US 20040142766A1

(19) **United States**

(12) **Patent Application Publication** (10) **Pub. No.: US 2004/0142766 A1**

Savarese et al. (43) **Pub. Date: Jul. 22, 2004**

(54) **APPARATUSES, METHODS AND SYSTEMS RELATING TO FINDABLE GOLF BALLS**

(76) Inventors: **Chris Savarese**, Danville, CA (US); **Lauro C. Cadorniga**, Piedmont, SC (US); **Forrest F. Fulton**, Los Altos Hills, CA (US); **Noel H.C. Marshall**, Gerringong (AU); **John Glissman**, Valley Ford, CA (US); **Kenneth P. Gilliland**, Petaluma, CA (US); **Marvin L. Vickers**, Quincy, CA (US); **Gerald Latus**, Los Gatos, CA (US)

Correspondence Address:
James C. Scheller, Jr.
BLAKELY, SOKOLOFF, TAYLOR & ZAFMAN LLP
Seventh Floor
12400 Wilshire Boulevard
Los Angeles, CA 90025-1026 (US)

(21) Appl. No.: **10/346,919**

(22) Filed: **Jan. 17, 2003**

Publication Classification

(51) **Int. Cl.**[7] **A63B 43/00**

(52) **U.S. Cl.** **473/353**

(57) **ABSTRACT**

Golf balls and a system for finding golf balls and methods for making golf balls and methods for using such balls. In the case of one exemplary golf ball, the ball includes a shell and a core material which is encased in the shell and a tag which is disposed within the core material and which has at least one perforation. The tag includes a diode and an antenna which are coupled together. Another exemplary golf ball includes a shell and a core material which is encased within the shell and a tag which is within the core material and which includes an electrical element which is coupled to an antenna; the tag is detectable over a range of at least 20 feet from a handheld device, and the golf ball has high durability and substantially complies with the golf ball specifications of the United States Golf Association.

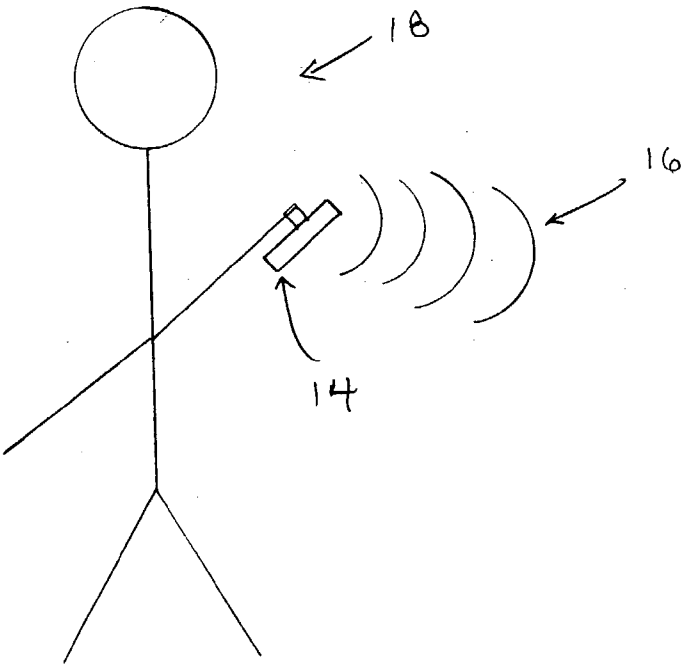

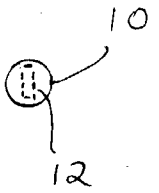

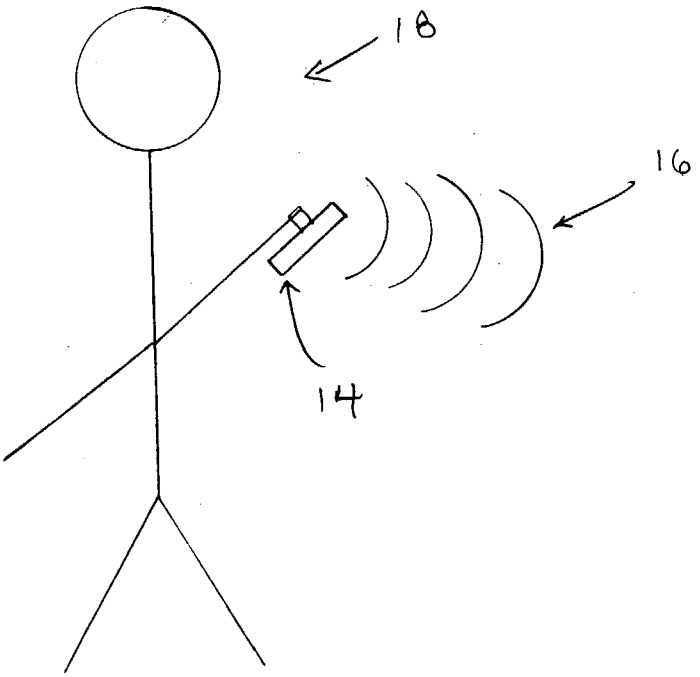

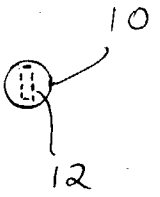

Fig. 1A

Fig. 1B

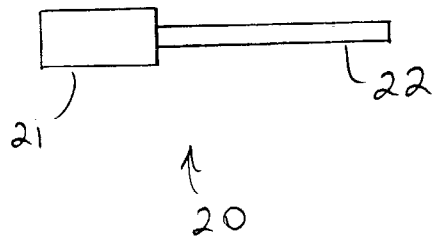

Fig. 1C

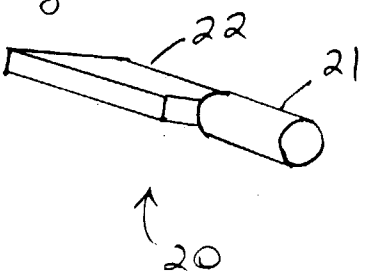

Fig. 2A

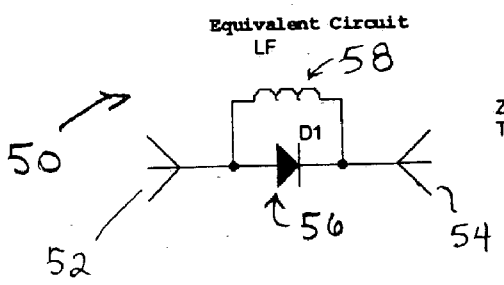

Fig. 2B

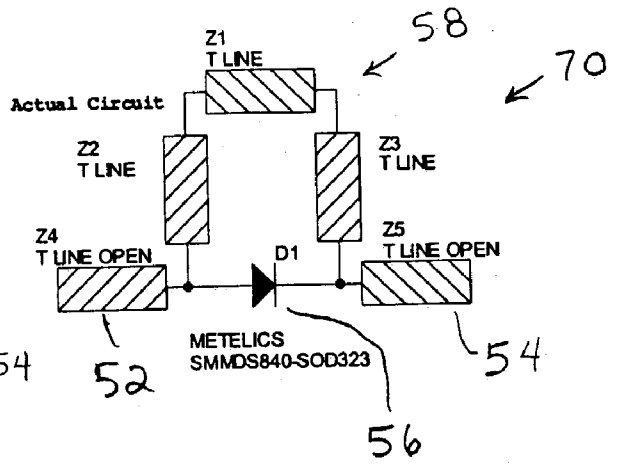

Fig. 2C

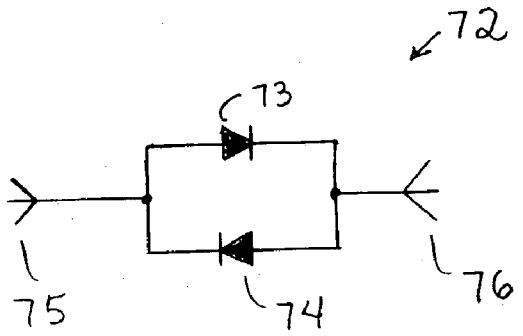

Fig. 2D

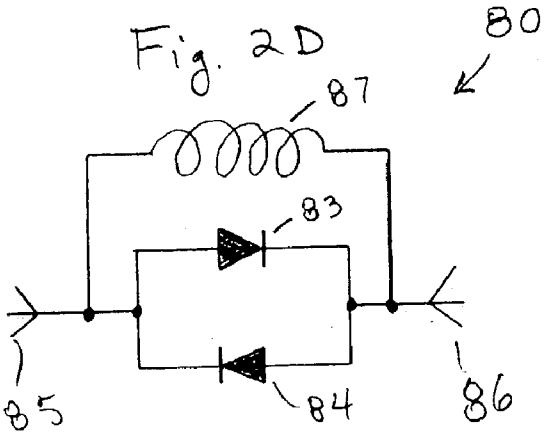

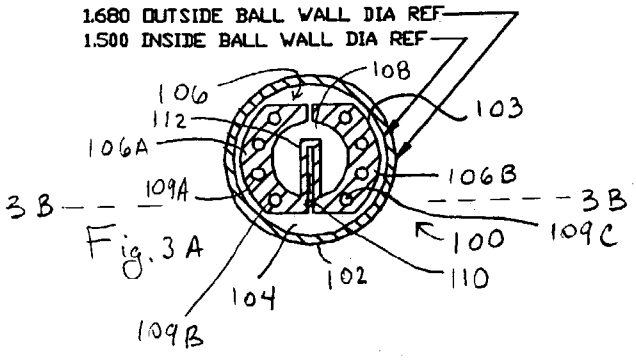

Fig. 3A

Fig. 3C

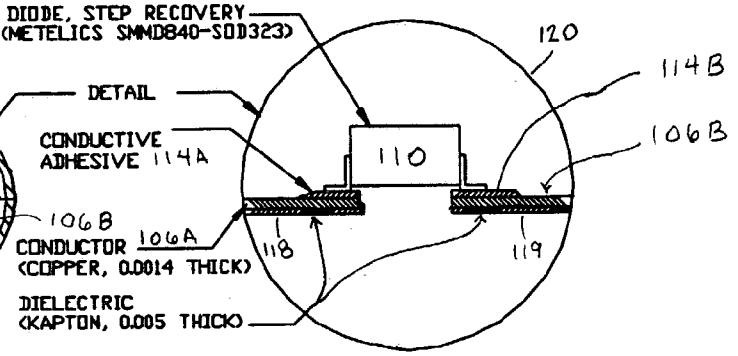

Fig. 3B

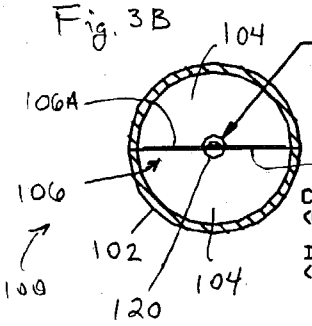

Fig. 3D

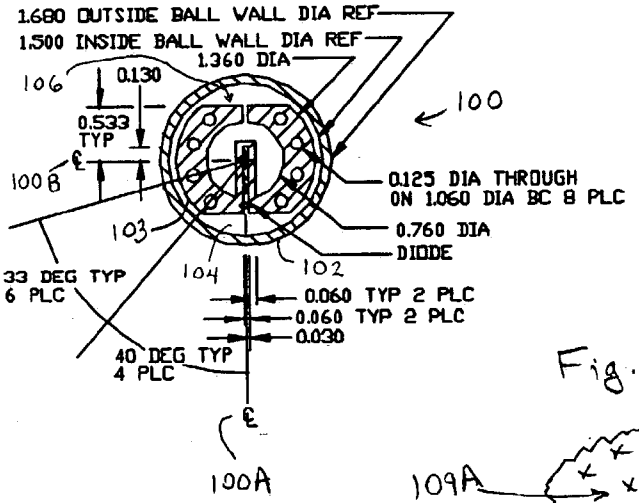

Fig. 3E

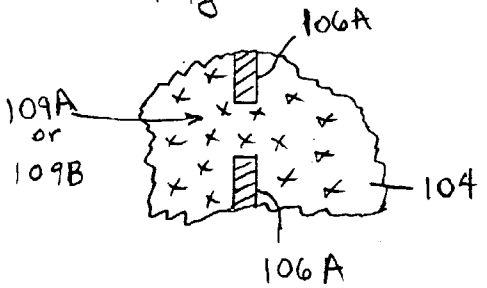

Fig. 4A

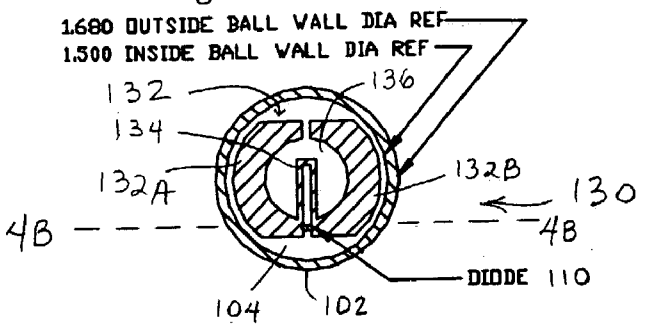

Fig. 4C

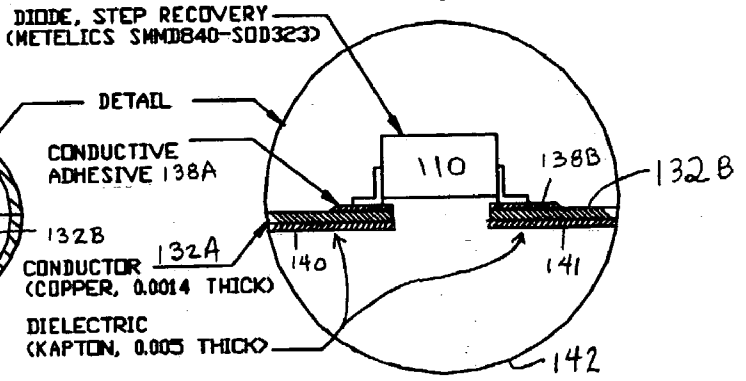

Fig. 4B

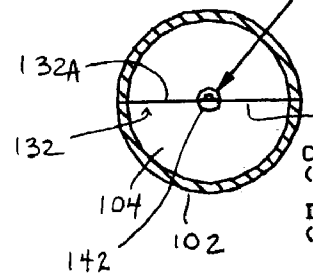

Fig. 4D

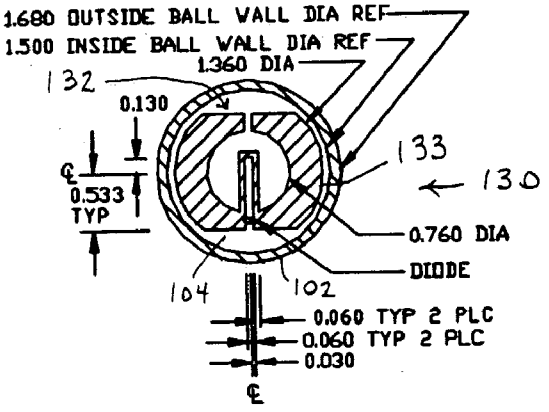

Fig. 5A

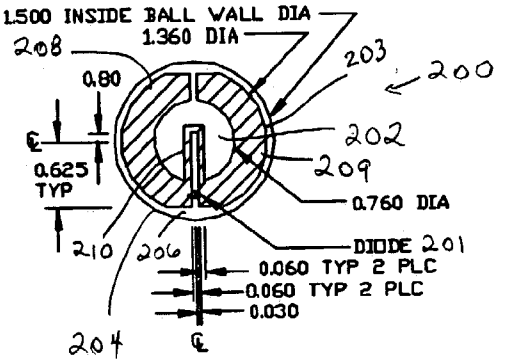

Fig. 5B

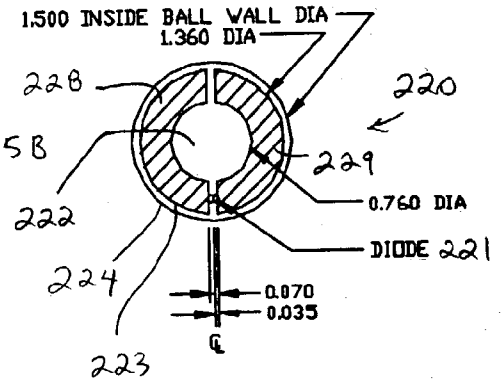

Fig. 5C

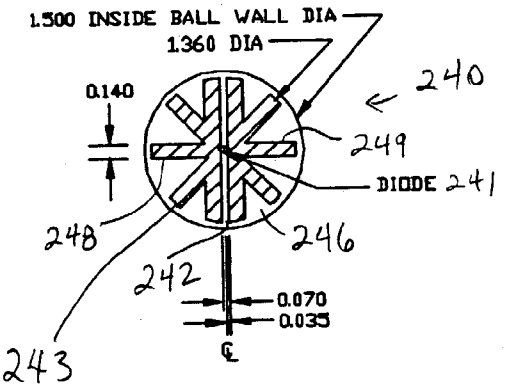

Fig. 5D

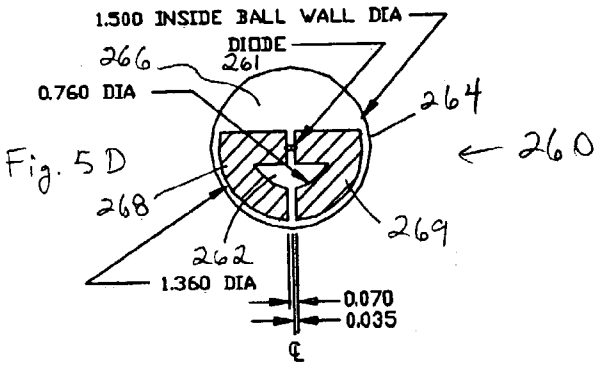

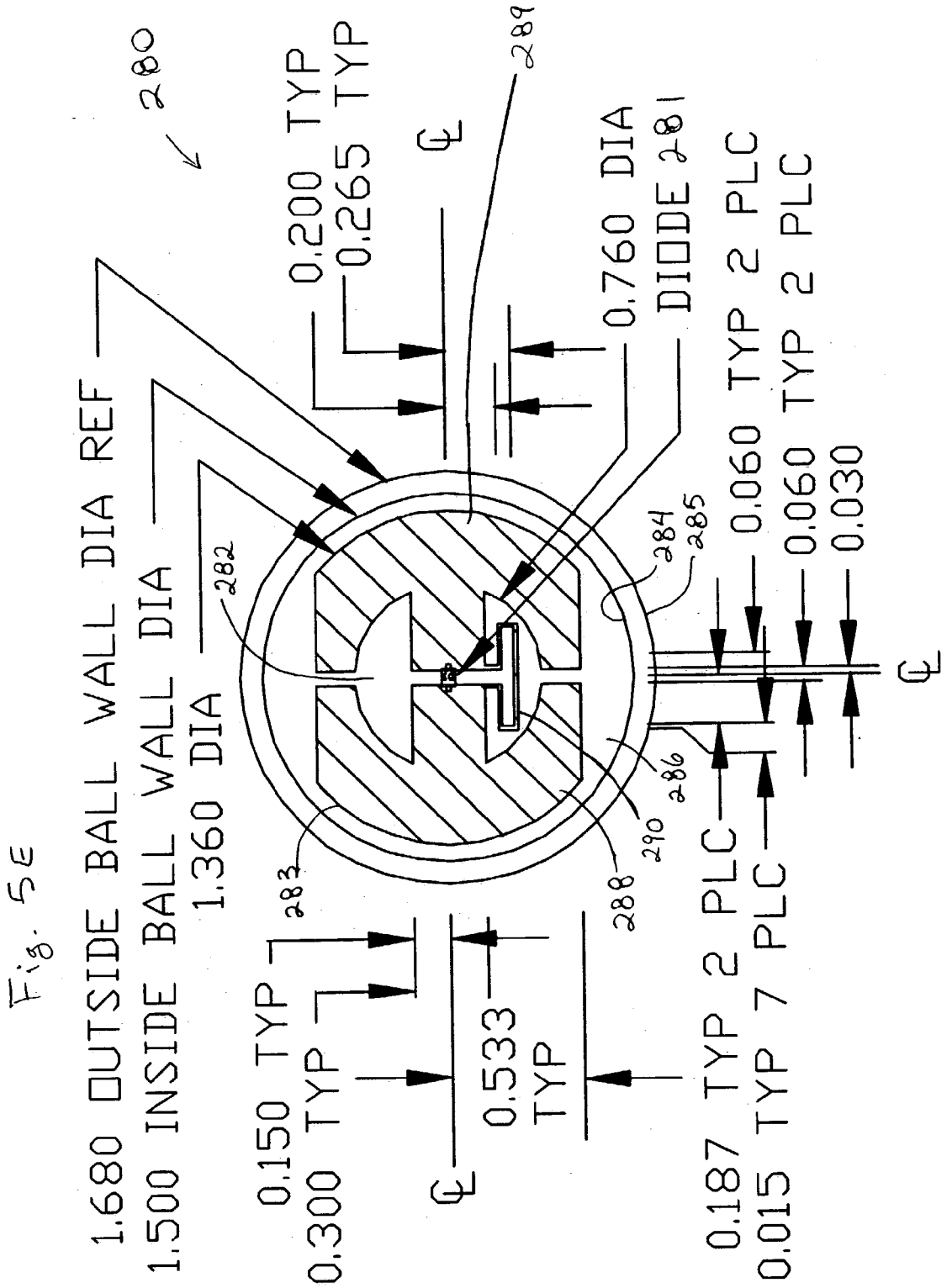
280
1.680 OUTSIDE BALL WALL DIA REF
1.500 INSIDE BALL WALL DIA
1.360 DIA
0.200 TYP
0.265 TYP
0.760 DIA
DIODE 281
0.150 TYP
0.300 TYP
0.533 TYP
0.187 TYP 2 PLC
0.015 TYP 7 PLC
0.060 TYP 2 PLC
0.060 TYP 2 PLC
0.030
282
283
284
285
286
288
289
290

Fig. 5E

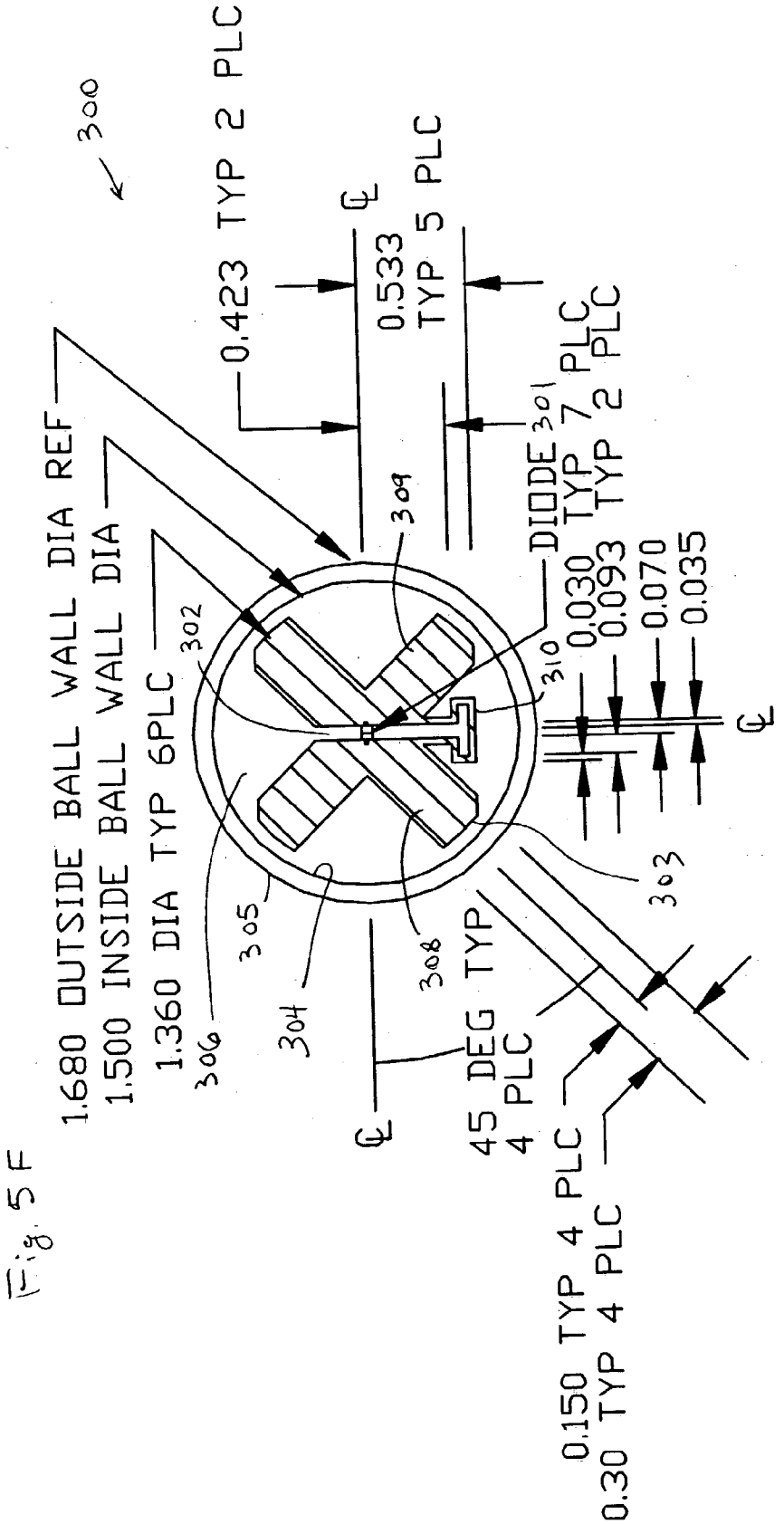
300
1.680 OUTSIDE BALL WALL DIA REF
1.500 INSIDE BALL WALL DIA
1.360 DIA TYP 6PLC
306
302
305
304
308
309
310
303
0.423 TYP 2 PLC
0.533 TYP 5 PLC
DIODE 301
0.030 TYP 7 PLC
0.093 TYP 2 PLC
0.070
0.035
45 DEG TYP 4 PLC
0.150 TYP 4 PLC
0.30 TYP 4 PLC

Fig. 5F

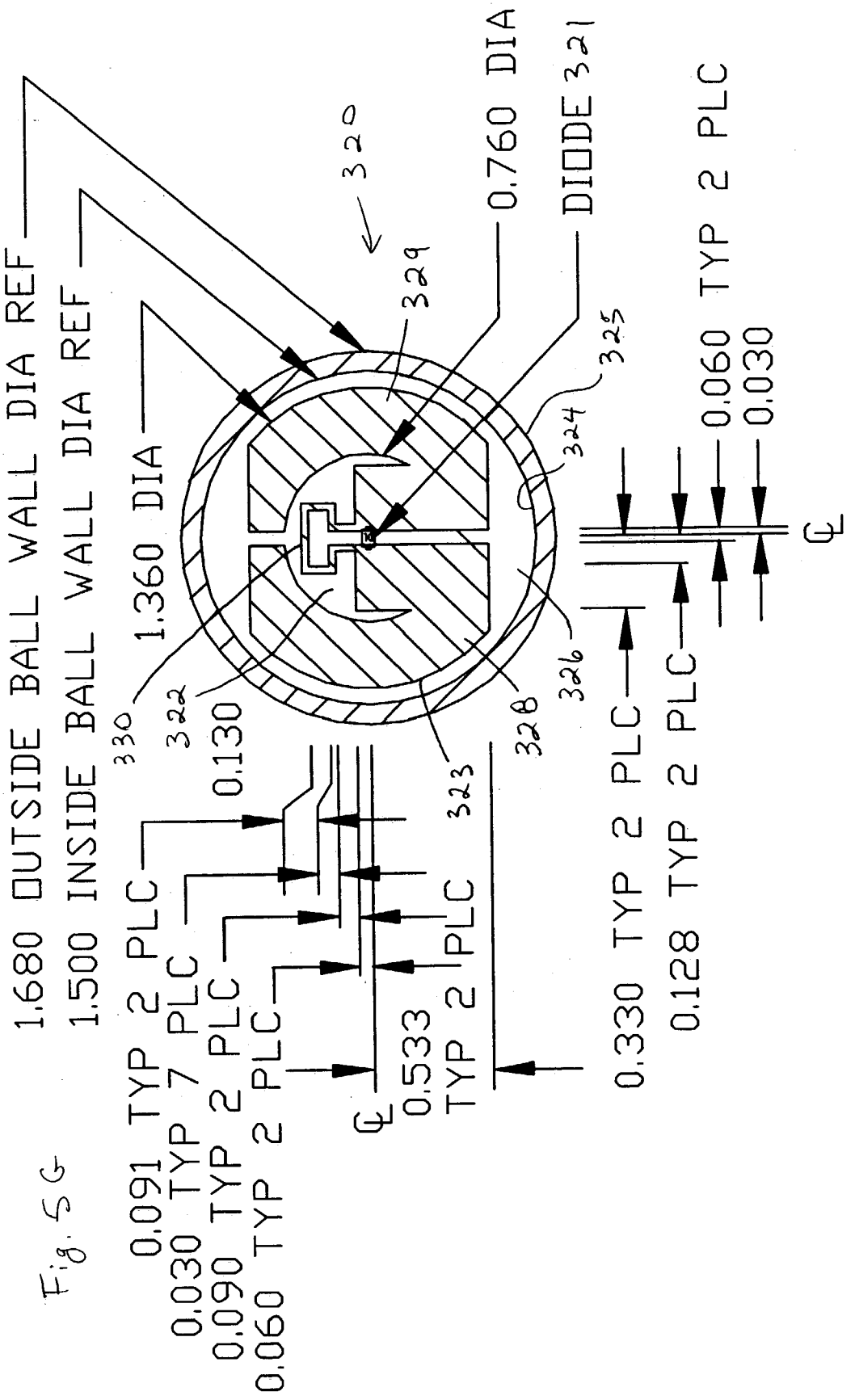
1,680 OUTSIDE BALL WALL DIA REF
1,500 INSIDE BALL WALL DIA REF
1.360 DIA
0.760 DIA
DIODE 321
320
329
325
324
326
328
322
330
323
0.130
0.091 TYP 2 PLC
0.030 TYP 7 PLC
0.090 TYP 2 PLC
0.060 TYP 2 PLC
0.533 TYP 2 PLC
0.330 TYP 2 PLC
0.128 TYP 2 PLC
0.060
0.030
℄

Fig. 5G

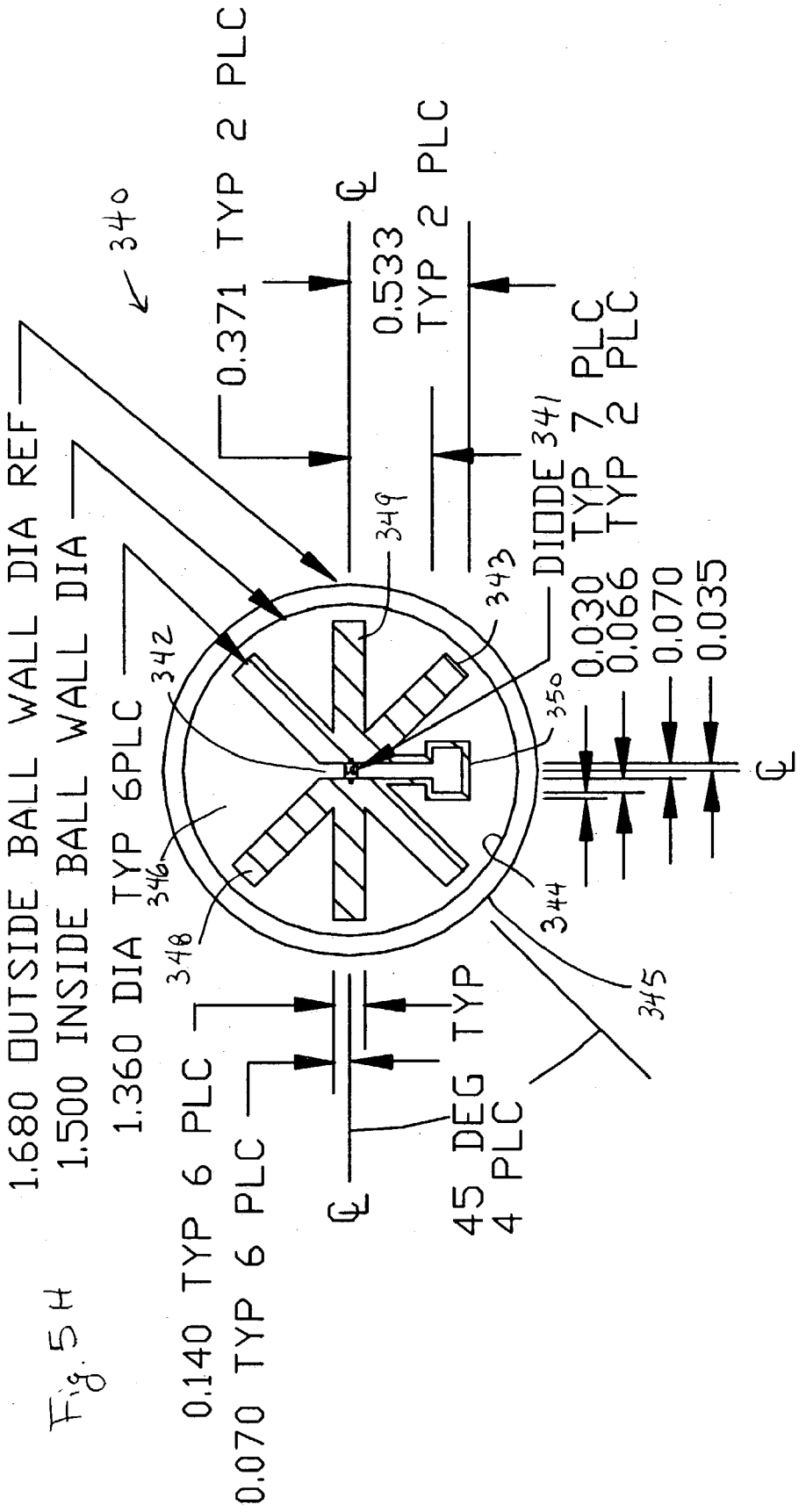
1.680 OUTSIDE BALL WALL DIA REF
1.500 INSIDE BALL WALL DIA
1.360 DIA TYP 6PLC
0.140 TYP 6 PLC
0.070 TYP 6 PLC
45 DEG TYP
4 PLC
0.371 TYP 2 PLC
0.533
TYP 2 PLC
DIODE
0.030 TYP 7 PLC
0.066 TYP 2 PLC
0.070
0.035
340
341
342
343
344
345
346
348
349
350

Fig. 5H

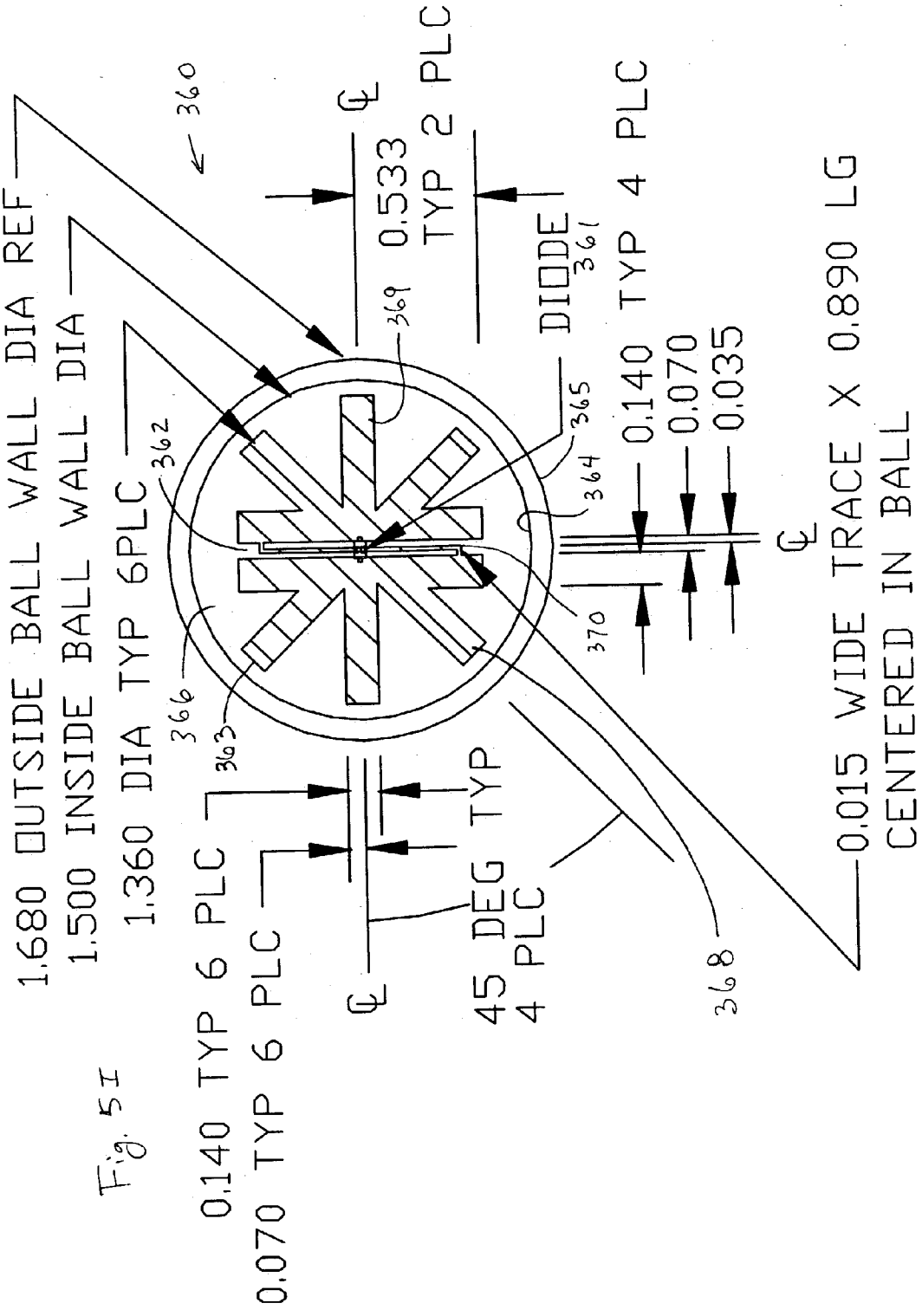
1.680 OUTSIDE BALL WALL DIA REF
1.500 INSIDE BALL WALL DIA
1.360 DIA TYP 6PLC
0.140 TYP 6 PLC
0.070 TYP 6 PLC
45 DEG TYP
4 PLC
0.533
TYP 2 PLC
DIODE
0.140 TYP 4 PLC
0.070
0.035
0.015 WIDE TRACE X 0.890 LG
CENTERED IN BALL
360
361
362
363
364
365
366
368
369
370

Fig. 5I

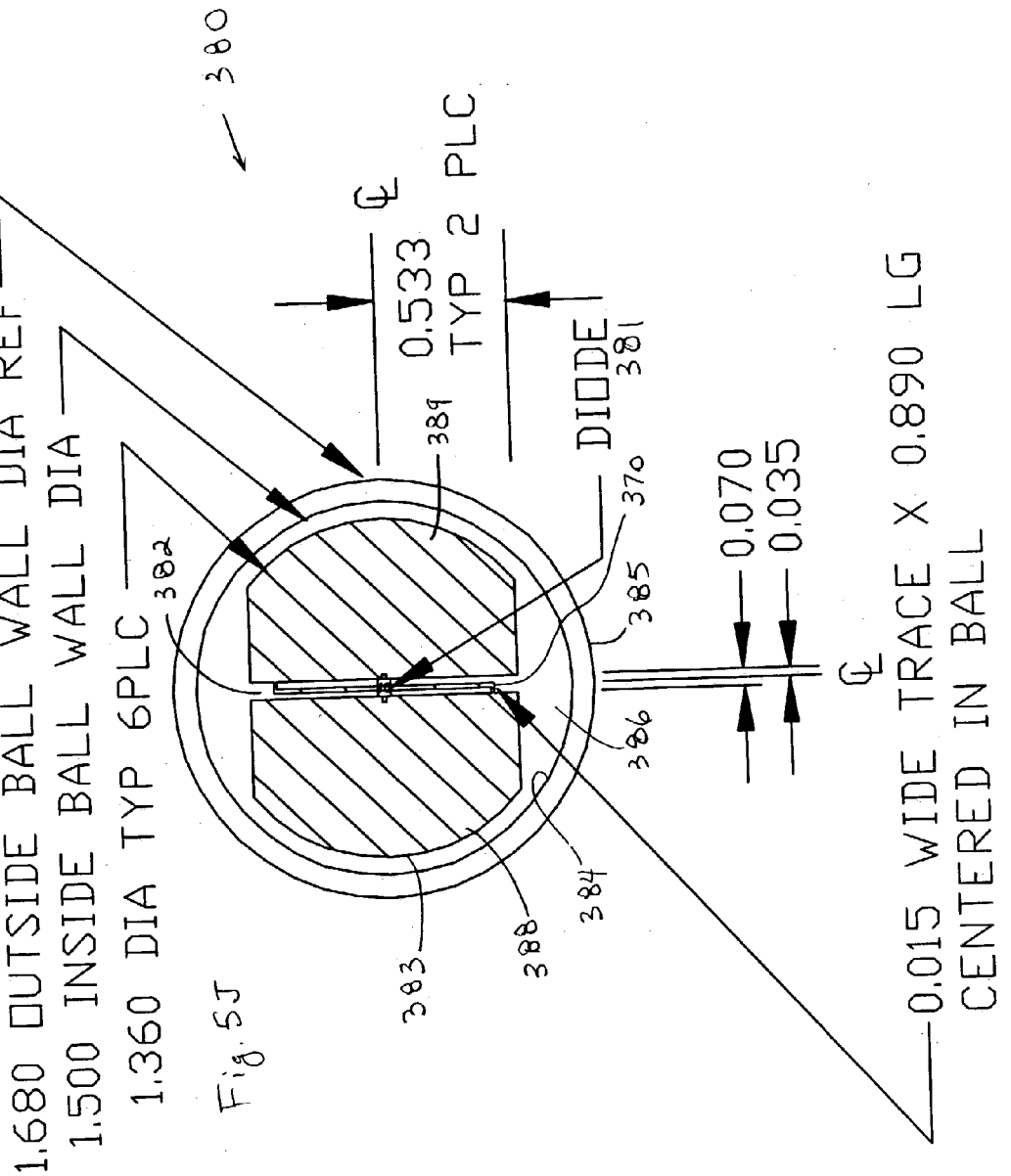
380
1.680 OUTSIDE BALL WALL DIA REF
1.500 INSIDE BALL WALL DIA
1.360 DIA TYP 6PLC
382
0.533
TYP 2 PLC
389
DIODE
381
370
385
0.070
0.035
386
383
388
384
0.015 WIDE TRACE X 0.890 LG
CENTERED IN BALL

Fig. 5J

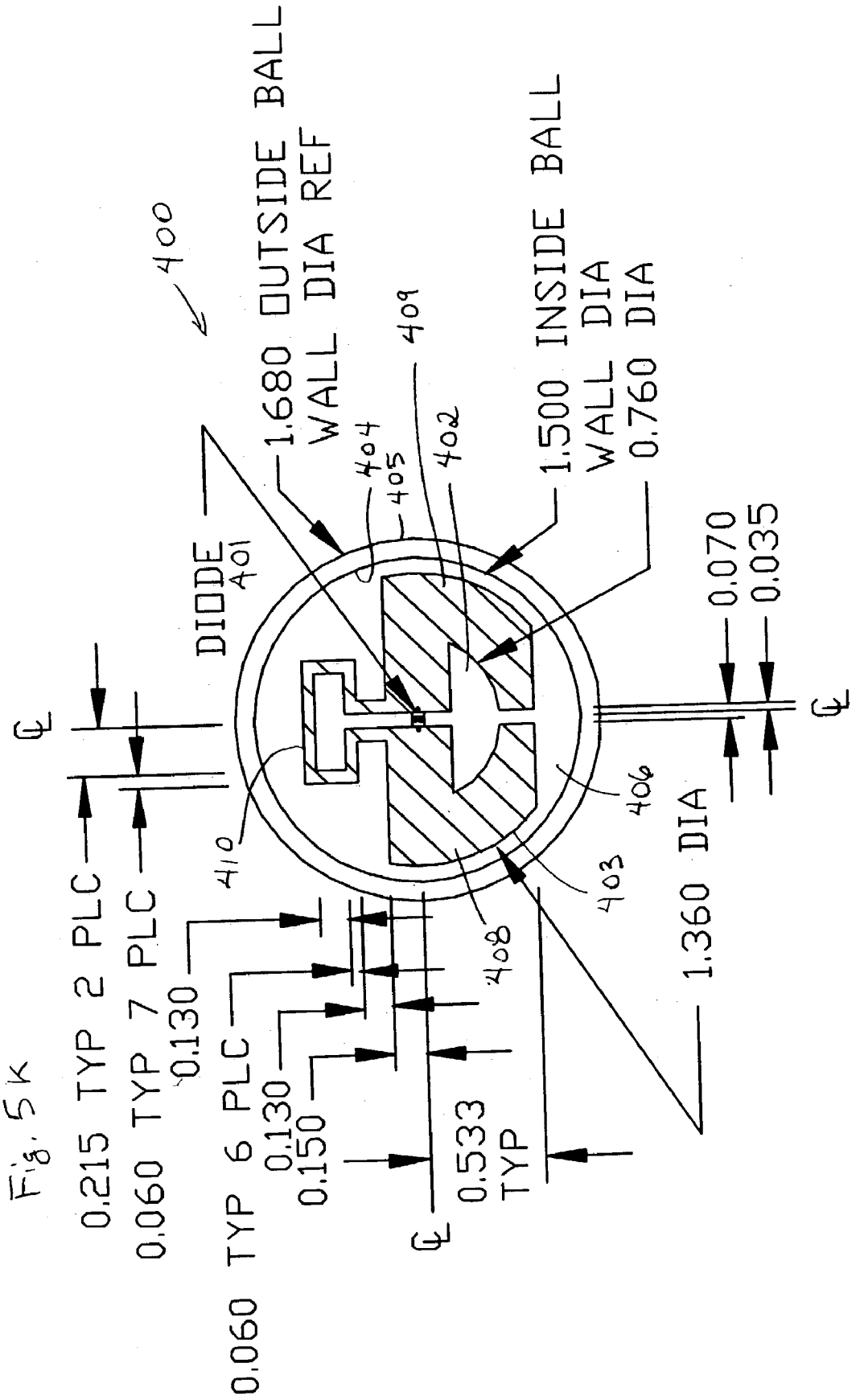
400
1.680 OUTSIDE BALL
WALL DIA REF
1.500 INSIDE BALL
WALL DIA
0.760 DIA
DIODE
401
409
404
405
402
406
403
408
410
0.070
0.035
1.360 DIA
0.215 TYP 2 PLC
0.060 TYP 7 PLC
0.130
0.060 TYP 6 PLC
0.130
0.150
0.533
TYP

Fig. 5K

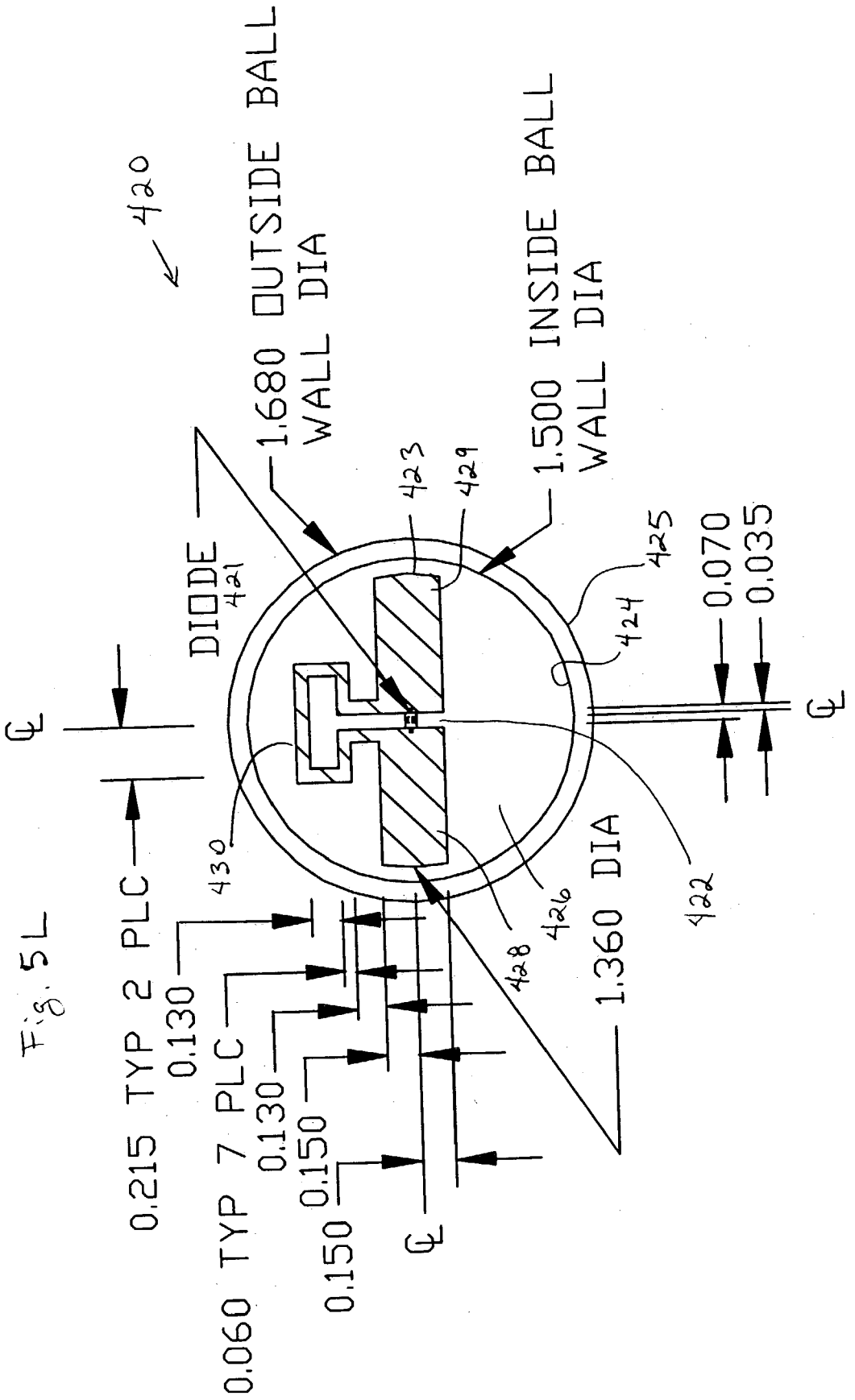
420
1.680 OUTSIDE BALL
WALL DIA
1.500 INSIDE BALL
WALL DIA
DIODE
421
423
429
425
424
0.070
0.035
430
422
426
428
1.360 DIA
0.215 TYP 2 PLC
0.130
0.060 TYP 7 PLC
0.130
0.150
0.150

Fig. 5L

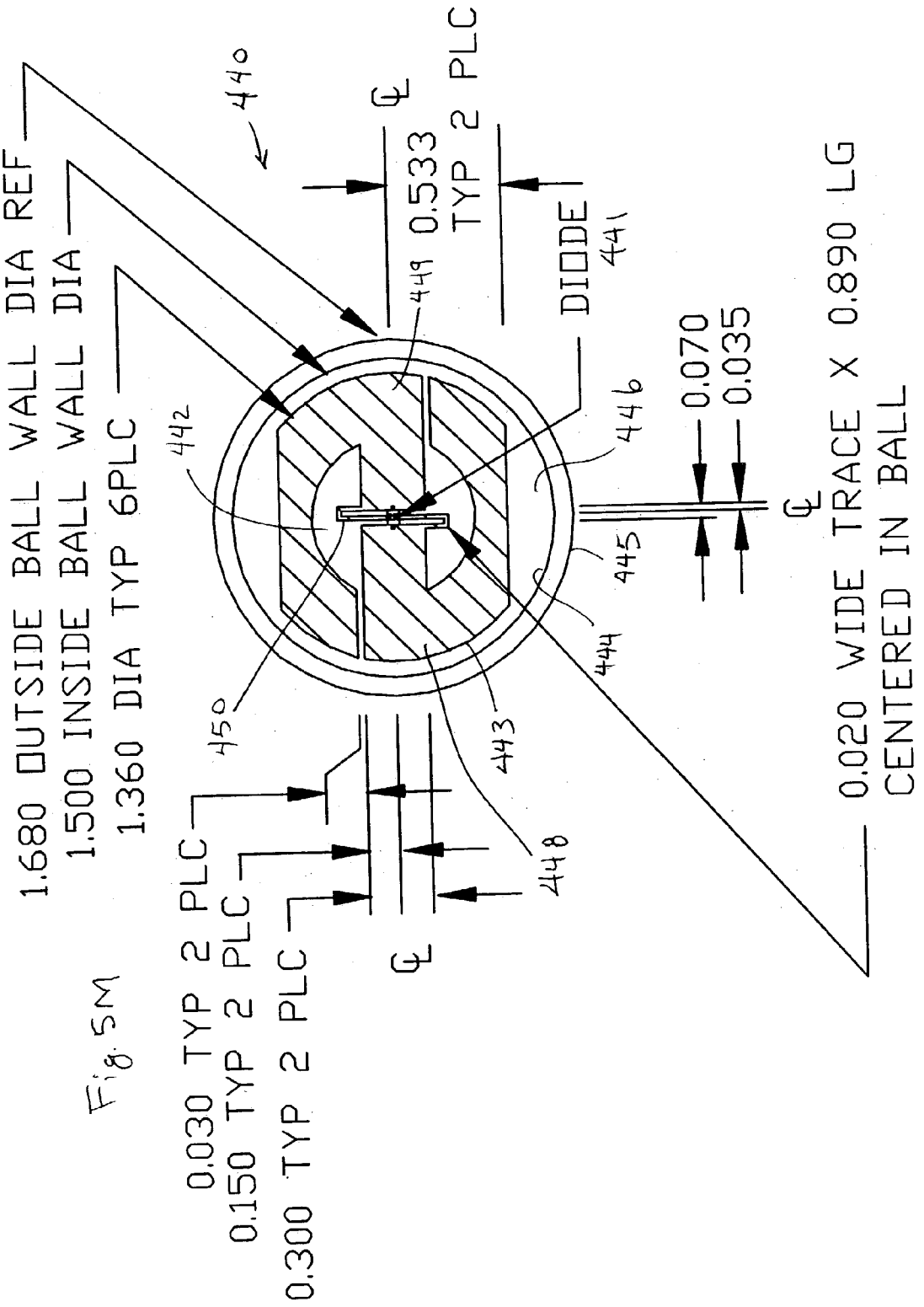
1.680 OUTSIDE BALL WALL DIA REF
1.500 INSIDE BALL WALL DIA
1.360 DIA TYP 6PLC
0.030 TYP 2 PLC
0.150 TYP 2 PLC
0.300 TYP 2 PLC
0.533 TYP 2 PLC
DIODE
0.070
0.035
0.020 WIDE TRACE X 0.890 LG CENTERED IN BALL
440
441
442
443
444
445
446
448
449
450

Fig. 5M

Fig. 5N

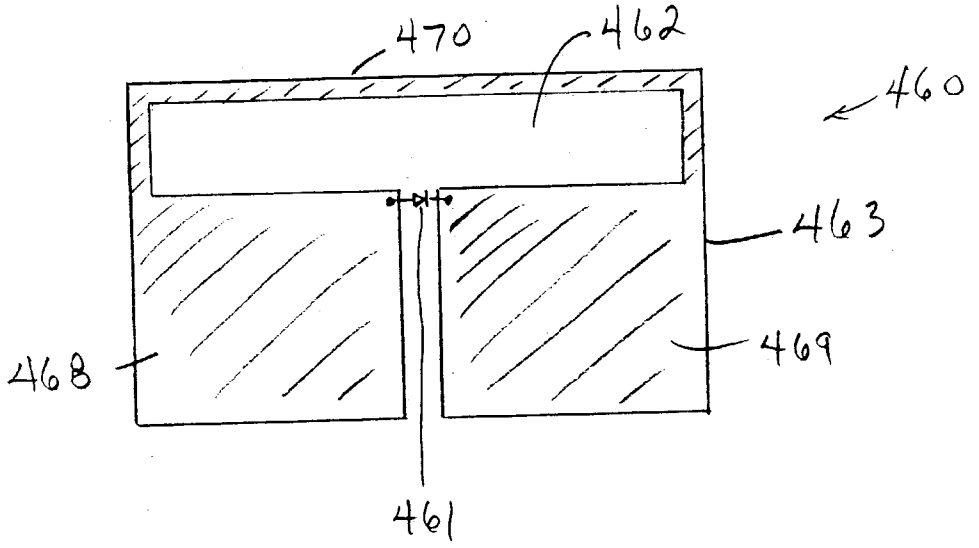
470
462
460
463
469
468
461

Fig. 5O

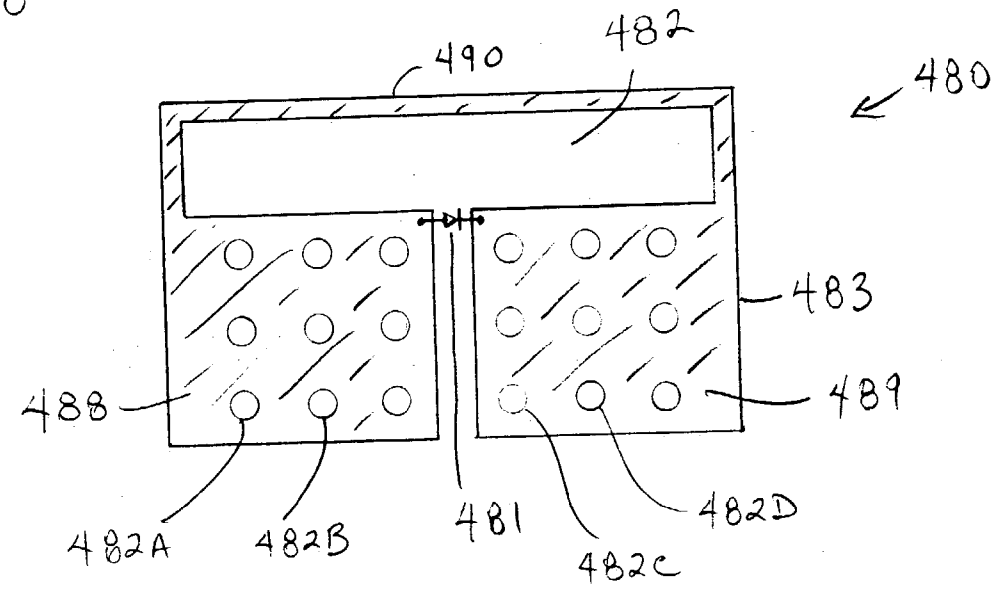
490
482
480
483
489
488
482A
482B
481
482C
482D

Fig. 5 P

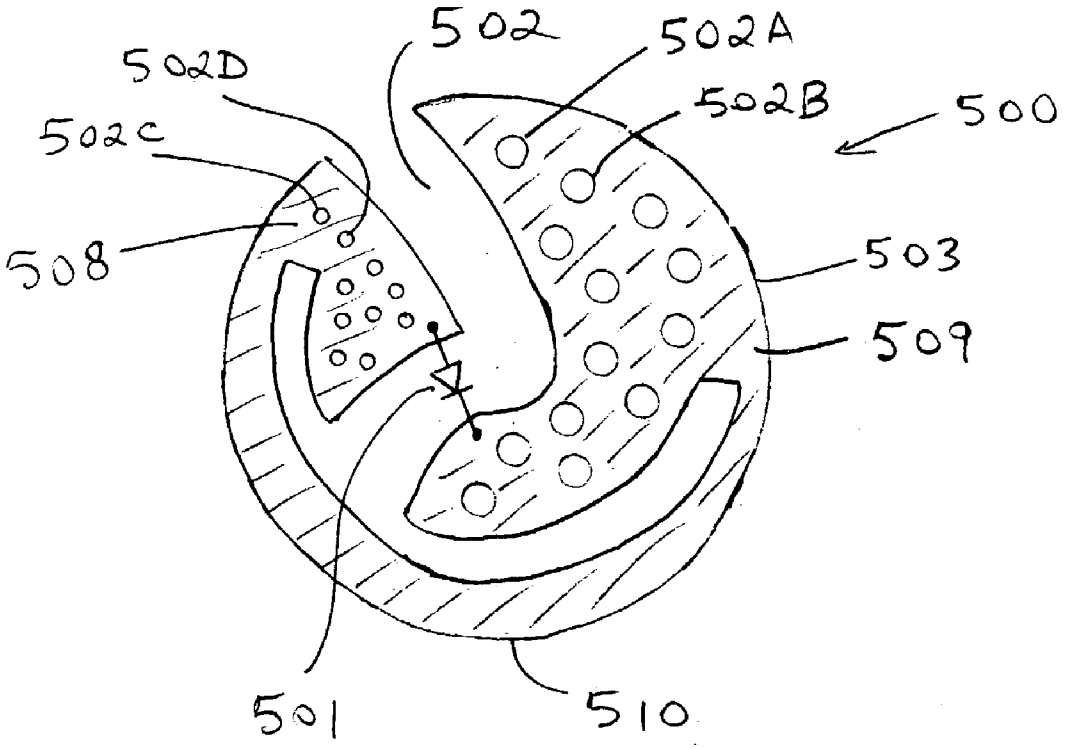

Fig. 6A

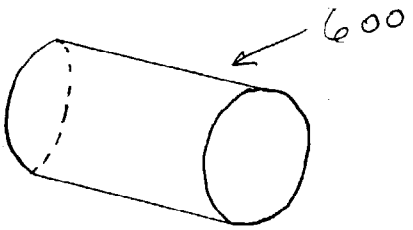

Fig. 6B

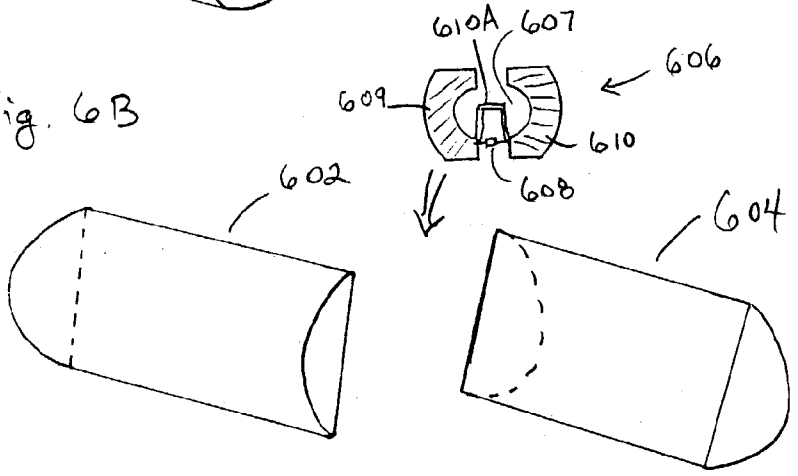

Fig. 6C

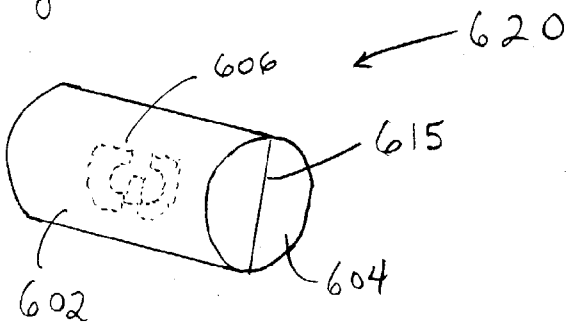

Fig. 6D

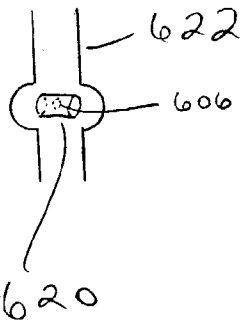

Fig. 6E

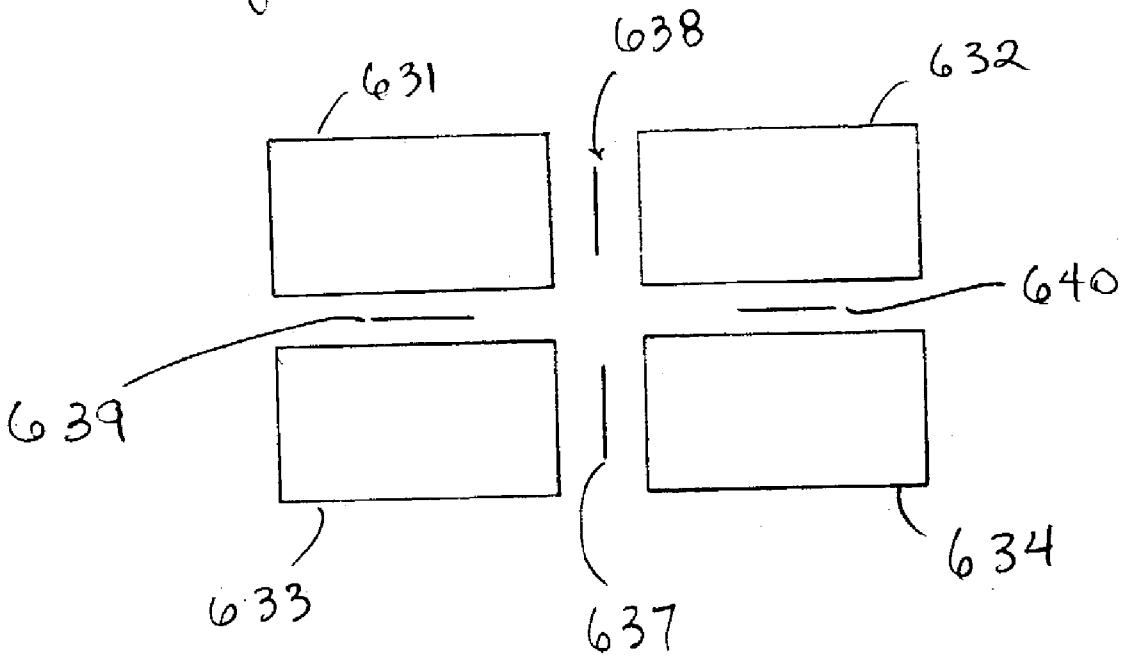

Fig. 7

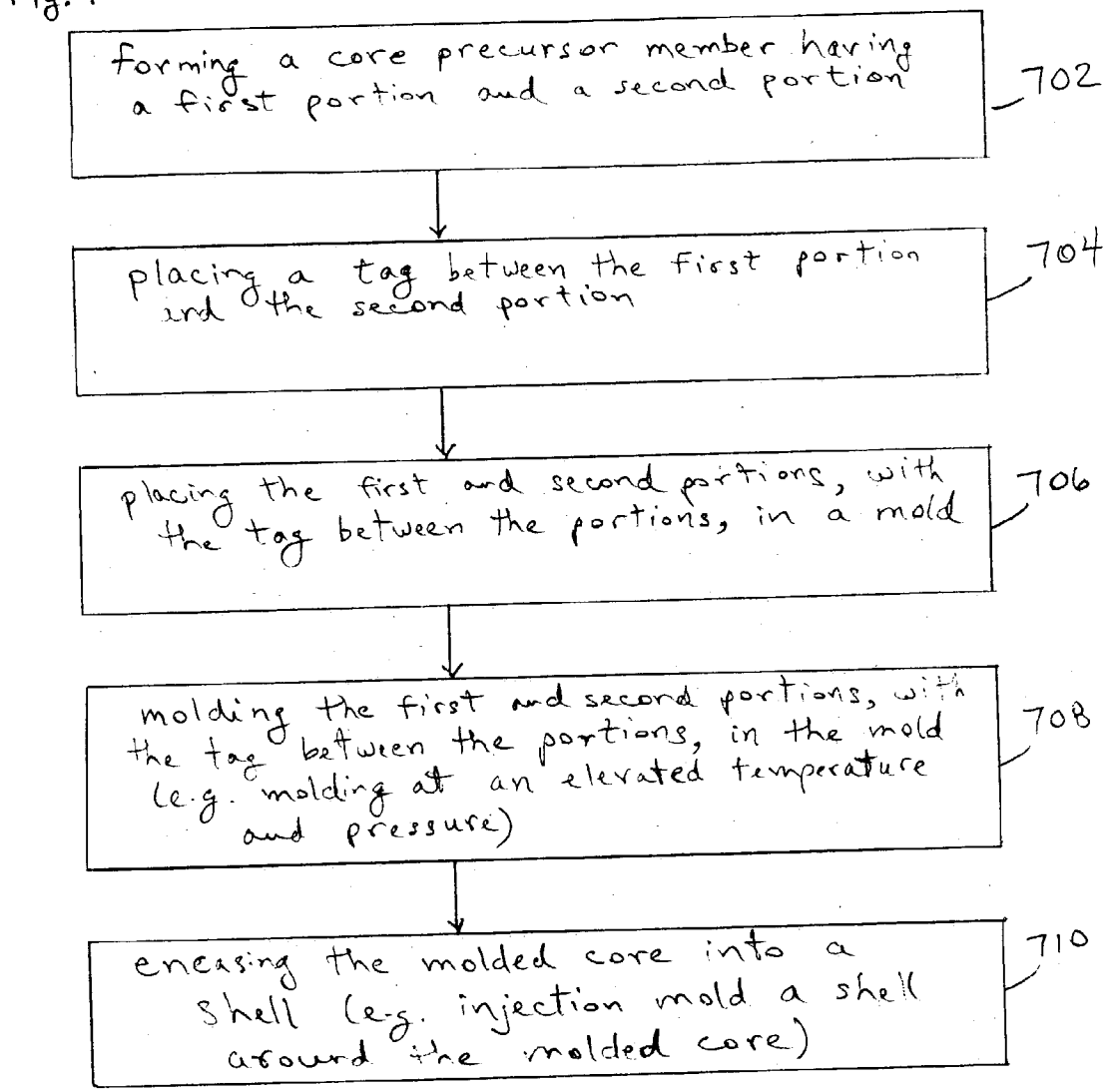
forming a core precursor member having a first portion and a second portion
702
placing a tag between the first portion and the second portion
704
placing the first and second portions, with the tag between the portions, in a mold
706
molding the first and second portions, with the tag between the portions, in the mold (e.g. molding at an elevated temperature and pressure)
708
encasing the molded core into a shell (e.g. injection mold a shell around the molded core)
710

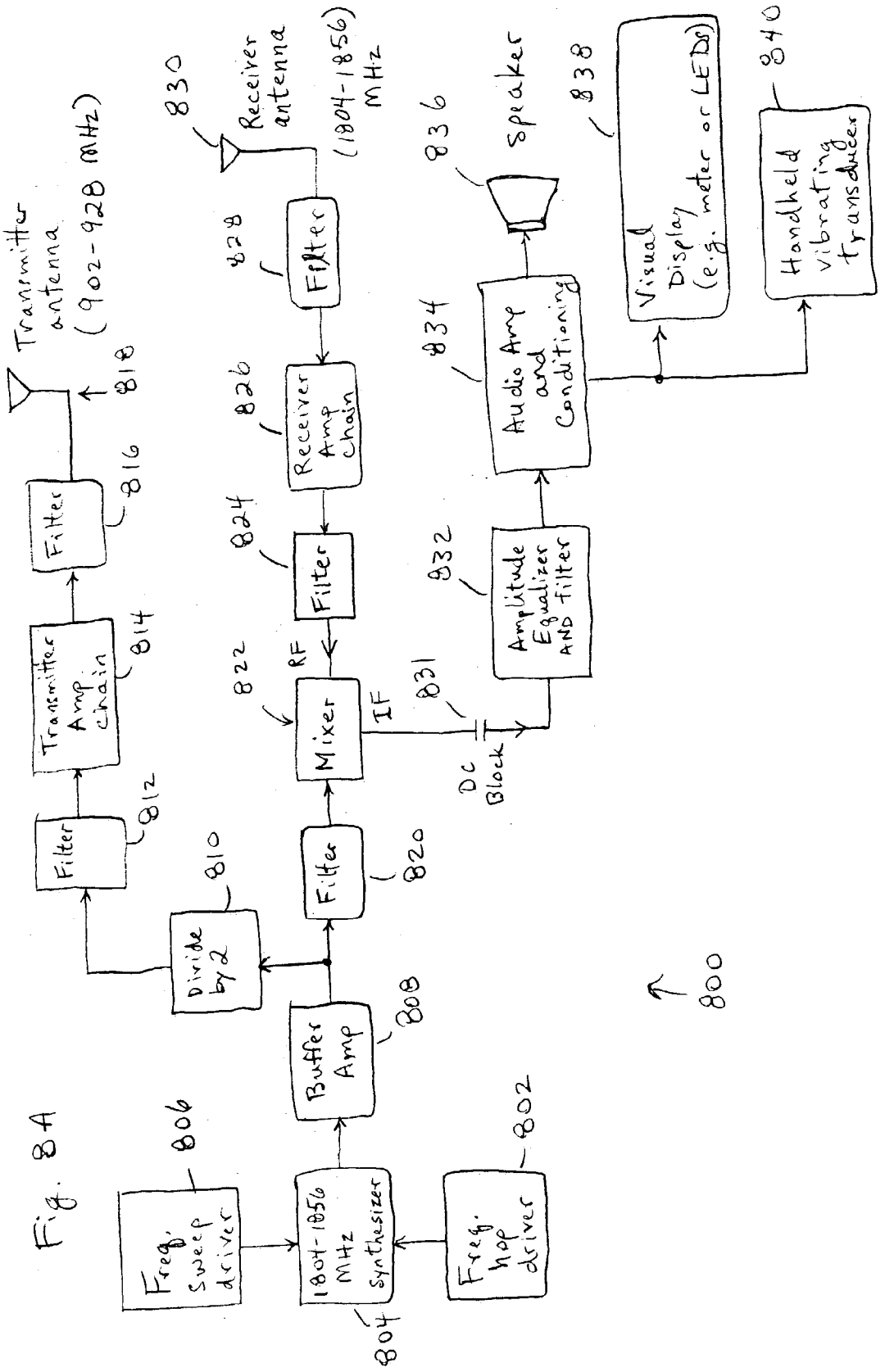
Freq. sweep driver
806
1804-1856 MHz synthesizer
804
Freq. hop driver
802
Buffer Amp
808
Divide by 2
810
Filter
812
Transmitter Amp chain
814
Filter
816
Transmitter antenna (902-928 MHz)
818
Filter
820
Mixer
822
RF
IF
831
DC Block
Filter
824
Receiver Amp chain
826
Filter
828
Receiver antenna
830
(1804-1856) MHz
Amplitude Equalizer AND filter
832
Audio Amp and Conditioning
834
Speaker
836
Visual Display (e.g. meter or LEDs)
838
Handheld vibrating transducer
840
800

Fig. 84

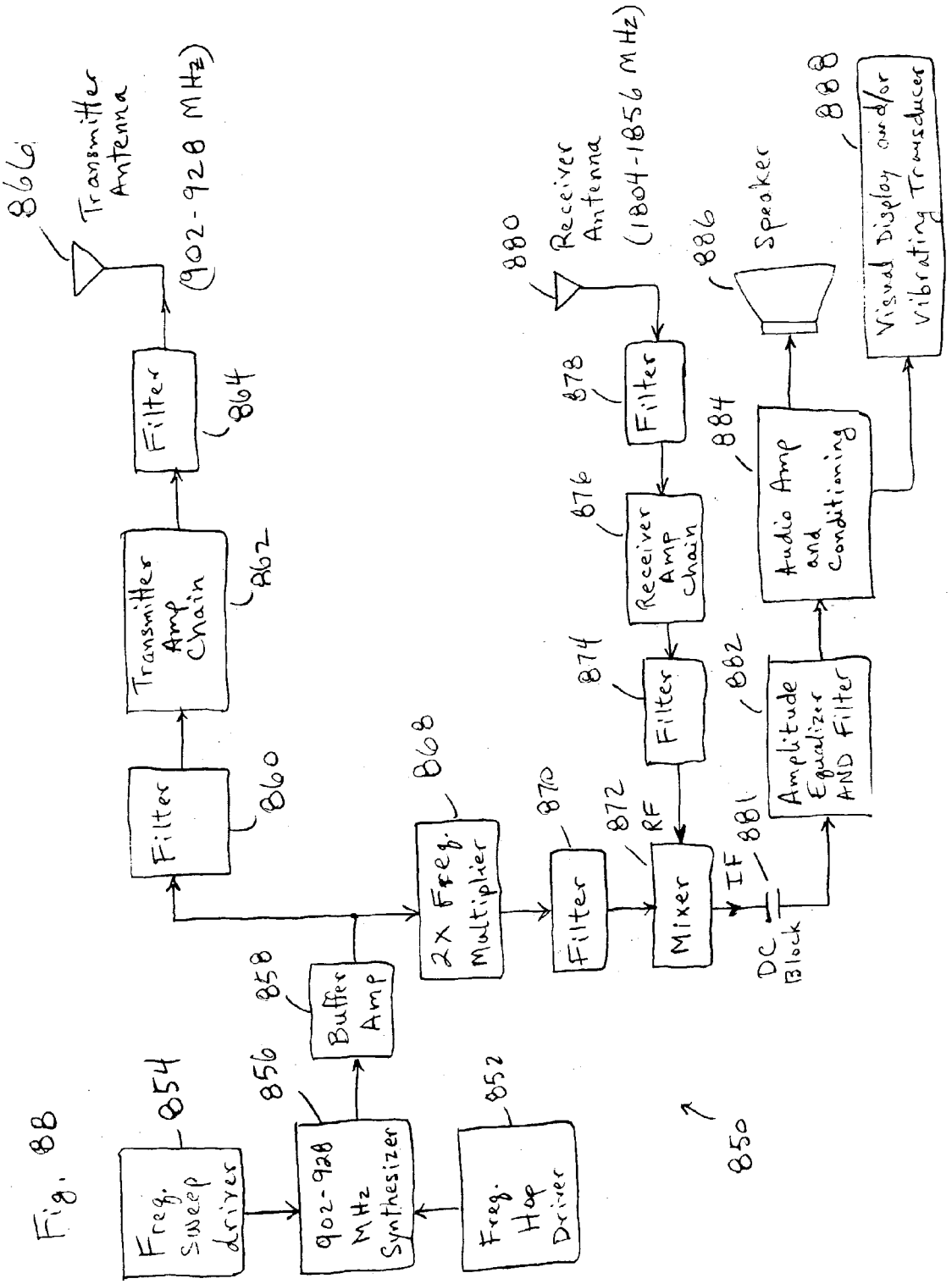
Fig. 88
850
Freq. Sweep driver
854
902-928 MHz Synthesizer
856
Freq. Hop Driver
852
Buffer Amp
858
2X Freq. Multiplier
868
Filter
860
Transmitter Amp Chain
862
Filter
864
Transmitter Antenna
866
(902-928 MHz)
Filter
870
Filter
872
RF
Mixer
IF
881
DC Block
Filter
874
Receiver Amp Chain
876
Filter
878
Receiver Antenna
880
(1804-1856 MHz)
Amplitude Equalizer AND Filter
882
Audio Amp and Conditioning
884
Speaker
886
Visual Display and/or Vibrating Transducer
888

Fig. 8C

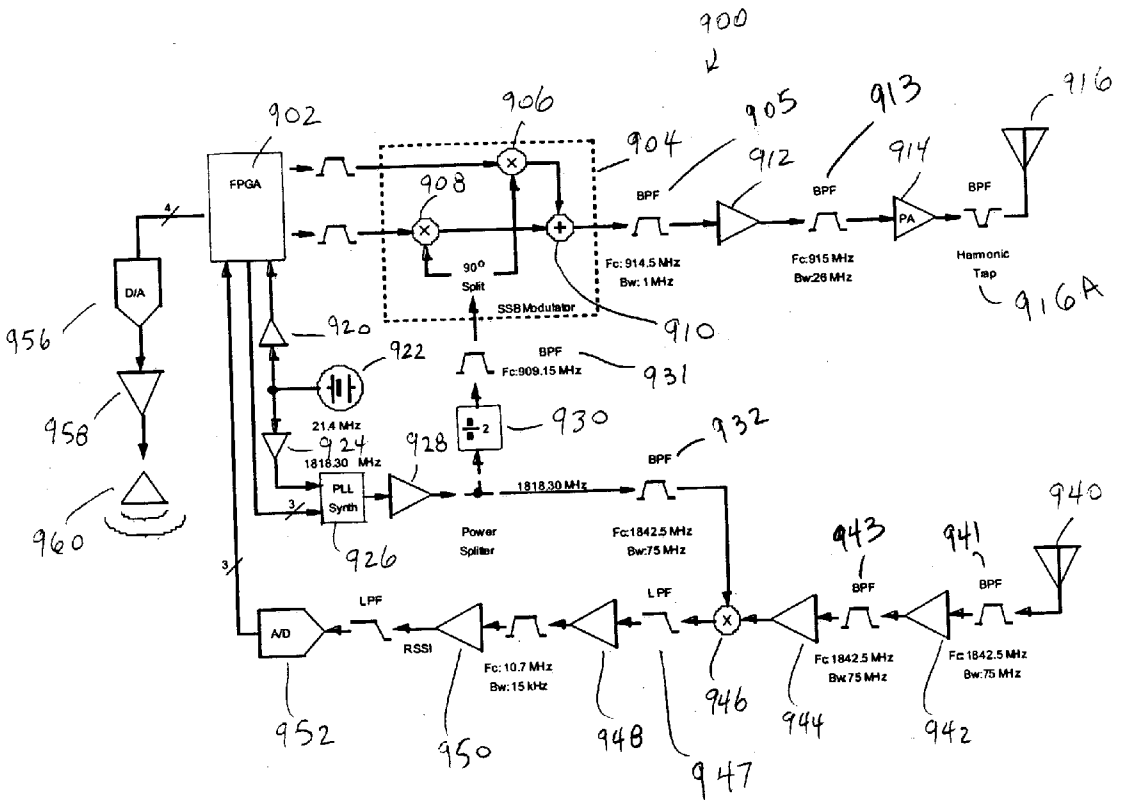
900
902
FPGA
906
904
905
913
916
908
912
914
BPF
BPF
BPF
PA
Fc: 914.5 MHz
Bw: 1 MHz
Fc:915 MHz
Bw:26 MHz
Harmonic
Trap
916A
90°
Split
SSB Modulator
910
D/A
956
920
922
BPF
Fc:909.15 MHz
931
958
21.4 MHz
924
930
1818.30 MHz
928
932
BPF
PLL
Synth
1818.30 MHz
960
926
Power
Splitter
Fc:1842.5 MHz
Bw:75 MHz
940
943
941
BPF
BPF
LPF
LPF
A/D
RSSI
Fc: 10.7 MHz
Bw: 15 kHz
Fc 1842.5 MHz
Bw:75 MHz
Fc 1842.5 MHz
Bw:75 MHz
952
950
948
946
944
942
947

Fig. 8D

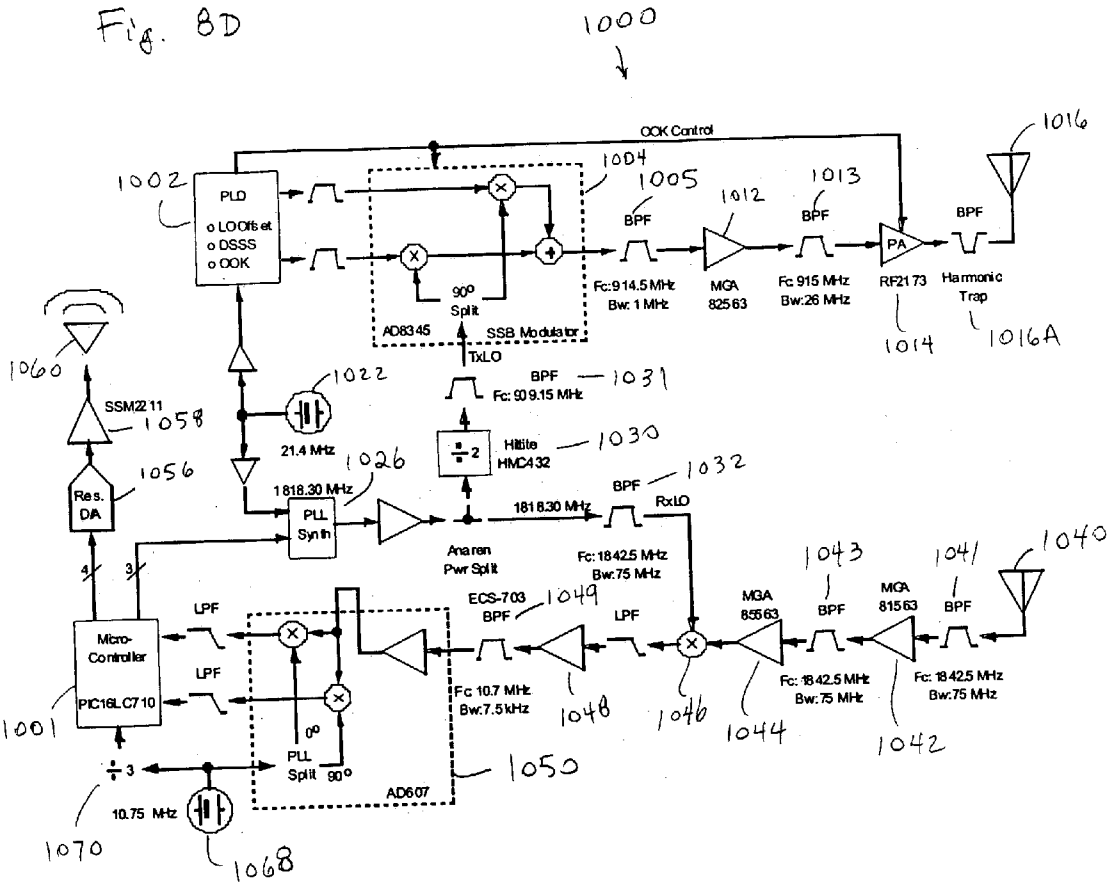
1000
OOK Control
1016
1002
PLD
o LO Offset
o DSSS
o OOK
1004
1005
1012
1013
BPF
BPF
BPF
PA
Fc: 914.5 MHz
Bw: 1 MHz
MGA
82563
Fc: 915 MHz
Bw: 26 MHz
RF2173
Harmonic
Trap
1014
1016A
90°
Split
AD8345
SSB Modulator
TxLO
1060
SSM2211
1058
1022
BPF
Fc: 909.15 MHz
1031
21.4 MHz
÷2
Hittite
HMC432
1030
1056
Res.
DA
1818.30 MHz
1026
PLL
Synth
1818.30 MHz
BPF
1032
RxLO
Anaren
Pwr Split
Fc: 1842.5 MHz
Bw: 75 MHz
1043
1041
1040
4
3
ECS-703
BPF
1049
LPF
MGA
85563
MGA
81563
BPF
BPF
LPF
LPF
Micro-
Controller
PIC16LC710
1001
Fc: 10.7 MHz
Bw: 7.5 kHz
1048
1046
1044
Fc: 1842.5 MHz
Bw: 75 MHz
Fc: 1842.5 MHz
Bw: 75 MHz
1042
0°
÷3
PLL
Split
90°
AD607
1050
10.75 MHz
1070
1068

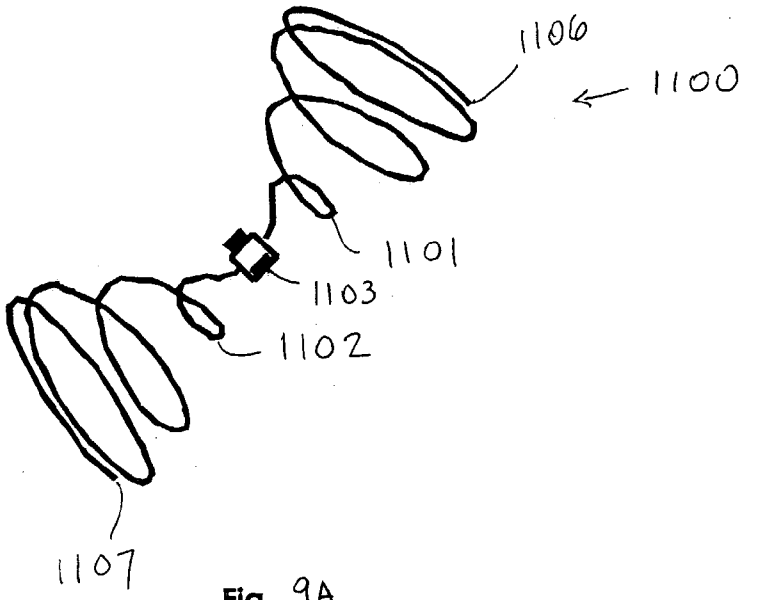

Fig. 9A

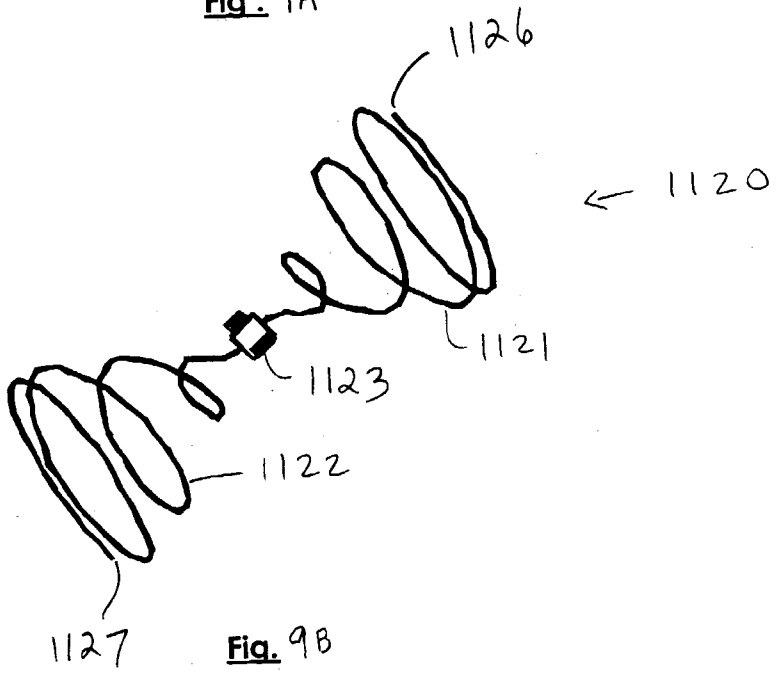

Fig. 9B

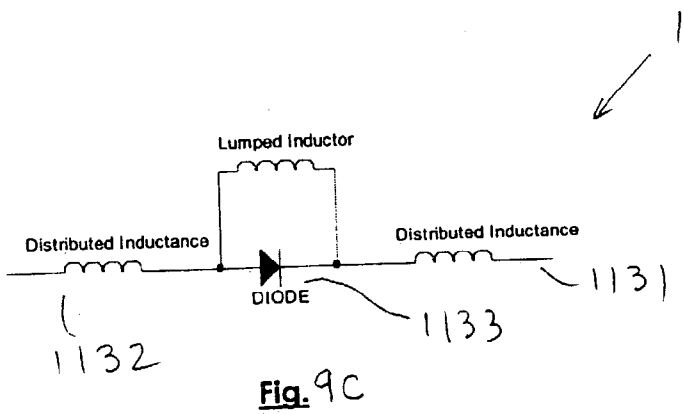

Fig. 9C

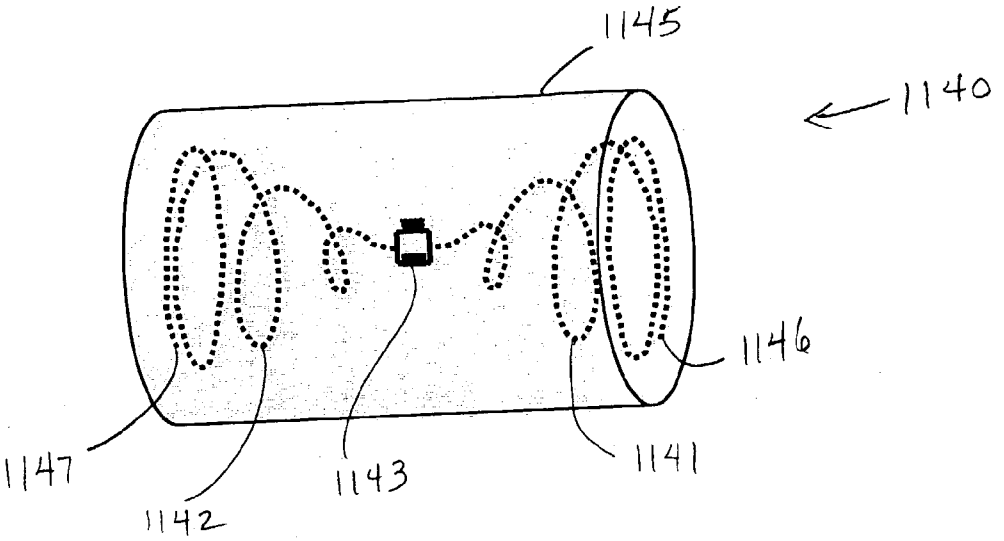

Fig. 9D

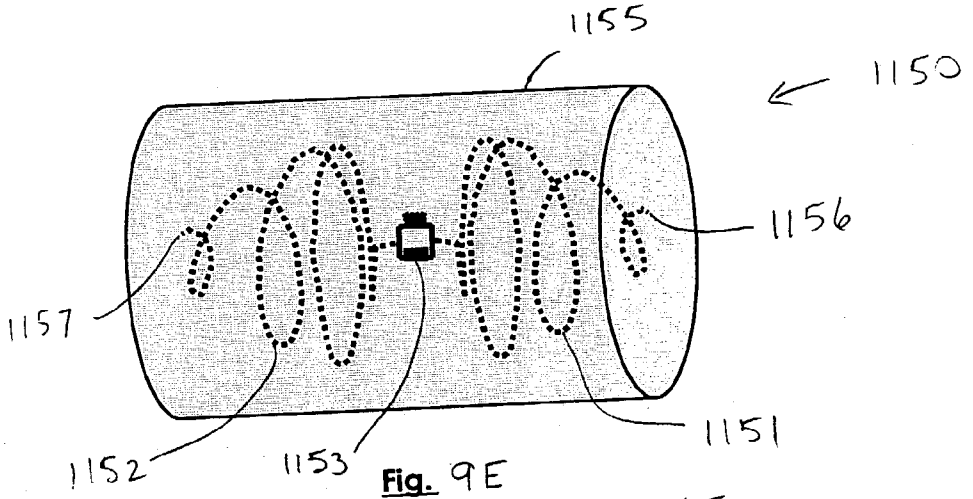

Fig. 9E

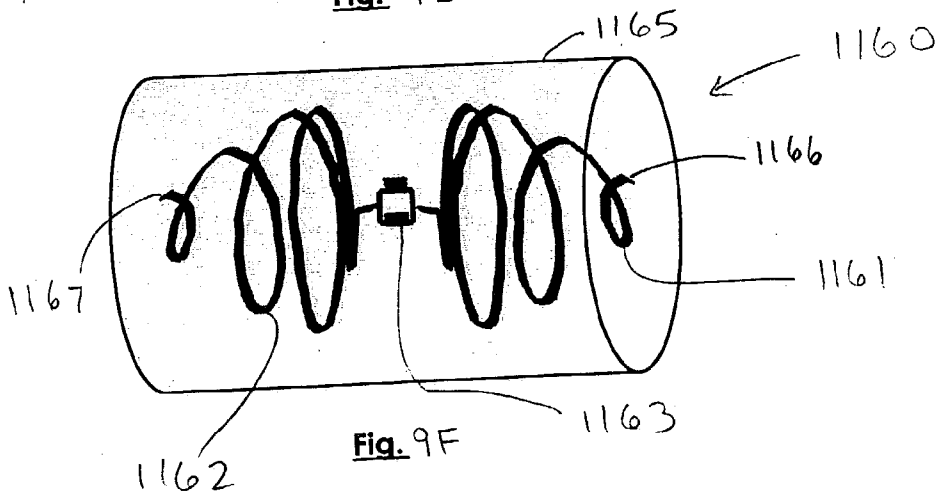

Fig. 9F

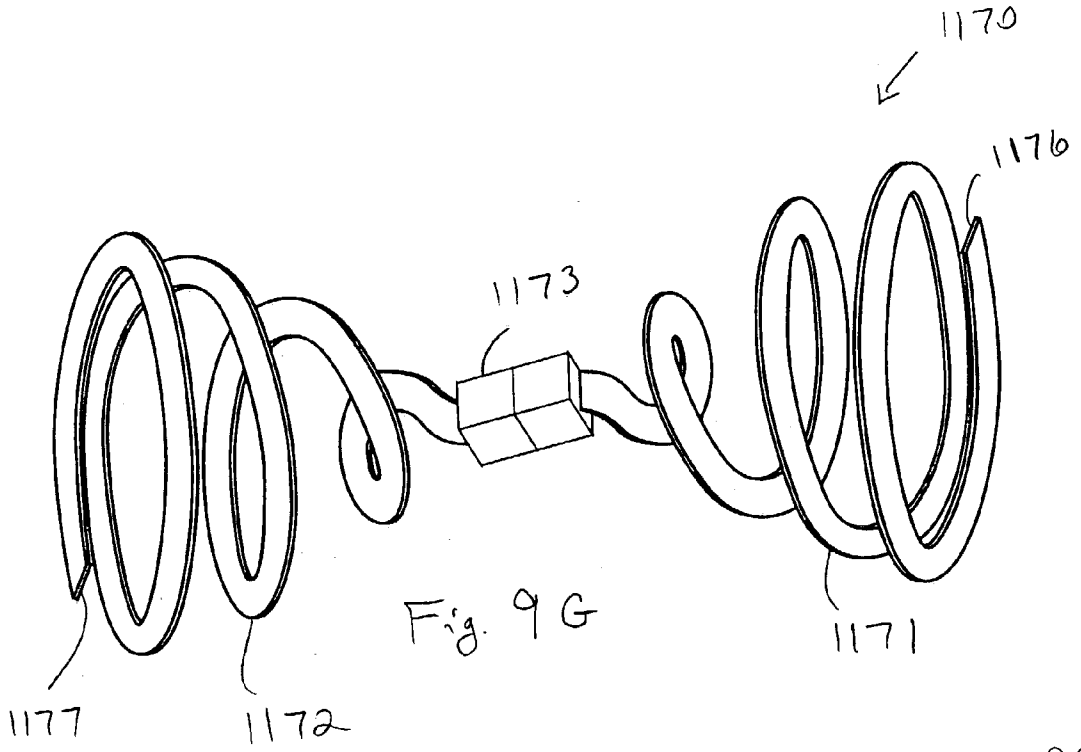

Fig. 9G

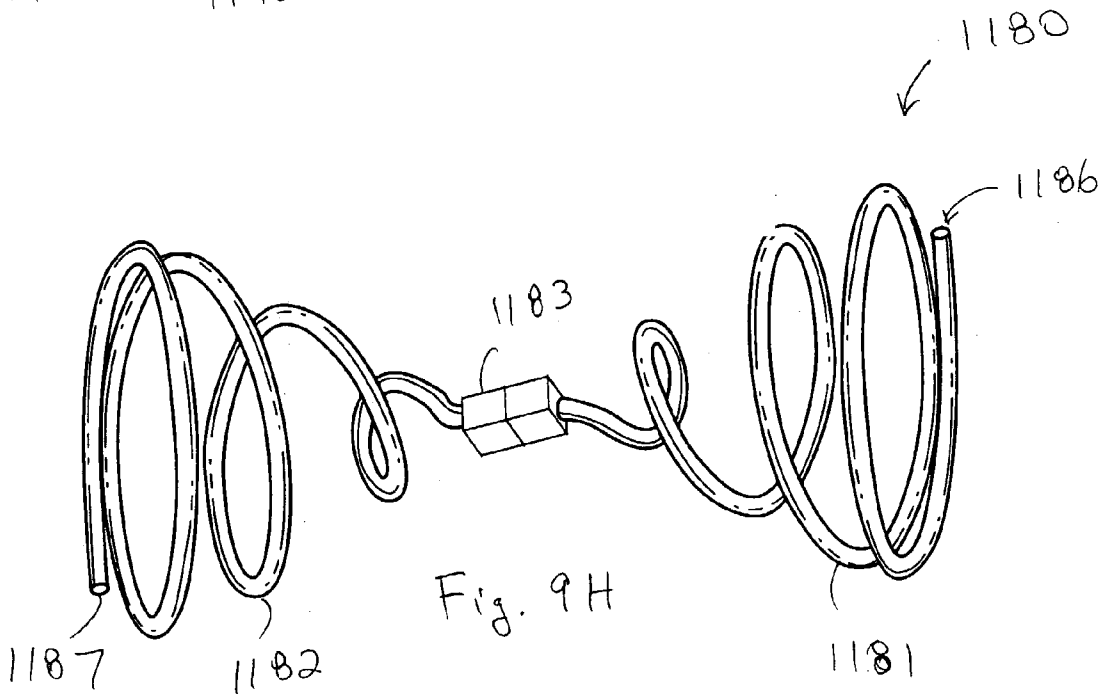

Fig. 9H

Fig. 10A



Fig. 10B

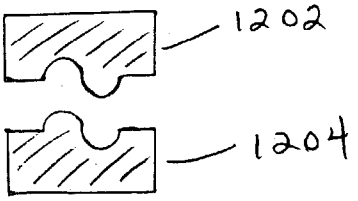

Fig. 10C

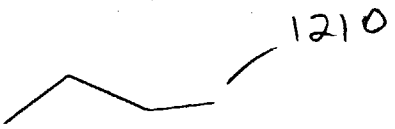

Fig. 10D

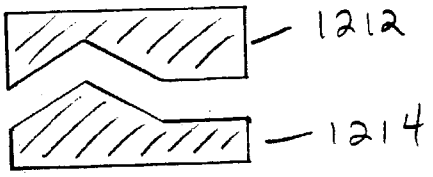

Fig. 11A

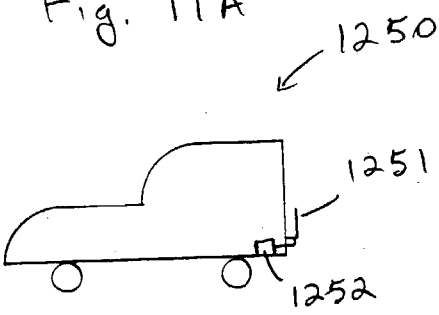

Fig. 11B

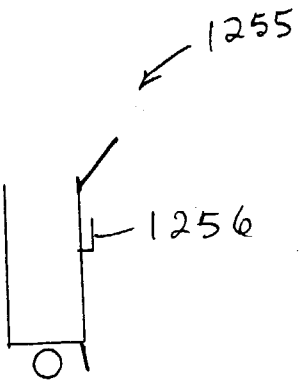

Fig. 12

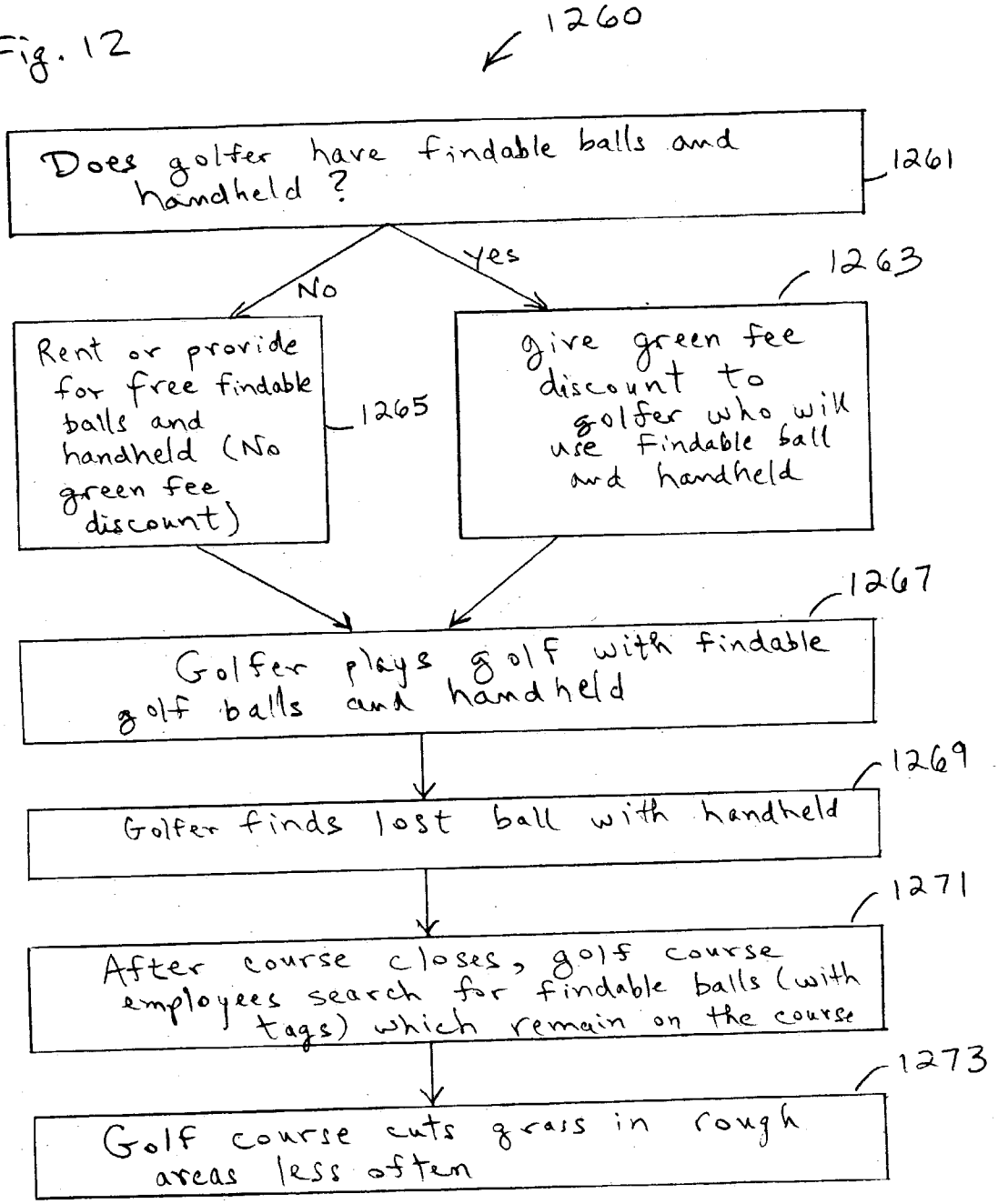
1260
Does golfer have findable balls and handheld ?
1261
No
Yes
1263
Rent or provide for free findable balls and handheld (No green fee discount)
1265
give green fee discount to golfer who will use Findable ball and handheld
1267
Golfer plays golf with findable golf balls and handheld
1269
Golfer finds lost ball with handheld
1271
After course closes, golf course employees search for findable balls (with tags) which remain on the course
1273
Golf course cuts grass in rough areas less often

Fig. 13

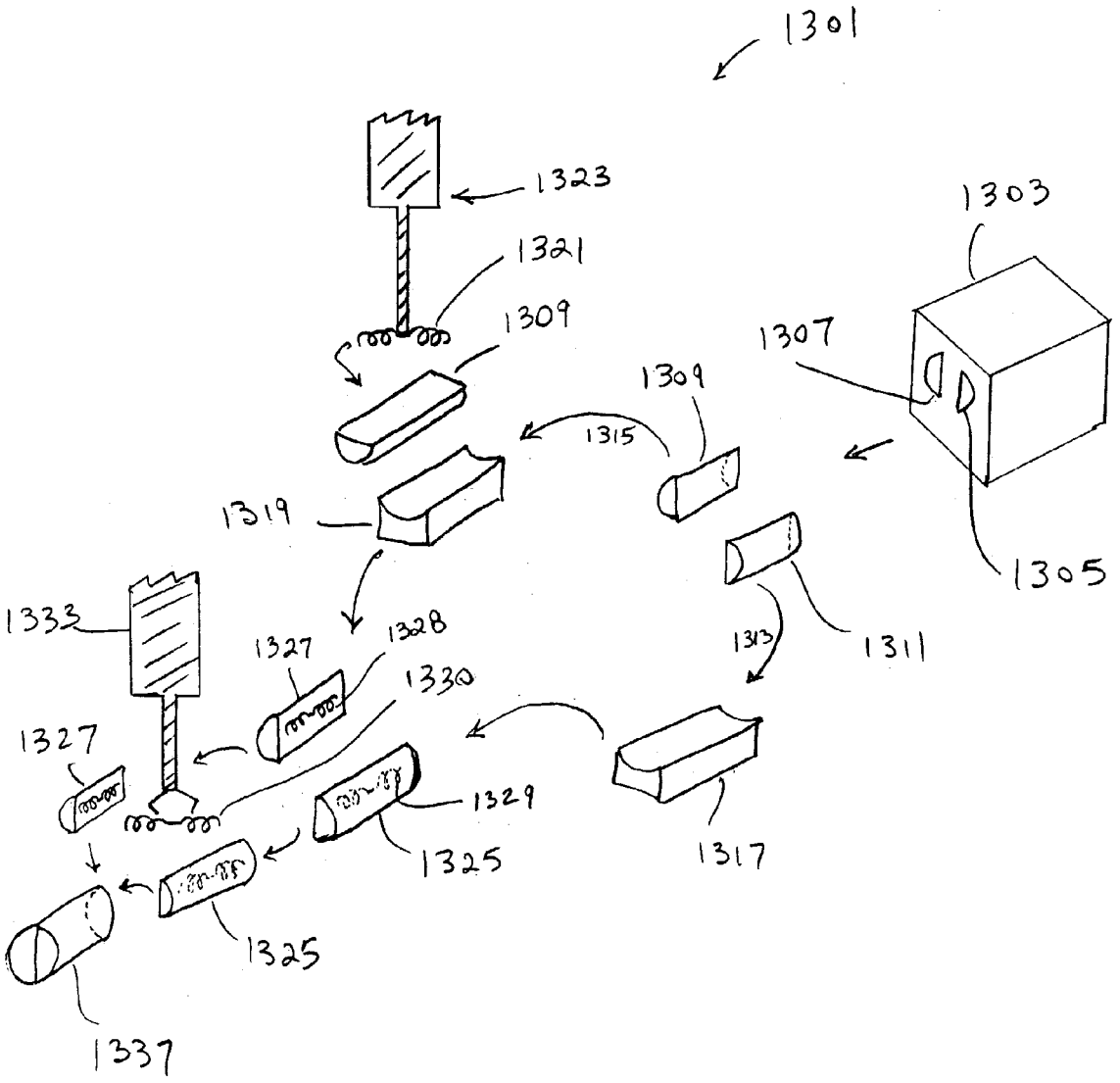
1301
1323
1321
1309
1303
1307
1309
1315
1319
1305
1333
1327
1328
1330
1313
1311
1327
1329
1325
1317
1325
1337

APPARATUSES, METHODS AND SYSTEMS RELATING TO FINDABLE GOLF BALLS

FIELD OF THE INVENTION

[0001] The inventions relate to sports, such as golf, and more particularly to golf balls, methods for making golf balls and systems for use with golf balls.

BACKGROUND OF THE INVENTION

[0002] Golf balls are often lost when people play golf. The loss of the ball slows down the game as players search for a lost ball, and lost balls make the game more expensive to play (because of the cost of new balls). Furthermore, according to the rules of the U.S. Golf Association, a player is penalized for strokes in a round or game of golf if his/her golf ball is lost.

[0003] There have been attempts in the past to make findable golf balls in order to avoid some of the problems caused by lost balls. One such attempt is described in German patent number G 87 09 503.3 (Helmut Mayer, 1988). In this German patent, a two piece golf ball is fitted with foil reflectors which are glued to the outer layer of the core. A shell surrounds the foil reflectors and the core. Each of the reflectors consist of a two part foil antenna with a diode connected on the inner ends. The diode causes a reflected signal to be double the frequency of a received signal. A 5 watt transmitter, which is used to beam a signal toward the reflectors, is used to find the ball. The ball is found when a reflected signal is generated by the foil antenna and diode and reflected back toward a receiver. The arrangement of the reflectors and diodes on the ball in this German patent causes the ball to have poor durability and also makes the ball difficult and expensive to manufacture. The impact of a club head hitting such a ball will rapidly cause the ball to rupture due to the interruption of the shell/core interface by the foil reflectors. Furthermore, the presence of the reflectors at this interface will negatively affect the driving distance of such a ball.

[0004] Another attempt in the art to make a findable golf ball is described in PCT patent application No. WO 0102060 A1 which describes a golf ball for use in a driving range. This golf ball includes an active Radio Frequency Identification Device (RFID) which identifies a particular ball. The RFID includes an active (e.g., contains transistors) ASIC chip which is energized from the received radio signal. The RFID device is mounted in a sealed capsule which is placed within the core of the ball. The RFID device is designed to be used only at short range (e.g., less than about 10 feet). The use of a sealed capsule to hold the RFID within the ball increases the expense of making this ball.

[0005] Other examples of attempts in the prior art to make findable golf balls include: U.S. Pat. Nos. 5,626,531; 5,423,549; 5,662,534; and 5,820,484.

SUMMARY OF THE DESCRIPTION

[0006] Apparatuses, methods and systems relating to findable golf balls are described herein.

[0007] In one exemplary embodiment of an aspect of the invention, a golf ball includes a shell, a core material which is encased in the shell, and a tag which is disposed in the core material and which has at least one perforation. The tag includes a diode which is coupled to an antenna. In one particular embodiment, the at least one perforation is a void or opening within the outer perimeter of the tag.

[0008] In one exemplary embodiment of another aspect of the invention, a golf ball includes a shell and a core material which is encased in the shell and a tag which is disposed within the core material and which is detectable with a handheld transmitting/receiving device over a range of at least about 20 feet (separating the tag and the handheld transmitting/receiving device). The golf ball has high durability (e.g., most such balls can normally survive at least 20 cannon hits using standard testing methodology used by the golf industry) and substantially complies with golf ball specifications of the U.S. Golf Association or the golf ball specifications of the Royal & Ancient Golf Club of St. Andrews.

[0009] A system, according to an exemplary embodiment of another aspect of the invention, includes a golf ball, having a tag which includes an antenna and a diode, and a handheld transmitting/receiving device which is capable of detecting the tag over a range of at least 20 feet and which complies with regulations of the Federal Communications Commission.

[0010] A method of making a golf ball, according to an exemplary embodiment of another aspect of the invention, includes forming a core precursor member having a first portion and a second portion; placing a tag between the first portion and the second portion, the tag having at least one perforation; placing the first and second portions, with the tag between the portions, into a mold structure; molding the portions, containing the tag, wherein the molding causes material from one of the first and second portions to extrude into the at least one perforation to contact the other of the first and second portions. A core member, formed either directly from the molding process or through processes after the molding, is then encased in a shell. The first and second portions may be created separately through a molding process which creates each portion individually, or they may be created through a molding process which creates a slug which is then sliced substantially in half to form both portions.

[0011] Also described herein are several embodiments of handheld transmitter/receivers which may be used to find golf balls containing at least one tag. These handheld transmitter/receivers are, in certain embodiments, designed to find golf balls at a range of at lease about 20 feet and are designed to substantially comply with governmental regulations regarding radio equipment such as Federal Communications Commission (FCC) regulations. For example, these certain embodiments are designed to transmit less than, or equal to, about 1 watt maximum peak power or about 4 watts effective isotropic radiated power.

[0012] Also described herein are several alternative embodiments of a tag which includes two diodes which are coupled in parallel between two antenna portions. This tag, in one embodiment, is placed within the core material of a golf ball. This double diode tag may be used as an alternative to the various tags shown herein by substituting the double diode arrangement for the single diode shown in the various tags herein.

[0013] Also described herein are several embodiments of tags which have antenna portions in more than one plane.

These tags may be considered to be three-dimensional tags, such as several different disclosed embodiments of spiral tags or tags which are initially a planar structure but are then bent or formed into a non-planar structure.

[0014] Also described herein are several embodiments of methods for operating a golf course, such as an 18-hole golf course. These methods include giving discounts to golfers who would play with their findable balls and handheld units. Other such methods include searching for lost, findable balls after a golf course has been closed, and cutting the grass in the rough areas less often (such that this grass grows higher than on golf courses which do not use findable balls).

[0015] Other embodiments of golf balls, handheld transmitter/receivers, ball and handheld systems, and methods of manufacturing balls and methods of using the balls are described. Other features and embodiments of various aspects of the invention will be apparent from this description.

BRIEF DESCRIPTION OF THE DRAWINGS

[0016] The present invention is illustrated by way of example and not limitation in the figures of the accompanying drawings in which like references indicate similar elements.

[0017] **FIG. 1A** shows a system for finding a golf ball according to one embodiment of the present invention.

[0018] **FIG. 1B** is a side view of an exemplary embodiment of a handheld transmitter/receiver which may be used with embodiments of the present invention.

[0019] **FIG. 1C** is a perspective view of a handheld transmitter/receiver of **FIG. 1B**.

[0020] **FIG. 2A** is an electrical schematic which illustrates an embodiment of a circuit for a tag according to one aspect of the invention.

[0021] **FIG. 2B** shows a structural representation of the circuit of **FIG. 2A**.

[0022] **FIGS. 2C and 2D** are electrical schematics which show other exemplary embodiments of a circuit for a tag according to one aspect of the invention.

[0023] **FIG. 3A** is a cross-sectional view of a golf ball which is one embodiment of the present invention.

[0024] **FIG. 3B** is a cross-sectional view of the same golf ball shown in **FIG. 3**A, except at a different cross-sectional slice of the golf ball.

[0025] **FIG. 3C** shows a magnified view of a portion of the golf ball shown in **FIG. 3B**.

[0026] **FIG. 3D** shows another cross-sectional view of the golf ball of **FIG. 3A**; this view shows various dimensions for one particular embodiment.

[0027] **FIG. 3E** shows a cross-sectional view, taken in a plane which is perpendicular to the plane of the tag shown in **FIG. 3A**.

[0028] **FIG. 4A** shows a cross-sectional view of another embodiment of a golf ball with a tag according to the present invention.

[0029] **FIG. 4B** shows the golf ball of **FIG. 4A** at a different cross-sectional view.

[0030] **FIG. 4C** shows a magnified view of a portion of the golf ball shown in **FIG. 4B**.

[0031] **FIG. 4D** shows the same cross-sectional view as **FIG. 4A** with specific measurements for a particular embodiment of a golf ball according to the present invention.

[0032] **FIG. 5A** shows a cross-sectional view of another embodiment of a golf ball of the invention.

[0033] **FIG. 5B** shows a cross-sectional view of another embodiment of a golf ball of the invention.

[0034] **FIG. 5C** shows a cross-sectional view of another embodiment of a golf ball of the invention.

[0035] **FIG. 5D** shows a cross-sectional view of another embodiment of a golf ball of the invention.

[0036] **FIG. 5E** shows a cross-sectional view of another embodiment of a golf ball of the invention.

[0037] **FIG. 5F** shows a cross-sectional view of another embodiment of a golf ball of the invention.

[0038] **FIG. 5G** shows a cross-sectional view of another embodiment of a golf ball of the invention.

[0039] **FIG. 5H** shows a cross-sectional view of another embodiment of a golf ball of the invention.

[0040] **FIG. 5I** shows a cross-sectional view of another embodiment of a golf ball of the invention.

[0041] **FIG. 5J** shows a cross-sectional view of another embodiment of a golf ball of the invention.

[0042] **FIG. 5K** shows a cross-sectional view of another embodiment of a golf ball of the invention.

[0043] **FIG. 5L** shows a cross-sectional view of another embodiment of a golf ball of the invention.

[0044] **FIG. 5M** shows a cross-sectional view of another embodiment of a golf ball of the invention.

[0045] **FIG. 5N** shows a plain view of a tag which may be used in a golf ball according to one embodiment of the invention.

[0046] **FIG. 5O** shows a plain view of another tag which may be used in a golf ball according to one embodiment of the invention.

[0047] **FIG. 5P** shows a plain view of another embodiment of a tag which may be used in a golf ball according to one embodiment of the present invention.

[0048] **FIGS. 6A, 6B**, 6C, and 6D show diagrammatically one embodiment of a method for making a golf ball of the present invention.

[0049] **FIG. 6E** shows another embodiment of a method of making a golf ball.

[0050] **FIG. 7** shows a flow chart of one exemplary process for making a golf ball of the present invention.

[0051] **FIG. 8A** shows a block diagram schematic of a handheld transmitter/receiver of one embodiment of the present invention.

[0052] **FIG. 8B** shows a block level schematic representation of an embodiment of a transmitter/receiver.

[0053] **FIG. 8C** shows a block level schematic of an embodiment of a handheld transmitter/receiver of the present invention.

[0054] **FIG. 8D** shows a block-level schematic of an embodiment of a handheld transmitter/receiver of the present invention.

[0055] **FIG. 9A** shows an exemplary embodiment of a tag having a spiral antenna.

[0056] **FIG. 9B** shows an exemplary embodiment of another tag having a spiral antenna.

[0057] **FIG. 9C** is an electrical schematic showing the circuit formed by a tag having a spiral antenna.

[0058] **FIGS. 9D, 9E** and 9F show various examples of tags having spiral antennas which have been placed within a slug which is to be molded to form a golf ball core.

[0059] **FIG. 9G** shows another exemplary embodiment of a tag having a spiral antenna.

[0060] **FIG. 9H** shows another exemplary embodiment of a tag having a spiral antenna.

[0061] **FIG. 10A** shows an example in a top view of a three-dimensional tag having, in this case, a shape which resembles the letter "S."

[0062] **FIG. 10B** shows an embodiment of a slug which has been cut or formed in order to receive the tag of **FIG. 10A**. A view of **FIG. 10B** is a top view showing the two portions of the slug.

[0063] **FIG. 10C** shows another example of a three-dimensional tag. A view of **FIG. 10C** is a top view, which resembles a cross-sectional view.

[0064] **FIG. 10D** shows an example of a slug which is cut or formed to receive the tag of **FIG. 10C**. A view of **FIG. 10D** is a top view of the two portions of the slug.

[0065] **FIG. 11A** shows a motorized golf cart having a cradle and a recharging mechanism for a handheld unit.

[0066] **FIG. 11B** shows an example of a pull cart having a cradle for a handheld unit of the present invention.

[0067] **FIG. 12** shows an exemplary embodiment of one method of operating a golf course utilizing findable balls and handheld units of various embodiments of this invention.

[0068] **FIG. 13** shows another exemplary method of making a golf ball having a tag.

DETAILED DESCRIPTION

[0069] Various embodiments and aspects of the invention will be described with reference to details set below, and the accompanying drawings will illustrate the invention. The following description and drawings are illustrative of the invention and are not to be construed as limiting the invention. Numerous specific details such as sizes and weights and frequencies are described to provide a thorough understanding of various embodiments of the present invention. However, in certain instances, well-known or conventional details are not described in order to not unnecessarily obscure the present invention in detail.

[0070] **FIG. 1A** shows an example of the system which uses a handheld transmitter/receiver to find a findable golf ball. A person **18** such as a golfer, may carry a handheld transmitter/receiver which is designed to locate a findable golf ball **10** which includes a tag **12** embedded in the golf ball. The handheld transmitter/receiver **14** may operate as a radar system which emits an electromagnetic signal **16** which then can be reflected by the tag **12** back to the transmitter/receiver which can then receive the reflected signal in a receiver in the handheld unit **14**. Various different types of tags, such as tag **12**, are described further below for use in the golf ball **10**. These tags typically include an antenna and a diode coupled to the antenna. The diode serves to double the frequency of the reflective signal (or to provide another harmonic of the received signal), which makes it easier for the receiver to detect and find a golf ball as opposed to another object which has reflected the emitted signal without modifying the frequency of the emitted signal. The tag within the golf ball **10** is typically positioned near the center of the ball and it is positioned such that the symmetry of the ball is maintained. For example, the center of gravity (and symmetry) of a ball with a tag is substantially the same as a ball without a tag. The tag in certain embodiments is of such a weight and size so that the resulting ball containing the tag has the same weight and size as a ball which complies with the United States Golf Association specifications or the specifications of the Royal & Ancient Golf Club of St. Andrews ("R&A"). Furthermore, in certain embodiments, a ball with a tag has the same performance characteristics (e.g. initial velocity) as balls which were approved for use by the United States Golf Association or the R&A. In certain embodiments, the tag may include a perforation or void or hole, often within the outer perimeter of the tag's antenna. This perforation or void or hole increases the durability of the ball, typically by allowing the two portions to mate through the perforation and/or by allowing the core rubber composition to flow through the perforation to give greater strength within the ball. Thus, the durability of the ball is significantly improved.

[0071] The handheld unit **14** shown in **FIG. 1A** may have the form shown in **FIGS. 1B and 1C**. This form, shown in **FIGS. 1B and 1C**, is one example of many possible forms for a handheld unit. This handheld device is typically a small device having a cylindrical handle which may be 4-5 inches long, and may have a diameter of approximately 1.5 inches. The cylindrical handle, such as handle **21**, is attached to a six-sided solid which includes an antenna, such as the antenna casing **22** shown in **FIGS. 1B and 1C**. **FIG. 1B** is a side view of a handheld transmitter/receiver which may be used in certain embodiments of the present invention. **FIG. 1C** is a perspective view of a handheld unit shown in **FIG. 1B**. The handheld unit is preferably compliant with all regulations of the Federal Communications Commission and is battery powered. The batteries may be housed in the handle **21**, and they may be conventional AA batteries which may be placed into the handle by a user or they may be rechargeable batteries which can be recharged either through the use of an AC wall/house socket or a portable rechargeable unit (e.g. in a golf cart). In order to comply with regulations of the Federal Communications Commission (FCC) or other applicable governmental regulations regarding radio equipment, the handheld may emit pulsed (or non-pulsed) radar with a power that is equal to or less than 1 watt. In certain embodiments, the handheld unit may emit

through its transmitter pulsed radar signals up to 1 watt maximum peak power and up to 4 watts effective isotropic radiated power (EIRP). Thus, the handheld unit for locating golf balls may be sold to and used by the general public in the United States. Several embodiments of handheld transmitters/receivers are described further below. At least some of these embodiments may be sold to and used by the general public in countries other than the United States because the embodiments meet regulatory requirements of those countries. For example, a handheld unit for use and sale in the European Union will normally be designed and manufactured to meet the CE marking requirements and the National Spectrum Authority requirements per the R&TTE (Radio and Telecommunications Terminal Equipment) Directive.

[0072] **FIG. 2A** shows an electrical schematic of a tag according to one embodiment. The circuit of the tag **50** includes an antenna having two portions **52** and **54**. The portion **52** is coupled to one end of the diode **56**, and the portion **54** is coupled to the other end of the diode **56**. A transmission line **58** which includes an inductor is coupled in parallel across the diode **56** as shown in **FIG. 2A**. The diode **56** is designed to double the received frequency so that the reflected signal from the tag is twice (or some harmonic) of the received signal. It will be appreciated that the double harmonic described herein is one particular embodiment, and alternative embodiments may use different harmonics or multiples of the received signal. **FIG. 2B** shows a structural representation of the circuit of **FIG. 2A**. In particular, **FIG. 2B** shows the antenna portions **52** and **54** coupled to their respective ends of the diode **56** which is in turn coupled in parallel to a transmission line **58**. In one embodiment of the circuit **70**, the diode **56** may be a diode from Metelics Corporation, part number SMND-840, which is available in a package referred to as an SOD323 package. The circuits shown in **FIGS. 2A and 2B** may be implemented in structures that have various different shapes and configurations as will be apparent from the following description.

[0073] **FIGS. 2C and 2D** show two exemplary embodiments of a tag which uses two diodes which are coupled in parallel between the two antenna portions. Any of the various tags (e.g. shown in FIGS. **3A-5P** or **9A-9H** or **10A** or **10C**) shown or described herein may use either of the circuits of **FIG. 2C** or 2D rather than the single diode implementation of **FIG. 2A**. In the one case of tag **72**, there is no inductor, and in the case of the tag **80**, there is an inductor which may be used to match the impedance of the diodes to the impedance of the antennas (antenna portions).

[0074] The tag **72** shown in **FIG. 2C** includes diodes **73** and **74** which are coupled together in parallel between antenna portions **75** and **76**. The two diodes are in a parallel connection but with reversed cathode-anode (N-P) orientation. This configuration will produce a stronger second harmonic response from the tag because of the resulting full wave implementation of the frequency doubling process. Thus, the tag (and hence the ball containing the tag) will be findable at a greater range. This double diode may be formed in a single integrated circuit at substantially the same cost as the single diode **56** shown in **FIG. 2A**. It will be appreciated that in such an integrated circuit, the P portion of the diode **73** is coupled to the N portion of the diode **74**, and the P portion of the diode **74** is coupled the N portion of the diode **73**.

[0075] The tag **80** shown in **FIG. 2D** is similar to the tag **72** except that an inductor **87** is included in this tag's circuit. The inductor **87** is coupled in parallel with the two diodes **83** and **84**, which are coupled in reverse cathode-anode orientation as in the case shown in **FIG. 2C**. The two diodes and the inductor are coupled in series between the antenna portions **85** and **86** as shown in **FIG. 2D**. The inductor **87** is an optional feature which may be used to match the impedance of the diodes to the impedance of the antenna portions **85** and **86**.

[0076] **FIG. 3A** shows a cross-sectional view taken through the center of a golf ball of one embodiment of the invention. The cross-sectional view is in the plane of the tag which in this embodiment is a planar structure formed primarily by two antenna portions **106**A and **106**B. An end view of the tag in **FIG. 3B** clearly shows the substantially planar structure of the tag. The cross-section of **FIG. 3B** is taken along the line **3**B-**3**B as shown **FIG. 3A**. **FIG. 3C** shows a magnified view of a portion of the tag within the bubble **120** shown in **FIG. 3D**. It will be appreciated that the bubble **120** is not a structural feature of the tag or the ball **100**, but rather, is merely shown for purposes of illustration so that the portion being magnified can be easily recognized. **FIG. 3D** shows the same view of a golf ball **100** as **FIG. 3A** except that **FIG. 3D** includes various exemplary dimensions for the tag and ball shown in **FIG. 3D**.

[0077] The golf ball **100** shown in **FIG. 3A** includes a shell **102** and a core which is formed from core material **104**. The shell **102** is sometimes referred to as an outer cover shell. The tag includes an antenna **106**, having antenna portions **106**A and **106**B, and a diode **110**, and a transmission line **112**. The outer perimeter **103** of the tag substantially conforms with the outer diameter of the core formed from the core material **104**. The antenna **106** which includes antenna portions **106**A and **106**B is electrically coupled to the diode **110** through a conductive adhesive **114**A and **114**B (shown in **FIG. 3C**). In one embodiment the conductive adhesive is solder. In an alternative embodiment, the conductive adhesive is a resilient conductive epoxy which includes metallic powder which is conductive and which is mixed with the epoxy. Examples of such resilient conductive adhesives include conductive adhesives from Tecknit (see www.tecknit.com) and an adhesive such as adhesive **2111** from Bondline Electronic Adhesives, Inc. The use of a compressible, and resilient conductive adhesive will improve the chances of the connection between the diode and the antenna surviving many shocks due to the golf club head hitting the golf ball. The transmission line **110** is coupled between the two antenna portions **106**A and **106**B as shown in **FIG. 3A**. Referring back to **FIG. 2**B, the transmission line **112** corresponds to the transmission line **58** of **FIG. 2**B, and the antenna portion **106**A corresponds to the antenna portion **52**, and the antenna portion **106**B corresponds to the antenna portion **54**, while the diode **56** of **FIG. 2B** corresponds to the diode **110** of **FIG. 3A**. The tag in the ball **100** of **FIG. 3A** includes several perforations or openings which exist from one side of the tag through and to the other side of the tag. These perforations include the void or perforation **108** which is within the central portion of the tag, and the perforations **109**A and **109**B and **109**C which are on the antenna portions **106**A and **106**B as shown in **FIG. 3A**. Other perforations, not labeled with numerals are also shown on the antenna portions **106**A and **106**B. These perforations may be regularly spaced or irregularly spaced

on the antenna portions. All the perforations shown in **FIG. 3A** are within the outer perimeter **103** of the tag. These perforations allow the core material **104** to extrude through the perforations during the manufacturing process such that a unitary core material is formed through the perforations, thereby providing for greater durability of the golf ball. This can be seen from **FIG. 3E** which shows a cross-sectional view of the ball **100** taken around the region of the perforation **109**A, where the cross-sectional view is perpendicular to the plane of the antenna portion **106**A. As shown in **FIG. 3**E, the antenna portion **106**A includes perforation **109**A. As a result of the molding process described below, the core material **104** is extruded through the perforation **109**A forming a unitary structure on both sides of the perforation and through the perforation as shown in **FIG. 3E**. A similar effect occurs at all of the other perforations, such as the perforation **108** which is centrally located within the outer perimeter **103** of the tag.

[**0078**] **FIG. 3D** shows various exemplary dimensions for a tag and ball, such as the golf ball **100**. The exterior or outside ball diameter is about 1.68 inches. The inside diameter of the shell **102**, which coincides with the outside diameter of the core is about 1.5 inches. The approximate diameter of the outer perimeter **103** of the tag is about 1.36 inches. The approximate diameter of the centrally located perforation **108** is approximately 0.76 inches. The approximate diameter of each of the eight perforations on the antenna portions **106**A and **106**B is approximately 0.125 inches in diameter. These eight perforations in the two antenna portions **106**A and **106**B are located substantially on a circle which has a diameter of 1.06 inches. The angular separation between these eight perforations is approximately 33°, while the angular separation between the end perforations and the centerline **100**A is about $_{40}$°. The distance from the centerline **100**B, which horizontally intersects the center of the ball **100**, to the top of the antenna shown in **FIG. 3**D, is about 0.533 inches. Thus, the typical top to bottom length of the antenna **106** in the view shown in **FIG. 3D** is about 1.066 inches. The following dimensions are with respect to the "U" shaped transmission line **112** which is centrally located within the perforation **108** as shown in **FIGS. 3A and 3D**. This "U" shaped transmission line is formed from the same copper material as the antenna portions **106**A and **106**B. Typically, the antenna **106** and the transmission line **112** are formed from a unitary piece of copper which is etched to have the shape shown in **FIGS. 3A and 3D**, and then the diode **110** is attached through a conductive adhesive as shown in **FIG. 3C**. The width of the transmission line **112** is about 0.06 inches. Including this width, the "U" shaped transmission line **112** extends from the centerline **100**B up towards the top of the ball shown in **FIG. 3D** by approximately 0.136 inches. There is a perforation or void between the inside edges of the "U" shaped transmission line. The size of this void from one side of the inside edge of the "U" shaped transmission line to the other side of the inside edge of the transmission line is approximately 0.06 inches. The gap from the centerline **100**A to an inside edge of the "U" shaped transmission line is about 0.03 inches.

[**0079**] It is often desirable to mount an antenna in a tag, such as antenna **106**, on an insulating substrate. In the embodiment shown in **FIGS. 3A through 3E**, the tag is mounted on a dielectric (insulating) substrate, which in this case is a layer of an insulator known as Kapton, which is approximately 0.005 inches thick. The Kapton layers **118** and **119** shown in **FIG. 3C** leave open the void created by the "U" shaped transmission line. In effect, in the embodiment shown in **FIGS. 3A through 3E**, where there is no copper (e.g., antenna), there is no Kapton such that the Kapton does not exist in the perforation **108**, and does not exist in the perforations in the antenna portions, such as perforations **109**A, **109**B, and **109**C. In this manner, the perforations exist from one side of the tag to the other side of the tag thereby allowing the core material **104** to extrude through the perforations to form a unitary structure of core material from one side of the tag through and to the other side of the tag. It will be appreciated that the Kapton may be allowed to exist in certain places where there is no copper (antenna), such as in the void of the copper of the "U" shaped transmission line. In this case, there is no perforation in the Kapton and no perforation in the tag which allows for the extrusion of core material through the perforation in the molding process.

[**0080**] The ball **100** shown in **FIGS. 3A, 3B** and **3**D may be constructed in a manner such that complies with the specifications for a golf ball of the U.S. Golf Association or the R&A. For example, the weight of the golf ball without the tag will be approximately 45.50 grams but not exceeding 45.927 grams (total ball and tag weight), and the weight of the tag (all components) may be about 0.359 grams, which results from the combination of the weight of the Kapton dielectric, the copper antenna, the diode, and the conductive adhesive, each of which respectively are 0.157 grams, 0.182 grams, 0.004 grams, and 0.0156 grams. The size and shape of the golf ball as shown in **FIG. 3A** is within the specifications for a golf ball of the U.S.G.A. (United States Golf Association) or the R&A and thus, the weight and size of such a golf ball complies with the specifications of the U.S.G.A. or the R&A. Furthermore, it has been determined that a golf ball with a tag such as that shown in **FIG. 3A** has sufficiently high durability to comply with the durability characteristics of golf balls normally approved by the U.S.G.A. or the R&A for tournament play. For example, a golf ball of the form shown in **FIG. 3A** will normally survive many cannon hits, which is the conventional way of testing the durability of golf balls. Most golf balls designed according to the embodiment of **FIG. 3A** survive at least 20 cannon hits and many such golf balls survive nearly 40 cannon hits, which is considered to be a desired goal for durability of golf balls. Furthermore, it has been found that the flight characteristics (e.g. initial velocity) of a golf ball such as golf ball **100** shown in **FIG. 3**A, substantially complies with the flight characteristics of golf balls specified by the U.S. Golf Association or the R&A. Thus, the overall distance the ball travels with normal hits, and its initial velocity and other parameters normally specified in the requirements of the U.S.G.A. or the R&A under their standard testing procedure, are satisfied by the golf ball fabricated as described in the embodiment shown in **FIG. 3A**.

[**0081**] **FIGS. 4A, 4B**, 4C, and 4D show an alternative embodiment of a golf ball according to the present invention. The golf ball **130** shown in **FIGS. 4A, 4B**, 4C, and 4D is very similar to the golf ball **100** shown in **FIGS. 3A, 3B**, 3C, 3D, and 3E. The golf ball **130** has substantially the same specifications as the golf ball **100**, as shown by the measurements of **FIG. 4**D and the measurements of **FIG. 3D**. Moreover, the tag of the golf ball **30** includes a diode **110** and an antenna **132** which is similarly shaped to the antenna

106 of **FIG. 3A**. Moreover, a transmission line **134** is similarly shaped to transmission line **112** of **FIG. 3A**. Furthermore, a shell **102** having an outside diameter of about 1.68 inches surrounds the core material **104** which has an outside diameter (corresponding to the inside diameter of the shell **102**) of about 1.5 inches. A tag having an antenna **132** formed by antenna portions **132**A and **132**B, is coupled to the diode **110** and to the transmission line **134**. A perforation **136** is located within the outer perimeter of the antenna **132** and serves a similar purpose as the perforation **108** of **FIG. 3A**. However, the antenna portions **132**A and **132**B do not include perforations (unlike the antenna portions **106**A and **106**B of **FIG. 3A** which do include perforations, such as perforations **109**A and **109**B). This can be seen in the view of **FIG. 4A** which is a cross-sectional view of the plane of the tag; this view shows that there are no perforations in the antenna portions **132**A and **132**B, unlike the perforations in the antenna portions **106**A and **106**B of **FIG. 3A**. The view shown in **FIG. 4B** is similar to the view shown in **FIG. 3B**. This view may be considered to be an end view which is parallel with the plane of the tag and which shows how a diametric axis which passes through the center of the golf ball is substantially aligned with a diametric axis of the tag formed primarily by the antenna **132**. The bubble **142** is shown for illustrative purposes in **FIGS. 4B and 4C**, and is understood to be not required to be a part of the physical structure of the golf ball, but is used rather for purposes of illustration. **FIG. 4C** shows a magnified view of a portion within the bubble **142**. This magnified view shows that the diode **110** is coupled by a conductive adhesive **138**A and **138**B to their respective antenna portions **132**A and **132**B. The conductive adhesive **138**A and **138**B may be similar to the conductive adhesive **114**A described above. The antenna portions **132**A and **132**B may be a copper conductor which has a thickness of approximately 0.0014 inches thick. A substrate which is an insulator, such as Kapton, may be applied below the copper antenna. The Kapton does not exist in the perforation area **136**, and thus this perforation area allows for the two portions of a core precursor which is placed within a mold to bind through the perforation **136** to perform a unitary structure, such as the structure shown in **FIG. 3**E, wherein the structure extends through the perforation as shown in **FIG. 3E**. The perforation **136** is contained within the outer perimeter **133** which substantially conforms with the outer diameter of the core member as shown in **FIG. 4D**.

[**0082**] **FIGS. 5A through 5P** show various golf ball components which include tags having various shapes and configurations which are alternative embodiments of the present invention. At least some of these embodiments share certain characteristics which will now be described before describing each of these particular embodiments in **FIGS. 5A through 5P**. In certain of the embodiments, the tag structure is substantially planar and symmetrical about a diametric axis which passes through the center of a golf ball. The tag structure is substantially in one plane which intersects (substantially) the center of the golf ball and has an outer perimeter which conforms to the inner contour (diameter) of the shell, which itself conforms to the outer diameter of the core in the case of the two-piece golf ball. The diode in certain embodiments is typically coupled to the antenna along the diametric axis. There is an internal void or perforation around a transmission line within certain embodiments of the tag. As can be seen from the various embodiments, the diode will be positioned either substantially at the center of the golf ball or substantially off-center. The diode in some embodiments is substantially near the center of the ball (e.g. **FIGS. 5C and 5E**) and in other embodiments it is not (e.g. **FIGS. 3A and 4A**). At least two types of transmission lines are shown having two distinct shapes; one case involves a "U" shaped portion which is bisected by the diametric axis of the golf ball, and another type of transmission line includes the "T" shaped transmission line which is also bisected by the diametric axis of the golf ball. Due to the perforations which exist in the tag, the surface area of the plane of the tag is less than the surface area of a cross-section through the center of the ball. Many of the embodiments described herein include an antenna which has a first wing and a second wing which is bisected by the diametric axis through the center of the golf ball. The first wing and the second wing are symmetrical and have at least one perforation which separates the first and second wings. A transmission line which is coupled to the first and second wings is substantially bisected by the diametric axis. At least a portion of the outer perimeter of the first and second wings substantially conforms to the outer diameter of the core material of the golf ball.

[**0083**] Various alternative embodiments of tags which may be used in golf balls will now be described while referring to **FIGS. 5A through 5P**. The golf ball component **200** shown in **FIG. 5A** shows a tag within a core **204** which then can be encased in the shell to form a golf ball. The tag includes a diode **201** which is contained within the core material **206**. The tag is wholly contained within the outer perimeter of the core **204**. The tag includes, in addition to the diode **201**, a transmission line **210**, and an antenna having antenna portions **208** and **209**, which are coupled to the diode **201**, and which are coupled to the transmission line **210** as shown in **FIG. 5A**. A central perforation, which is within the outer perimeter **203** of the tag, is surrounded by the antenna portions **208** and **209**. Various exemplary dimensions are shown in **FIG. 5A**. While the tag of **FIG. 5A** has a transmission line of the same width as the transmission line of **FIG. 3**A, and while the diameter of the outer perimeter of the antenna of **FIG. 5A** is similar to the diameter of the outer perimeter of the antenna of **FIG. 3**A, the antenna is longer from top to bottom in **FIG. 5**A's embodiment than the embodiment of **FIG. 3A**.

[**0084**] **FIG. 5B** is another embodiment of a tag in a golf ball or golf ball core. The tag and core combination **220** includes an antenna having antenna portions **228** and **229** and a diode **221** which is coupled to the antenna portions **228** and **229**. A perforation **222** centrally located within the outer perimeter **223** of the tag is also part of the tag's structure. The outer perimeter **224** of the core material completely surrounds the outer perimeter **223** of the tag. It can be seen that the outer perimeter **223** substantially conforms to the outer perimeter **224** of the core material. The embodiment shown in **FIG. 5B** does not include a transmission line. The view shown in **FIG. 5B** is a cross-sectional view taken at a plane which intersects the center of the core, wherein the plane which shows the view is parallel with the plane of the antenna having antenna portions **228** and **229**. Thus, the position of the tag shown in **FIG. 5B** is similar to the position of the tag shown in **FIG. 3A**.

[**0085**] **FIG. 5C** shows another embodiment of a tag in a golf ball core. The core and tag combination **240** includes a

diode **241** and antenna portions **248** and **249** which are connected to the diode **241**. A perforation **242** extends along the diametric vertical axis as shown in **FIG. 5C**. This perforation is also within the outer perimeter **243** of the tag. There are also "V" shaped perforations between the spokes of the antenna portions **248** and **249**. **FIG. 5C** shows a cross-sectional view of the tag within the core, and thus the view of **FIG. 5C** is the same as the view shown in **FIG. 3A**.

[**0086**] **FIG. 5D** shows another embodiment of the tag and core combination **260** which includes a diode **261** which is coupled to the antenna portions **268** and **269**. These antenna portions surround the perforation **262**, which is similar to the perforation **108** shown in **FIG. 3A**. The perforation allows for the core material **266** to extend through the perforation during the molding process described below. The outer perimeter **264** of the core material completely surrounds the tag shown in **FIG. 5D**.

[**0087**] **FIG. 5E** shows another embodiment of a golf ball **280** which includes a tag. The golf ball shown in **FIG. 5E** is a two-piece ball having a shell **285** which surrounds the outer perimeter **284** of the core material **286**. The tag includes a diode **281** which is coupled between the two antenna portions **288** and **289**. A transmission line **290** is also coupled between the two antenna portions **288** and **289**. The tag includes at least one perforation **282** which is contained within the outer perimeter **283** of the tag. The view of **FIG. 5E** is a cross-sectional view wherein the plane of the view is parallel with the plane of the tag such that the view of **FIG. 5E** is similar to the view in **FIG. 3A**. The tag as shown in **FIG. 5E** is symmetrical about the centerline which coincides with a diametric axis of the golf ball which diametric axis intersects with the center of the golf ball. It can be seen from **FIG. 5E** that most of the outer perimeter **283** of the tag conforms substantially to the outer perimeter **284** of the core material **286**. The tag shown in **FIG. 5E** is substantially planar and symmetric about the diametric axis which intersects the center of the golf ball. The "T" shaped transmission line **290** is bisected by this diametric axis. It can also be seen from **FIG. 5E** that the surface area of the plane of the tag is less than the cross-sectional area of a plane through the center of the ball. The perforation **282** allows for the core material **286** to be extruded through the perforations as a result of the molding process to produce a result which is similar to that shown in **FIG. 3E**.

[**0088**] **FIG. 5F** shows another embodiment of a golf ball **300** which is a two-piece golf ball including a shell **305** which surrounds the outer perimeter **304** of the core material **306**. A tag is contained within the core material **306**, and this tag includes a diode **301** which is coupled between antenna portions **308** and **309**. The antenna portions **308** and **309** are coupled to a transmission line **310**. The view of **FIG. 5F** is similar to the view shown in **FIG. 3A**, and is a cross-sectional view taken through the center of the golf ball. A perforation **302** exists between the two antenna portions and within the outer perimeter **303**. Additionally, there are "V" shaped perforations between the spokes of the antenna portions. The dimensions shown in **FIG. 5F**, as well as all the other figures are in inches (except for of course the angular dimensions which are in degrees).

[**0089**] **FIG. 5G** shows another embodiment of a tag in a golf ball according to the present invention. The golf ball **320** is a two-piece golf ball which includes a shell **325** which surrounds the outer perimeter **324** of the core material **326**. This golf ball may be formed in accordance with the method described below and shown in **FIG. 7** and **FIGS. 6A through 6D**. The tag includes a diode **321** which is coupled between antenna portions **328** and **329**. These antenna portions are coupled to a transmission line **330**, and these antenna portions surround a perforation **322** which is similar to the perforation **136** shown in **FIG. 4A** and the perforation **108** shown in **FIG. 3A**. The perforation **322** is within the outer perimeter **323** of the tag. The view of **FIG. 5G** is a cross-sectional view taken through the center of the golf ball **320**, and thus it is similar to cross-sectional view of **FIG. 3A**. The tag of **FIG. 5G** is substantially a planar tag which is symmetrical about the diametric axis which intersects the center of the golf ball **320**. The outer perimeter **323** of the tag substantially conforms to the inner surface of the shell **325** and conforms to the outer surface of the core material **326**. The "T" shaped transmission line **330** is bisected by the diametric axis, and the diode **321** is located near the center of the golf ball. As can be seen from **FIG. 5G**, the antenna portions **328** and **329** resemble first and second wings which are bisected by the diametric axis and which are symmetrical about this diametric axis. The perforation **322** separates the first and second wings. As in the case of the example shown in **FIG. 3A**, the perforation **322** allows for the core material **326** to be extruded through the perforation during the molding process described below to yield a result which is similar to that shown in **FIG. 3E**.

[**0090**] Another exemplary embodiment of a golf ball according to the present invention is shown in **FIG. 5H**, which is a cross-sectional view taken through the center of the golf ball **340** shown in **FIG. 5H**. The golf ball **340** is a two-piece golf ball which includes a shell **345** which surrounds the outer perimeter **344** of the core material **346**. This golf ball **340** may be fabricated according to the process described below relative to **FIGS. 6A through 6D** and **FIG. 7**. The golf ball **340** includes a tag having a diode **341** which is coupled between antenna portions **348** and **349**. A transmission line **350** is coupled between antenna portions **348** and **349**. The perforation **342** is contained within the outer perimeter **343** of the tag, and additional perforations which are "V" shaped exist between the spokes of the antenna portions **348** and **349**. The various linear dimensions shown in **FIG. 5H** indicate the sizes of the various components shown in **FIG. 5H** and are in inches. It can be seen that the tag structure of **FIG. 5H** is symmetrical about the diametric axis which intersects the center of the golf ball. The diode **341** is substantially near the center of the golf ball **340**, and the tag structure is substantially planar. The ends of the spokes of the antenna portions form an outer perimeter **343** which substantially conforms to the outer surface **344** of the core material **346**. The "T" shaped transmission line **350** is substantially bisected by the diametric axis which intersects the center of the golf ball **340**.

[**0091**] Another exemplary embodiment of a golf ball according to the present invention is shown in **FIG. 5I**. **FIG. 5I** is a cross-sectional view where the plane of the cross-section is taken through the center of a golf ball **360**. The golf ball **360** is a two-piece golf ball having a shell **365** which surrounds the outer surface or perimeter **364** of the core material **366**. Contained within the core material **366** is a tag which includes a diode **361** which is coupled between antenna portions **368** and **369**. An elongated transmission line **370** is coupled between the antenna portions **368** and

369. A perforation **362** exists between the antenna portions **368** and **369**, an there are additional perforations which are "V" shaped between the spokes of the antenna portions. The perforations are within the boundary established by the outer perimeter **363** which is formed effectively by the ends of the spokes of the antenna portions.

[**0092**] Another exemplary embodiment of a golf ball according to the present invention is shown in **FIG. 5J**, which is a cross-sectional view, where the plane of the cross-section is taken through the center of the golf ball **380**. The golf ball **380** is a two-piece ball having a shell **385** which surrounds an outer perimeter **384** of the core material **386**. Wholly contained within the core material **386** is a tag which has antenna portions **388** and **389**. The tag also includes a diode **381** which is coupled between the antenna portions **388** and **389**, and further includes a transmission line **370** which is also coupled between the antenna portions **388** and **389**. The perforation **382** exists between the two antenna portions **388** and **389**, and this perforation is within the outer perimeter **383** of the tag as shown in **FIG. 5J**. This outer perimeter **383** substantially conforms to the outer perimeter **384** of the core material **386**. The golf ball **380** may be fabricated according to the method described below relative to **FIGS. 6A through 6D** and **FIG. 7**.

[**0093**] **FIG. 5K** shows another exemplary embodiment of a golf ball according to the present invention. The golf ball **400** shown in **FIG. 5K** is a two-piece golf ball which includes a shell **405** which surrounds the outer perimeter **404** of the core material **406**. Wholly contained within the core material **406** is a tag which includes an antenna portion **408** and an antenna portion **409**. The tag also includes a diode **401** which is coupled between the two antenna portions **408** and **409**. A transmission line **410** is also coupled between the two antenna portions **408** and **409**. A perforation **402** exists between the two antenna portions **408** and **409** and is contained within the outer perimeter **403** of the tag. The golf ball **400** will be fabricated according to one of the methods described below such that the core material **406** is extruded through the perforation **402** to produce a result which is similar to that shown in **FIG. 3E**. It can be seen from **FIG. 5K** that the tag is substantially symmetrical about a diametric axis which intersects the center of the golf ball **400**. The tag is substantially planar and includes a "T" shaped transmission line which is also bisected by the diametric axis. In this embodiment, the diode **401** is located substantially at the center of the golf ball **400**.

[**0094**] **FIG. 5L** shows another exemplary embodiment of a golf ball of the present invention. The golf ball **420** shown in **FIG. 5L** is a two-part golf ball including a shell **425** which surrounds an outer perimeter **424** of a core material **426**. The core material **426** wholly contains a tag which includes a diode **421** and two antenna portions **248** and **249** and the transmission line **430**. The diode **421** is coupled between the two antenna portions **428** and **429**, and the transmission line **430** is coupled between the two antenna portions **428** and **429**. The perforation **422** between the antenna portions separate the antenna portions and is similar to the perforation **108** of **FIG. 3A**. In addition, the transmission line **430** includes a perforation. These perforations are within the outer perimeter **423** defined by the ends of the antenna portions. The golf ball **420** may be fabricated according to one of the embodiments described below for a method of fabricating a golf ball. Thus, the extrusion of the core material **426** through the perforations will result in a structure which is similar to that shown in **FIG. 3E**. The tag of **FIG. 5L** is a substantially planar tag which is symmetrical about the diametric axis of the golf ball, which diametric axis intersects the center of the golf ball **420**. The T-shaped transmission line **430** is bisected by the diametric axis, and the tag structure is symmetrical about this diametric axis which coincides with the vertical center line shown in **FIG. 5L**. **FIG. 5L** is a cross-sectional view where the plane of the cross-section is taken through the center of the golf ball **420** and thus it resembles the view shown in **FIG. 3A**.

[**0095**] **FIG. 5M** shows another exemplary embodiment of a golf ball according to the present invention. The golf ball **440** is a two-piece golf ball which includes a shell **445** which surrounds an outer perimeter **444** of the core material **446**. In the cross-sectional view of **FIG. 5M**, it can be seen that the tag includes a diode **441** and antenna portions **448** and **449** as well as a transmission line **450**. The diode **441** is coupled between the two antenna portions **448** and **449**, and the transmission line **450** is coupled between these two antenna portions. At least one perforation **442** exists within the outer perimeter **443** of the tag, where the outer perimeter **443** is defined by the outer edge or perimeter of the antenna portions. The cross-sectional view of **FIG. 5M** is in a plane which intersects the center of the golf ball, and the tag structure is substantially planar and symmetrical about a diametric axis of the golf ball which intersects the center of the golf ball. The golf ball **440** shown in **FIG. 5M** may be fabricated according to the methods described below such that the core material **446** is extruded through the perforations **442** during the molding process to yield a structure which is similar to that shown in **FIG. 3E**.

[**0096**] **FIG. 5N** shows an exemplary embodiment of a tag of the present invention. The tag **460** includes antenna portions **468** and **469** and a diode **461** which is coupled between these antenna portions. A transmission line **470** is coupled to the antenna portions **468** and **469**, and this transmission line **470** surrounds the perforation **462**, which perforation separates the transmission line from the antenna portions **468** and **469**. There is also a separation between the antenna portions which may also be a perforation. The tag of **FIG. 5N** may be made small enough in its rectangular shape so that it fits completely within the core material of a two-piece golf ball. Alternatively, portions of the antenna portions **468** and **469** may be trimmed away to allow this tag to fit within a golf ball core or within a one-piece golf ball. The tag shown in **FIG. 5N** is a substantially planar tag which may be placed in a plane in the golf ball core which intersects with the center of the golf ball. In this position, the substantially planar tag of **FIG. 5N** will be symmetrical about the diametric axis of the golf ball, which diametric axis intersects the center of the golf ball. The tag of **FIG. 5N** may be introduced into a core material to fabricate a golf ball according to one of the methods described below relative to FIGS. 6A-6D and **FIG. 7**.

[**0097**] **FIG. 5O** shows another exemplary embodiment of a tag which may be used in golf balls of the present invention. Tag **480** is similar to the tag **460** except it includes additional perforations in the antenna portions **488** and **489**. The tag **480** includes a diode **481** which is coupled between the antenna portions **488** and **489** and includes a transmission line **490** which is coupled between the antenna portions, in which, together with the antenna portions, defines the

perforation **482**. In addition to the perforation **482**, nine circular perforations on each of the antenna portions provide additional openings for the core material to be extruded through the perforations, such as perforations **482**A, **482**B, **482**C, and **482**D.

[**0098**] **FIG. 5P** shows another exemplary embodiment of a tag which may be used in golf balls of the present invention. The tag **500** is a substantially circular tag which is also substantially planar. The tag includes a diode **501** coupled between antenna portions **508** and **509**. The outer perimeter **503** of the tag **500** is substantially circular and includes a perforation **502** within the outer perimeter **503**. A transmission line **510** is coupled between the antenna portions **508** and **509**. In addition to the perforation **502**, perforations of different sizes are included on the antenna portions **508** and **509**. In particular, smaller perforations **502**C and **502** are on the antenna portion **508**, while larger perforations such as perforations **502**A and **502**B are on the antenna portion **509**. The tag **500** may be included in a golf ball core and fabricated according to the techniques described below. The perforations in this tag will allow for the core material to be extruded through the perforations to create a structure similar to that shown in **FIG. 3E**.

[**0099**] **FIGS. 6A through 6D** and **FIG. 7** will now be referred to while describing various embodiments of methods of fabricating golf balls of the present invention. The following discussion assumes a two-piece ball having a core material which is surrounded by a relatively thin shell, such as the golf ball shown in **FIG. 3A**. It will be appreciated, however, that the following discussion will also apply to one-piece golf balls and to golf balls having more than two pieces. The one exemplary method shown in FIGS. **6A-6D** begins with a cylindrical-shaped slug **600** which, in one embodiment, is about 1.375 inches high and has a diameter of 1.125 inches. The cylindrical-shaped slug is typically a rubber composition which has not been vulcanized. Examples of such compositions are described in U.S. Pat. Nos. 5,508,350 and 4,955,613. In the example shown in **FIGS. 6A and 6B**, the slug **600** is sliced in half to create slug portions **602** and **604**. In certain embodiments, the material of the slug **600** is an unvulcanized rubber which is extruded to form the shape of the slug **600**. It will be appreciated that this is one method of forming the two portions as shown in operation **702** of **FIG. 7**. In an alternative embodiment, these two portions may be formed separately as two separately extruded pieces or in some other manner to create the two separate portions separately rather than from a single slug such as slug **600**. These two portions may be considered golf ball precursor portions. After the two portions are created, such as portions **602** and **604**, a tag such as tag **606** is placed between the two portions. The tag **606** typically will include antenna portions **609** and **610** between which are coupled a diode **608**. The tag **606** may also include a transmission line **610**A which is disposed in the central perforation **607**. The tag **606** may be similar to the tag shown in **FIG. 4A**. Once the tag **606** is placed between the two portions **602** and **604**, these portions are brought together to create the combined structure **620** as shown in **FIG. 6C**. The combined structure **620** includes the seam **615** which separates the two portions **602** and **604**. The tag **606** is sandwiched between the two portions, preferably in the middle of these two portions, so that the tag will end up being substantially centered in the final core. The seam **615** may not be sealed or glued together; that is, the two portions **602** and **604** may not be held together by glue in the configuration shown in **FIG. 6C**. Typically, the extruded, unvulcanized rubber (which may be used in certain embodiments) of the two portions has enough tackiness to hold together the tag and two portions **602** and **604**. After the structure shown in **FIG. 6C** is obtained, the combined structure **620** is placed in a mold **622** as shown in **FIG. 6**D and as described in operation **706** of **FIG. 7**. The mold is of a proper size to form a resulting core size of about 1.5 inches in diameter. The core will typically weigh in the range of about 34.75 to 35.25 grams. After the combined structure **620** is placed within the mold **622**, the slug is molded, typically in a high temperature and high pressure operation. This molding operation, due to the high temperature and high pressure, vulcanizes and cures the rubber composition from the two slug portions into one unit and also causes this composition to flow through the perforations in the tags to create a unitary structure, such as the structure shown in **FIG. 3E**. In one exemplary embodiment, the core rubber composition is vulcanized/cured for eight minutes at a temperature of 325° Fahrenheit under a high pressure clamping of about 2 tons per square inch. After the molding process of operation **708**, the core is allowed to cool overnight at room temperature and then the surface is cleaned prior to injection molding of the cover material, such as shell **102** of **FIG. 3**A, over the core. Examples of suitable cover material are known in the art, including materials which are described in U.S. Pat. No. 5,538,794. After encasing the molded core into a shell as in operation **710** of **FIG. 7**, the ball may be processed in finishing operations which involve ball trimming, surface cleaning, stamping/logo application and painting. As noted elsewhere, embodiments of the invention may be used in golf balls constructed as one-piece balls or more than 2 piece balls (e.g. balls having more than one core).

[**0100**] While several of the examples described herein show the slicing or forming of two slug portions (e.g. **602** and **604** in **FIG. 6B** or **1202** and **1204** in **FIG. 10B**), it will be recognized that more than two slug portions may be combined together with one or more tags to form a golf ball. For example, a cylindrically shaped slug (such as the slug **600** in **FIG. 6A**) may be sliced into four pieces which are then combined with a tag or two tags or four tags to create an assembly which is similar to structure **620** and which can then be molded into a golf ball or golf ball core. The four pieces may each be half cylinders which have equal sizes. These four pieces may alternatively be separately formed by an extruder to create the four pieces rather than slicing a larger cylindrical slug. These four pieces may receive four tags between the inner faces of the pieces. **FIG. 6E** shows, in an exploded top view, an example of four slug portions **631**, **632**, **633** and **634** receiving four tags **637**, **638**, **639** and **640**; this assembly is, after the tags are inserted, placed into a molding chamber to form the golf ball (in the case of a one-piece golf ball construction) or a core of a golf ball (in the case of a more than one piece golf ball construction).

[**0101**] A description of various embodiments of a handheld transmitter/receiver which may be used as the handheld unit **14** of **FIG. 1A** will now be provided in conjunction with **FIGS. 8A, 8B**, and **8**C. In the exemplary embodiments of **FIGS. 8A, 8B** and **8**C, the handheld unit consists of a battery powered transmitter and antenna radiating the radio frequency signal in the 902-928 MHz band, and an antenna and a receiver operating over the 1804-1856 MHz band, and an audio and visual interface to the user of the handheld unit.

The audio interface may optionally be an earphone rather than a speaker, and as an option, the handheld unit may utilize a vibrating transducer to alert the user to the presence of a ball. A visual display such as a meter or a string of LEDs may also provide a proximity measure to the user so that the user can tell whether or not the user is getting closer to the ball or further from the ball as the user walks around searching for the ball.

[0102] The handheld unit **800** shown in **FIG. 8A** includes a battery powered transmitter and battery powered receiver and an audio and visual interface. The implementation shown in **FIG. 8A** uses a frequency-hopping transmitted signal that complies with the Federal Communications Commission Rules Part 15.247 for intentional radiators. The radio frequency transmitted signal originates in the synthesizer **804** which is an oscillator at twice the transmitted frequency which receives a frequency sweeping sawtooth modulation from a sweep driver **806**. The synthesizer **804** also receives a control from the hopping-implementing synthesizer driver **802** which causes the synthesizer to hop from frequency to frequency within the band 1804-1856 MHz. The output from the synthesizer **804** is amplified by the buffer amplifier **808** and directed to a divide-by-two divider **810**, the output of which is directed to a filter **812**. The output from the filter **812** is directed to a transmitter amplifier chain **814** which provides an output to a filter **816** which in turn provides an output to the transmitter antenna **818**, thereby transmitting the radio frequency signal in the range of 902-928 MHz. The transmitter antenna is moderately directive and produces the radiated signal which can be reflected by a tag in a lost golf ball. The diode in the tag causes the reflected signal to have double of the frequency of the received signal, which received signal was emitted by the transmitter antenna. The proximity of the handheld unit to the golf ball will in large part determine the magnitude/intensity of the reflected signal which can then be indicated by one of the user interfaces such as the speaker or earphones or visual display or the vibrating transducer in the handheld unit.

[0103] The receiver of the handheld unit **800** includes a moderately directive receiver antenna **830** which receives the reflected second harmonic signal produced by the diode in the lost golf ball. This received signal is filtered in filter **828** which provides the filtered output to a receiver amplifier chain **826** which amplifies the filtered signal, which is then outputted to a further filter, filter **824**, the output of which is directed to a mixer **822**. The mixer **822** also receives the filtered output of the amplifier **808** through the filter **820**. The output of the mixer **822** is an audio frequency difference product of the second harmonic of the frequency swept transmitter signal, and the signal received from the frequency-doubling tag within the ball. The audio frequency difference product has a pitch that is determined by the sweeping of the transmitter frequency and the time delay between the transmitted and received signals. Thus, the pitch of the audio frequency difference product provides an indication of the distance between the handheld unit and the lost golf ball. The audio frequency difference product from the mixer is provided through a DC block **831** which provides the output (filtered for DC level) to an amplitude equalizer and filter **832** which provides an output to an audio amplifier and conditioner **834** which drives the speaker **836**. A visual display **838** is also coupled to the amplifier and conditioner **834** to provide a visual display of the proximity of the golf ball and then optional handheld vibrating transducer **840** may provide a vibrating output, the intensity of the vibration increasing as the ball approaches the handheld unit. It will be appreciated that any particular handheld unit may have one or more of these indicators. For example, it may have only a speaker or a headphone output or it may have only a visual display or only a vibrating display or it may have two or more of these outputs.

[0104] The handheld unit **850** of **FIG. 8B** is similar in structure and operation to the handheld unit **800** except that the frequency synthesizer **856** operates in the band **902-928** MHz rather than double that frequency as in the case of synthesizer **804**. Accordingly, there is no divide-by-two divider in the handheld unit **850** but rather there is a **2**×frequency multiplier **868** in the handheld unit **850**. The handheld unit **850** is an implementation that uses a frequency-hopping transmitted signal that complies with the FCC Rules Part 15.247 for intentional radiators. The radio frequency transmitted signal originates in the frequency synthesizer **856** which is an oscillator at the transmitted frequency which receives a frequency sweeping sawtooth modulation from a sweep driver **854**. The synthesizer **856** is controlled by a frequency hop driver **852**. The oscillator output from synthesizer **856** is amplified by the buffer amplifier **858** which provides an output to the filter **860** and an output to the frequency doubler **868**. The output from the amplifier **858** is filtered in filter **860** and amplified in the transmitter amplifier chain **862** and then filtered in filter **864** to produce a transmitted signal which is transmitted from the moderately directive transmitter antenna **866** in the band of 902-928 MHz. This transmitted signal may be reflected by a tag, causing a reflected signal at a double harmonic (twice the frequency) of the received signal from the transmitter antenna. The receiving antenna **880** picks up this reflected second harmonic and provides this received signal to the filter **878** which provides an output to a receiver amplifier chain **876** which provides an output to a filter **874**. Thus the received signal is filtered and amplified and provided as an RF input to the mixer **872** which also receives a filtered input from the 2×frequency multiplier **868**. The mixer **872** produces at its output an audio frequency difference product of the second harmonic of the frequency swept transmitter signal and the signal received from the frequency-doubling tag within the ball. The audio frequency difference product has a pitch that is determined by the sweeping of the transmitter frequency and the time delay between the transmitted and received signals. This audio frequency difference product is output through a DC block **881** to an amplitude equalizer and filter **882** which in turn outputs a signal to the audio amplifier and conditioner **884** which drives the speaker **886**. In addition, the amplifier and conditioner **884** provides an output to a visual display and the vibrating transducer **888**.

[0105] **FIG. 8C** shows another embodiment for a handheld unit which consists of a battery powered transmitter and an antenna radiating at about 915 MHz, and an antenna and receiver operating at about 1829 MHz. The implementation of **FIG. 8C** uses a direct sequence spread spectrum radar system which includes the transmitter and a receiver and a control unit, which in this case is a field programmable gate array (FPGA). The basic clock signal for the FPGA **902** is obtained from the local oscillator **922** which provides inputs to the amplifiers **920** and **924** which in turn drive the FPGA **902** and a phase-locked loop synthesizer **926**. During a

power-on operation, the FPGA **902** programs the phase-locked loop synthesizer **926** to the correct frequency of operation. This occurs through the control lines from the FPGA **902** to the phase-locked loop synthesizer **926**. The phase-locked loop synthesizer **926** is used to generate a local oscillator (LO) signal for the receiver. A receiver LO frequency is 1818.30 MHz. A frequency divider **930** is used to generate a 909.15 MHz local oscillator for the transmitter which is filtered by a band pass filter **931** (centered at 909.15 MHz ("FC")). Deriving the transmit local oscillator from the receiver's local oscillator not only eliminates the requirement for a second phase-locked loop synthesizer, but virtually eliminates any frequency error (e.g. frequency drift) between the transmitter and the receiver. The transmit local oscillator is modulated using a Quadrature Modulator circuit. This Quadrature Modulator enables a single circuit to perform all of the following features: (1) it performs a basic On-Off Keyed (OOK) modulation used in radar systems. Operating with OOK modulation not only provides an audio tone for the system but also minimizes the heat generated by the amplifiers and the transmitter, such as amplifiers **912** and **914**; (2) the Quadrature Modulator produces a Binary Phase-Shift Keying (BPSK) modulation of the local oscillator signal and performs what is called a Direct-Sequence Spread Spectrum signaling. This allows the handheld unit to operate in the 915 MHz industrial, scientific and medical (ISM) and as a license-free device operated under FCC Part 15.247; (3) the Quadrature Modulator **904** provides a Single-Sideband translation of the local oscillator input signal to a transmit output frequency of 914.50 MHz. That is, the local oscillator signal is shifted up in frequency by 5.35 MHz. This frequency translation results in a received signal that is offset from the receiver's local oscillator frequency by 10.7 MHz. Having the received frequency that is offset from the receiver's local oscillator reduces the magnitude of unwanted local oscillator leakage into the receiver's high gain amplifier chain, which may include amplifiers **942** and **944** and **948** as shown in **FIG. 8C**. The output of the Quadrature Modulator **904**, which includes multipliers **906** and **908** as well as the mixer **910**, is a Direct-Sequence, Spread Spectrum signal containing OOK modulation at a frequency of 914.5 MHz. This signal is filtered by two band pass filters **905** and **913** and amplified by two amplifiers **912** and **914** to approximately 1 watt and is sent to a transmit antenna **916**. The transmit antenna also has a harmonic trap **916**A, which is used to further reduce any second harmonic distortion, which if radiated, would interfere with the received signal from the tag in a lost golf ball. The Quadrature Modulator **904** is controlled by the FPGA **902** which provides and generates a Pseudo-Random Binary Sequence used for the Direct-Sequence Spread Spectrum signal. The FPGA **902** also provides and produces the OOK control signals to the modulator **904** and generates and provides the In-Phase and Quadrature-Phase signals applied to the Quadrature Modulator **904**.

[**0106**] An alternative embodiment for the handheld unit shown in **FIG. 8C** is to change feature (1) of the Quadrature Modulator to implement 90-degree phase shift keying at the audio tone frequency, instead of On-Off keying. Features (2), Direct-Sequence Spectrum Spreading, and (3), Single-Sideband translation remain the same. The FPGA **902** produces the 90-degree phase shift keying signal applied to the Quadrature Modulator **904**. When the tag in the golf ball doubles the transmitted frequency from 914.5 MHz to 1829 MHz, the tag also doubles the amount of phase shift keying modulation to 180-degree keying. The re-radiated signal is active 100% of the time, instead of nominally half-time for On-Off keying, and the receiver has twice as much signal energy to process in the FPGA, A/D converter, and Post Demodulation processing. Thus the maximum useable range for finding the tag-equipped golf ball is increased, with a related increase in power drain on the battery.

[**0107**] The receiver of the handheld unit **900** operates on the principle that the tag in the golf ball will produce a harmonic reflected signal, which in one embodiment, doubles the transmitted frequency of 914.5 MHz to a reflected signal of 1829 MHz which re-radiates this doubled signal back to the receiver of the handheld unit. When a BPSK signal is squared, the modulation is removed and the energy in the modulated sidebands is collapsed back into a single spur at a frequency twice the carrier frequency. Thus the target (e.g. a tag in a lost golf ball) not only performs frequency doubling (or generating some other harmonic), but in the process, despreads the signal for free, eliminating the requirement for despreading circuitry in the receiver of the handheld unit. Therefore, what is re-radiated from the tag in the golf ball is an OOK modulated signal at 1829 MHz. The receiver receives this re-radiated (reflected) signal at the receive antenna **940** and filters and amplifies this 1829 MHz signal through the amplifiers **942** and **944** and the band pass filters **941** and **943**. Thus, the received signal from antenna **940** is filtered in band pass filter **941** which outputs its filtered signal to the amplifier **942** which outputs its filtered signal to the amplifier **942** which outputs an amplified signal to the band pass filter **943** which outputs a filtered signal to the amplifier **944** which outputs a signal to the mixer **946**. The other input to the mixer **946** is the received local oscillator signal at a frequency of 1818.3 MHz which is received from the band pass filter **932**. The mixer **946** performs a down-conversion to a 10.7 MHz intermediate frequency (IF) by multiplying the amplified 928 MHz signal received from amplifier **944** by the local oscillator signal of 1818.3 MHz received from the band pass filter **932**. This multiplication (also called mixing) produces two signals, one at the sum frequency of 1347.3 MHz and the other at the difference frequency of 10.7 MHz. The sum frequency is filtered out by the 10.7 MHz intermediate frequency filter **947** which provides an output to the amplifier **948**. This intermediate frequency filter **947** has a very small bandwidth (15 kHz) that also eliminates most of the received noise and adjacent RF (Radio Frequency) interference. What remains out of the intermediate frequency is a 10.7 MHz, OOK modulated signal that is amplified by amplifier **948** and further amplified by an amplifier **950** which includes a generator circuit **950** that generates a Receive Signal Strength Indicator (RSSI). This RSSI generator is not unlike an amplitude modulation (AM) detector, but with a logarithmic amplitude response. This RSSI function removes the 10.7 MHz carrier, resulting in just the audio tone that was applied to the signal in the transmitter. An 8-bit analog-to-digital (A/D) converter **952** converts the RSSI signal to a sampled digital signal. This digitized signal then undergoes post-demodulation signal processing in the FPGA **902** to further enhance the signal by reducing the noise by as much as 20 dB. This post-demodulation signal processing is performed by a Synchronous Video Generator (SVI) which performs an Exponential Ensemble Average across multiple OOK radar bursts. The FPGA **902** is programmed to include

the SVI which is used for the post-demodulation signal processing. The FPGA **902** converts the output of the SVI circuit back to audio, which is amplified by an amplifier **958** which drives a speaker or headphones **960**. The digital-to-analog converter **962** may be used in conjunction with the FPGA **902** to convert the digital audio output to an analog output for purposes of driving the speaker **960** or headphones. Optionally, a series of LEDs or a meter driven by the digital-to-analog converter **956** may also provide a visual indication of the proximity of the golf ball to the user of the handheld unit **900**.

[**0108**] **FIG. 8D** shows another embodiment for a handheld unit which consists of a battery powered transmitter and an antenna radiating at about 915 MHz and an antenna and a receiver operating at about 1829 MHz. The handheld unit **1000** of **FIG. 8D** is similar in some ways to handheld unit **900** of **FIG. 8C**. The handheld unit **1000** includes band pass filters **1005** and **1013** and amplifiers **1012** and **1014** in the transmitter portion of unit **1000**. In addition, this transmitter portion includes a transmit antenna **1016** which receives the amplified signal produced by amplifiers **1012** and **1014** through a harmonic trap **1016**A. The transmitted signal originates from a crystal oscillator **1022** and phase locked loop synthesizer **1026** which produce a signal at a reference frequency of about twice the transmitted signal. A divide-by-two frequency divider **1030** and a band pass filter (BPF) **1031** provide the transmitter local oscillator signal to signal generator **1004** which is controlled by the PLD (Programmed Logic Device) **1002**. The output of the signal generator **1004** drives the amplifiers **1012** and **1014**, and the amplifier **1014** is controlled by OOK control from PLD **1002**. This OOK control pulses the transmitter on and off, in one embodiment, with an On duty cycle of 50% or less. This will save battery life and minimize heat generated in the transmitter. The transmitter may also include an adaptive power control which could extend battery life (and simplify the handheld's user interface). When no signal is detected and when the receive signal strength is more than adequate for detection, the unit could scale back the transmit power automatically, thus conserving battery power and freeing the user from having to adjust a power transmit control knob. The receiver portion of the handheld unit includes receiver antenna **1040** which is coupled to BPF **1041** which in turn is coupled to amplifier **1042**. The output of amp **1042** drives amp **1044** through BPF **1043**. The mixer **1046**, which receives the output of amp **1044**, down converts this output to a 10.7 MHz intermediate frequency signal which is amplified (in amp **1048**) and filtered (in BPF **1049**) and then processed by amplifier **1050** (which may be an Analog Devices AD **607** amplifier which generates an RSSI signal). The amplitude of the received signal may be measured by a Cordic transform in microcontroller **1001**. The RSSI signal is converted by an Analog to Digital converter in the microcontroller **1001** which in turn drives a D/A converter and an amplifier and speaker **1060** (or some other appropriate output device).

[**0109**] Several three-dimensional tags having a substantial surface area in more than one plane will now be described by referring to **FIGS. 9A through 9H** and **10**A and **10**C. It will be appreciated that these are some of many possible examples of three-dimensional tags, and it will be appreciated that the previously described planar tags may be formed to have a substantially non-planar shape in the manner described below.

[**0110**] **FIG. 9A** shows an example of a spiral tag **1100** having a first spiral antenna portion **1101** and a second spiral antenna portion **1102** which are coupled together through the diode **1103**. The spiral antenna portion **1102** includes an end **1107**, and the spiral antenna portion **1101** includes an end **1106**. In the case of the tag **1100**, the winding direction through both antenna portions is maintained, as can be seen by beginning at the end **1107** and following the direction of the winding of the antenna portion **1102** through and into the antenna portion **1101**, and ultimately arriving at the end **1106** while maintaining the same winding direction through both of these spiral antenna portions.

[**0111**] The example of the spiral antenna **1120** shown in **FIG. 2B** is a case where the first and second antenna portions are mirror images or complements of each other; thus the winding direction is reversed between the two antenna portions **1121** and **1122**. These antenna portions are coupled together by the diode **1123** as shown in **FIG. 9B**. The complement or mirror image nature of the two spiral antenna portions can be seen by beginning at the end **1127** and winding in a winding direction of the spiral antenna portion **1122**, which is an opposite winding direction relative to the spiral antenna portion **1121**, where the winding begins at the end **1126**. An electrical schematic of the spiral tags **1100** and **1120**, as well as the other spiral tags shown in **FIGS. 9D through 9H**, is shown in **FIG. 9C**. The tag **1130** of **FIG. 9C** includes a diode **1133** which is coupled between antenna portions **1131** and **1132**. An inherent inductor, as shown in **FIG. 9**C, is coupled in parallel across the diode **1133**. The tag **1130** works in a manner which is similar to the tag shown in **FIG. 2**A, except that such a tag has substantial surface area in more than one plane. The multiplanar or three-dimensional tag described herein has improved findability relative to a tag which is substantially in one plane (e.g. such as the tag shown in **FIG. 3A**) due to the fact that single-plane tags have dead spots. An example of a dead spot is when the tag lands in an orientation in which the plane of the tag is perpendicular to the waves which are transmitted from the handheld unit (see the signal **16** which is represented as waves originating from the handheld transmitter).

[**0112**] The spiral tags described herein, such as spiral tags **1100** and **1120**, allow for the diode to be located near the center of the ball, which is desirable for protection from shock and for meeting golf ball flight and balance requirements. The structure of these tags provides greater cross-sectional areas in all planes, and this provides better performance than a single-planar tag which might land in an orientation where very little of the transmitted power is received by such a single-planar tag. The structures of the spiral antenna portions naturally form an ideal shape for shock absorption. It will be appreciated that control of the winding radius and pitch may be used to create a structure which is resonant of both the transmit (e.g. 915 MHz) and receive (e.g. 1830 MHz) frequencies.

[**0113**] **FIGS. 9D, 9E** and **9**F show examples of spiral tags which are contained within slugs which are used to form golf ball cores. These slugs are similar to the slug shown in **FIG. 6C** which includes the tag **606**. The slugs shown in **FIGS. 9D, 9E** and **9**F may be formed by extruding the ball material around the spiral tag or by inserting the spiral tag into a void or cutout in each half-portion of a slug. After the spiral tag has been placed within the slug, then the combination may be molded in a high pressure and high temperature vulca-

nization process which is similar to that described relative to **FIG. 6D** above. This vulcanization process or molding process creates the spherical golf ball core which can then be encased in a shell as described above.

[**0114**] The slug assembly **1140** includes a spiral tag having a diode **1143** which is coupled between spiral antenna portions **1141** and **1142**. This spiral tag is similar to the spiral tags shown in **FIGS. 9A, 9B** and **9**C. The spiral tag is included or encased within the slug material **1135** in an extrusion operation described above or by inserting the spiral tag into a void between two half-portions of the slug material **1145**. In the case of **FIG. 9**E, the spiral tag has the spiral antenna portions or windings inverted as shown in FIG. **9**E, with the diode **1153** coupled between these antenna portions **1151** and **1152**. The spiral tag is encased within the slug material **1155** to form the slug assembly **1150** shown in **FIG. 9E**. The spiral tag of **FIG. 9E** is electrically similar to the circuit shown in **FIG. 9C**. The spiral tag in the slug assembly **1160** of **FIG. 9F** is the same as the spiral tag shown in **FIG. 9E** except that the spiral antenna portions are formed from flat wire (see, for example, **FIG. 9G**) relative to the cylindrical wire used in **FIG. 9E** (see, for example, **FIG. 9H**). The slug assembly **1160** has a spiral tag which includes the diode **1163** which is coupled between spiral antenna portions **1162** and **1161** which are formed out of flatter wire than the spiral antenna portions **1151** and **1152**. The spiral tag of **FIG. 9F** is included within slug material **1165** to form this slug assembly **1160**. It will be recognized that these spiral tags have perforations within their outer perimeters which allow a material to flow through the tag (e.g. in a molding operation).

[**0115**] The difference between the types of wires which may be used for the spiral antenna portions is shown in **FIGS. 9G and 9H**. In the spiral tag of **FIG. 9**G, the diode **1173** couples together flat wire antenna portions **1172** and **1171**, which have been formed into spiral antenna portions. This tag **1170** is electrically similar to the tag shown in **FIG. 9C**. The tag **1180** shown in **FIG. 9H** includes a diode **1183** coupled between spiral antenna portions **1181** and **1182**. This tag **1180** is electrically similar to the tag shown in **FIG. 9C**. The tag **1180** uses wire which has a cylindrical cross-section rather than the flat wire shown in the tag **1170** of **FIG. 9G**.

[**0116**] **FIG. 13** shows an exemplary method **1301** for constructing a golf ball, which in the case of this method, has a spiral tag; this method may also be used with the various other tags described herein, such as the multiplanar tags of **FIGS. 10A and 10C** or the planar tags of **FIGS. 3A and 4A**. This method may be used to construct one-piece or two-piece or more than two piece golf balls. The extruder **1303** extrudes precursor portions **1309** and **1311** from extrusion openings **1307** and **1305** respectively; the extruder **1303** pushes, in one embodiment, unvulcanized rubber material which is used to form the core of a golf ball (and hence it may be considered a core precursor material). The extruder pushes the material through the openings which have been designed to produce properly sized precursor portions. A knife or blade may be used to create a beginning/front edge and a back edge on the portions. The portions **1309** and **1311** are then respectively transported (e.g. by a conveyor belt) to holders or fixtures **1319** and **1317** as indicated by arrows **1315** and **1313**. These holders serve to hold the portions in place while a stamper **1323**, having a mold **1321**, robotically stamps an imprint of the mold **1321** into the flat face of the portions **1309** and **1311**. The mold is designed to have a similar (e.g. substantially the same) shape and size as the tag (e.g. tag **1330**) which is to be placed within the slug portions. The slug portions **1309** and **1311** are soft enough, and the mold **1321** hard enough, that a void, having a shape and size which is designed to receive at least a portion of the tag, is created in the face of the portions by the mold. It will be appreciated that the void, on one of the portions, is designed to normally hold about one-half of the tag (and the other half is held in the void in the face of the other portion). After stamping the voids in the faces of the portions **1309** and **1311**, two stamped portions **1327** and **1325** are created. These two stamped portions **1327** and **1325** are then combined with a tag **1330** through a robotic arm **1333** which places the tag **1330** into at least one of the voids **1328** and **1329**, in the portions **1327** and **1325**. In one embodiment of this method, after the tag **1330** is positioned within at least one void, the robotic arm **1333** releases the tag **1330**, and this allows the two half portions **1327** and **1325** to be joined together with the tag **1330**, in the voids **1328** and **1329**, sandwiched between the two portions. This assembly **1337** of tag **1330** and portions **1327** and **1325** may then be processed further by placing the assembly **1337** into a molding chamber to mold the ball or ball core (in a manner which is similar to the operation shown in **FIG. 6D**). A camera and a motion/position control system may be used to properly position the tag **1330** into at least one of the voids **1328** and **1329**. Alternatively, after the stamper **1323** is removed from the slug portion it imprinted, and before the portion is removed from its holder, another robotic arm may place a tag into the just imprinted void while the slug portion is fixed within the holder. As another alternative, the tag may be manually (e.g. by a human) placed within a void of a first slug portion and then the other slug portion is joined manually to the first slug portion to create the assembly **1337**. Further, the stamping operation may also be performed manually.

[**0117**] All of the single-plane tags described above may be formed in a manner to create a three-dimensional or multi-planar tag by twisting or bending or otherwise forming such tags so that they have a three-dimensional shape. **FIG. 10A** shows an example, in a top view, of an "S" shaped tag **1200**. This tag may be any of the tags shown in **FIGS. 3A through 5P**, and it may be formed by twisting or bending the antenna portions, prior to attaching the diode or after attaching the diode. After the tag **1200** is formed, it will be placed within a slug material which has been cut or otherwise formed to have a conforming shape to receive the "S" shaped tag **1200**. An example of such slug portions is shown in **FIG. 10B** which includes slug portions **1202** and **1204** having been cut (or formed) into a shape to receive the "S" shaped tag. Thus, as shown in **FIG. 6**C, after the tag **1200** is placed within the slug portions **1202** and **1204**, the slug assembly may then be placed in a molding chamber, similar to the chamber shown in **FIG. 6**D, to mold the tag within the slug material to create a golf ball core having the tag. As noted above, the tag may include multiple perforations or at least one perforation, allowing the core material to flow through the perforations in the multiplanar tag to provide a unitary structure such as that shown in **FIG. 3E** in the case of a multiplanar tag.

[**0118**] **FIG. 10C** shows another example of a multiplanar tag formed from a single-plane tag such as any one of the tags discussed relative to **FIGS. 3A through 5P**. In the case

of **FIG. 10**C, the tag may be bent or twisted or otherwise formed into the shape shown in **FIG. 10C**. **FIG. 10C** is a top view of the tag **1210**. **FIG. 10D** shows two slug portions **1212** and **1214** which have been cut or otherwise formed to receive the tag **1210**. The cut in the slug creates a void into which the tag **1210** is placed. **FIG. 10D** is a top view of these slug portions and shows how the slug portions can receive the tag **1210**. After receiving this tag, the slug portions may be brought together and placed within a molding chamber to mold the slug with the tag **1210** into a golf ball core, similar to the operation shown in **FIG. 6D** above.

[**0119**] Examples of the use of carts with handheld units of the present invention will now be described relative to **FIGS. 11A and 11B**. In the case of **FIG. 11A, a** golf cart **1250** which is motorized (e.g. an electric cart or gasoline powered cart) is shown having a cradle **1251** which is designed to receive and hold a handheld unit, such as the handheld unit **14** of **FIG. 1A**. A battery recharger system **1252** is coupled to the cradle **1251** to recharge the batteries (which may be rechargeable batteries) in the handheld unit which is placed within the cradle. Thus, when the handheld unit is not being used and is stored or stowed within the cradle **1251**, it is charged by a recharging system **1252** which may draw its power from the batteries of the golf cart (or some other existing electrical system of the golf cart). **FIG. 11B** shows an example of a pull cart which may be used in golf. The pull cart **1255** includes a cradle **1256** which is designed to receive a handheld unit, such as the handheld unit **14** of **FIG. 1A**. The pull cart is shown without a recharging unit, but it will be appreciated that optionally it may include a recharging unit (which includes a battery) to recharge the battery in the handheld unit while it is stored or stowed in the cradle **1256** of the pull cart **1255**. Golf bags, such as "shoulder bags," may also include a cradle or holster for holding a handheld unit. These bags, such as Belding bags, are typically slung over the golfer's shoulder and carried in this manner. These bags may optionally include a rechargeable battery to recharge the batteries in the handheld.

[**0120**] Various embodiments of the invention provide for methods of operating golf courses and methods of using findable balls with handhelds. The use of findable balls and handhelds will enable golfers to complete an 18-hole round of golf at a golf course in less time because the time spent looking for lost balls is substantially reduced. A golfer with a handicap in excess of 15 (more than 80% of worldwide golf players) will hit ten or more shots per round that do not land in the fairway. These off-fairway shots are typically not lost but can be found within a search time frame of about 10 seconds to 5 minutes. With a system as described herein, such as a findable ball and a handheld unit, this search time frame is minimized and the pace of play is not adversely impacted. In fact, a typical golfer equipped with a handheld unit and findable balls as described herein should experience an 8-12 minute acceleration in the time it takes him/her to complete an 18-hole round of golf. An 8-minute acceleration represents a 3% throughput improvement for golf course operators who expect an 18-hole round to take about 270 minutes. Golf course operators go to great lengths to communicate and enforce rapid pace of play. Score cards, golf cart signage, on-course signage and roving marshals all have a priority emphasis on speeding up play. Much like a restaurant needs to move tables, the golf course operator needs to get as many players as possible through the course in a given day. Thus, the findable balls and handhelds described herein may be provided by golf course operators to the players so that the golf course operators may achieve this accelerated throughput which will increase the profitability of the golf course operator by increasing revenue to the golf course operator. There are numerous ways in which golf course operators may utilize aspects described herein. For example, a golf course operator may give a discount, such as a discount on the green fee, to a golfer who will use a findable ball and handheld but not give such a discount to a golfer who does not use a findable ball and handheld. The golf course may rent or provide for free findable balls and handheld units to those golfers who do not have their own or may require all golfers to use findable balls and handheld units. A golf course may, after the course closes, cause its employees to search for findable balls containing tags which remain on the course after the course has closed in order to retrieve such balls. By doing so, the course will have fewer such balls and thus there will be fewer false positives (e.g. finding someone else's lost ball from a prior round of golf). The golf course may also employ other methods if findable balls and handheld units are used. For example, the golf course may decide to cut the grass less often in rough areas, allowing this grass to grow higher than is normally done in golf courses which do not use findable balls and handheld units to find the balls. This will tend to decrease expenses for the golf course. The golf course may charge for the use of a golf course (an 18-hole round of golf) based on the amount of time used if the golfer does not use a findable ball and handheld unit, but if the golfer does use a findable ball and a handheld unit, then the charge is a fixed amount or a fixed amount up to a certain amount of time to play the round of golf.

[**0121**] **FIG. 12** shows a flowchart of one particular method of using findable balls and a handheld. This method may be performed largely by the golf course. The method **1260** shown in **FIG. 12** is one example, and it will be appreciated that there are numerous other examples in which different operations are performed in different sequences or are not present or additional operations are present. Upon registering with the golf course, the golf course determines whether a golfer has findable balls and handhelds (operation **1261**). If the golfer does have findable balls and handhelds and will use them, then a green fee discount (or some other discount) or some other legal consideration is given to the golfer who will use the findable balls and handheld (operation **1263**). If the golfer does not use findable balls and a handheld, then in operation **1265** the golf course may rent or provide for free findable balls and handhelds for use by the golfer, but the golfer will not, in this example, receive a green fee discount. Thus, whether or not the golfer has brought findable balls and a handheld unit for use with the findable balls, all golfers after operations **1263** and **1265** will be using handhelds and findable golf balls (operation **1267**). If a ball gets lost, then a golfer may find the lost ball with the handheld in operation **1269**. After the golf course has closed for play (or after a round of golf has concluded), golf course employees may search for findable balls (using a handheld unit) which remain on the course. These balls are found and then removed from the course so that fewer false positives will occur for the next rounds of golf which are played. It will be appreciated that this is an optional operation (operation **1271**) which may not be performed by some golf courses. The operation **1271** may be performed at some

predetermined time (after the course closes) or otherwise (e.g. when it is decided that too many golfers are finding too many false positives). The operation may be performed after each round of golf or every other day after the course closes or once a week (e.g. Sunday night after the course closes) or at some other interval. In operation **1273**, the golf course decides to cut the grass in the rough areas less often, thereby allowing it to grow higher. It will also be appreciated that this operation **1273** is also optional. As noted above, these operations may be performed in a different sequence or with more or fewer operations than shown in **FIG. 12** which is one example of a method of operating a golf course. It will be appreciated that a typical golf course is not the same as a driving range, but golf courses may include a driving range. It will also be appreciated that the foregoing description applies to clubs which include golf courses.

[0122] It will be appreciated that numerous modifications of the various embodiments described herein may be made. For example, each golf ball could be printed with a unique identification number such as a serial number in order to allow a user to identify from a group of lost balls which lost ball is his/her lost ball. Alternatively, a quasi-unique identifier, such as a manufacturing date when the ball is manufactured, may be printed on the outside of the ball so that it can be read by a user to verify that a user's ball has been found within a group of lost balls which have been uncovered by the handheld unit. As noted above, the embodiments of the present invention may be used with one piece or three-piece golf balls in addition to two-piece golf balls described above. In certain embodiments of the present invention, the impedance of the diode may be matched to the impedance of the antenna. It will be appreciated also that the tags discussed above are passive tags having no active components such as semiconductor memory circuits, and the antenna does not need to energize such active components such as semiconductor memory components.

[0123] In the foregoing specification, the invention has been described with reference to specific exemplary embodiments thereof. It will be evident that various modifications may be made thereto without departing from the broader spirit and scope of the invention as set forth in the following claims. The specification and drawings are, accordingly, to be regarded in an illustrative sense rather than a restrictive sense.

What is claimed is:

1. A golf ball comprising:

a shell;

a core material which is encased within said shell; and

a tag having a diode coupled to an antenna, said tag being disposed within said core material, said tag having at least one perforation.

2. A golf ball as in claim 1, wherein said tag is designed to receive a radio frequency (RF) signal of a first frequency and to re-radiate a return RF signal of a second frequency.

3. A golf ball as in claim 2, wherein said second frequency is a harmonic of said first frequency.

4. A golf ball as in claim 2, wherein said radio frequency signal is emitted from a handheld device and wherein said golf ball satisfies the specifications of the United States Golf Association, and wherein said core material extends from one side of said tag to another side of said tag through said at least one perforation.

5. A golf ball as in claim 4, wherein said golf ball is findable by said handheld device up to a range of about 60 feet separating said golf ball and said handheld device and wherein said tag further includes a dielectric layer attached to said antenna and having said at least one perforation.

6. A golf ball as in claim 4, wherein said tag has a perimeter which is rounded along most of said perimeter and has an effective diameter which is slightly less than an inner diameter of said shell.

7. A golf ball as in claim 4, wherein said diode is coupled to said antenna by a compressible conductor.

8. A golf ball as in claim 1, wherein said core material extends from a first side of said tag, through said at least one perforation, to a second side of said tag.

9. A golf ball as in claim 1, wherein said tag is passive and said antenna does not serve to provide power to any memory elements.

10. A golf ball as in claim 8, wherein said tag is a substantially planar structure which is substantially symmetrical about an axis which coincides with a diametric axis of said golf ball.

11. A golf ball as in claim 10, wherein said diode is positioned near said diametric axis.

12. A golf ball as in claim 11, wherein said diode is coupled to said antenna near the center of said golf ball along said diametric axis.

13. A golf ball as in claim 11, wherein at least a portion of an outer perimeter of said tag conforms to an inner contour of said shell.

14. A golf ball as in claim 13, wherein said tag comprises an approximately "U" shaped portion which comprises a transmission line which is coupled to said antenna.

15. A golf ball as in claim 14, wherein a mid-line, which represents an approximate bisection of said approximately "U" shaped portion, is substantially aligned with said diametric axis.

16. A golf ball as in claim 15, wherein said diode is coupled to said antenna near a top portion of said approximately "U" shaped portion.

17. A golf ball as in claim 16, wherein said diode is positioned substantially off center relative to the center of said golf ball.

18. A golf ball as in claim 17, wherein said at least one perforation comprises an opening which surrounds said approximately "U" shaped portion.

19. A golf ball as in claim 13, wherein said tag comprises an approximately "T" shaped portion which comprises a transmission line which is coupled to said antenna.

20. A golf ball comprising:

a shell;

a core material which is encased within said shell;

a tag having an electrical element coupled to an antenna, said tag being disposed within said core material, said tag being detectable with a handheld transmitting/receiving device over a range of at least about 20 feet separating said handheld transmitting/receiving device and said tag, and wherein said golf ball has high durability and substantially complies with golf ball specifications of the United States Golf Association.

21. A golf ball as in claim 20, wherein said electrical element comprises a diode and wherein said tag is designed to receive a radio frequency (RF) signal of a first frequency and to re-radiate a return RF signal of a second frequency.

22. A golf ball as in claim 21, wherein said second frequency is a harmonic of said first frequency.

23. A golf ball as in claim 21, wherein said high durability includes being able to withstand at least 20 cannon test hits.

24. A golf ball as in claim 23, wherein said golf ball specifications comprise size, weight and flight characteristics.

25. A golf ball as in claim 23, wherein said handheld transmitting/receiving device complies, when transmitting, with regulations of the Federal Communications Commission.

26. A golf ball as in claim 23, wherein said handheld transmitting/receiving device, when transmitting, emits less than, or equal to, about 1 watt maximum peak power.

27. A golf ball as in claim 23, wherein said handheld transmitting/receiving device, when transmitting, emits less than, or equal to, about 4 watts effective isotropic radiated power.

28. A golf ball as in claim 21, wherein said tag comprises at least one perforation and said core material extends from a first side of said tag, through said at least one perforation, to a second side of said tag.

29. A golf ball as in claim 28, wherein said tag is a substantially planar structure which is substantially symmetrical about an axis which coincides with a diametric axis of said golf ball.

30. A golf ball as in claim 29, wherein said diode is positioned near said diametric axis.

31. A golf ball as in claim 30, wherein said antenna comprises a first wing and a second wing which are symmetrically disposed about said diametric axis, and wherein at least a portion of said at least one perforation separates at least a portion of each of said first wing and said second wing, and wherein each of said first wing and said second wing has at least a portion of an outer perimeter which substantially conforms to the outer diameter of said core material.

32. A golf ball as in claim 31, wherein said tag further comprises a transmission line which is coupled to said antenna and to said diode.

33. A golf ball as in claim 32, wherein said transmission line has an approximately "U" shaped portion.

34. A golf ball as in claim 32, wherein said transmission line has an approximately "T" shaped portion.

35. A golf ball as in claim 33, wherein said approximately "U" shaped portion is substantially bisected by said diametric axis.

36. A golf ball as in claim 34, wherein said approximately "T" shaped portion is substantially bisected by said diametric axis.

37. A golf ball as in claim 25, wherein said tag is a substantially planar structure which is substantially symmetrical about an axis which coincides with a diametric axis of said golf ball, and wherein said antenna comprises a first wing and a second wing which are symmetrically disposed about said diametric axis, and wherein each of said first wing and said second wing has at least a portion of an outer perimeter which substantially conforms to the outer diameter of said core material.

38. A golf ball as in claim 37, wherein said tag further comprises a transmission line which is coupled to said antenna and to said diode.

39. A golf ball as in claim 38, wherein said transmission line has a shaped portion which is substantially bisected by said diametric axis.

40. A system for finding a golf ball, said system comprising:

a golf ball which comprises a tag which has a diode coupled to an antenna;

a handheld transmitting/receiving device which is capable of detecting said tag over a range of at least 20 feet separating said handheld transmitting/receiving device and said tag, wherein said handheld transmitting/receiving device complies, when transmitting, with regulations of the Federal Communications Commission.

41. A system as in claim 40, wherein said handheld transmitting/receiving device, when transmitting, emits less than, or equal to, about 1 watt maximum peak power.

42. A system as in claim 40, wherein said handheld transmitting/receiving device, when transmitting, emits less than, or equal to, about 4 watts effective isotropic radiated power.

43. A system as in claim 40, wherein said golf ball complies with golf ball specifications of the United States Golf Association and wherein said golf ball has a construction which is at least a one-piece construction.

44. A system as in claim 40, wherein said tag is a substantially planar structure which is substantially symmetrical about an axis which coincides with a diametric axis of said golf ball.

45. A system as in claim 44, wherein said antenna comprises a first wing and a second wing which are symmetrically disposed about said diametric axis, and wherein each of said first wing and said second wing has at least a portion of an outer perimeter which substantially conforms to the outer diameter of said golf ball.

46. A system as in claim 45, wherein said tag further comprises a transmission line which is coupled to said antenna and to said diode.

47. A system as in claim 46, wherein said transmission line has a shaped portion which is substantially bisected by said diametric axis.

48. A system as in claim 47, wherein said diode is positioned near said diametric axis.

49. A method of making a golf ball, said method comprising:

forming a core precursor member having a first portion and a second portion;

placing a tag between said first portion and said second portion thereby creating a combined member, said tag having at least one perforation;

placing said combined member into a mold structure;

molding said combined member in the mold structure, said molding causing material from one of said first portion and said second portion to flow into said at least one perforation to contact the other of said first portion and said second portion;

enclosing a core member, obtained through said molding, in a shell.

50. A method as in claim 49, wherein said forming comprises splitting said core precursor member to create said first portion and said second portion.

51. A method as in claim 49, wherein said tag is completely enclosed within said first portion and said second portion.

52. A method as in claim 49, wherein said molding comprises exposing said combined member to a molding temperature and a molding pressure for a predetermined period of time.

53. A method as in claim 52, wherein said molding temperature is in a range from about 200° F. to about 350° F. and said molding pressure is in a range from about 1,000 pounds per square inch (psi) to about 5,000 psi and said predetermined period of time is in a range from about 1 minute to about 15 minutes.

54. A method as in claim 53 further comprising:

cooling said core member prior to said enclosing.

55. A method as in claim 54, wherein said core member is cleaned prior to said enclosing.

56. A method as in claim 53, wherein said molding cures a core material in said first and said second portions.

57. A method as in claim 53, wherein said tag is a substantially planar structure which is substantially symmetrical about an axis which coincides with a diametric axis of said golf ball.

58. A method as in claim 57 wherein said tag comprises a diode coupled to an antenna, said antenna comprising a first wing and a second wing which are symmetrically disposed about said diametric axis, and wherein at least a portion of said at least one perforation separates at least a portion of each of said first wing and said second wing, and wherein each of said first wing and said second wing has at least a portion of an outer perimeter which substantially conforms to the outer diameter of said core member.

59. A method as in claim 58, wherein said tag further comprises a transmission line which is coupled to said antenna and to said diode.

60. A method as in claim 59, wherein said transmission line has a shaped portion which is substantially bisected by said diametric axis.

61. A method as in claim 49, wherein said forming comprises molding said first portion and said second portion separately.

62. A golf ball comprising:

a ball material;

a tag disposed in the ball material, the tag having a first diode and a second diode which are both coupled to an antenna, said first diode and said second diode being coupled in parallel.

63. A golf ball as in claim 62, wherein said first diode has a first N region and a first P region and said second diode has a second N region and a second P region and wherein said first N region is coupled to said second P region and said first P region is coupled to said second N region.

64. A golf ball as in claim 63 further comprising an inductor coupled in parallel with said first diode and said second diode.

65. A golf ball as in claim 63 wherein said first diode and said second diode are formed in a monolithic integrated circuit which is surrounded by a package.

66. A golf ball as in claim 63 wherein said antenna comprises a first antenna portion and a second antenna portion and wherein said first N region is coupled to said first antenna portion and said first P region is coupled to said second antenna portion.

67. A golf ball as in claim 66 wherein said tag is substantially symmetrical about a diametric axis of said golf ball.

68. A golf ball as in claim 63 wherein said tag is designed to receive a radio frequency (RF) signal of a first frequency and to re-radiate a return RF signal of a second frequency and wherein said radio frequency signal is emitted from a handheld device and wherein said golf ball satisfies the specifications of the United States Golf Association.

69. A golf ball as in claim 68 wherein said tag comprises at least one perforation.

70. A golf ball as in claim 69 wherein said ball material extends from one side of the tag to another side of the tag through the at least one perforation.

71. A golf ball as in claim 63 wherein the tag has a substantially planar structure.

72. A golf ball as in claim 63 wherein the tag has substantial surface area in more than one plane.

73. A golf ball as in claim 63 wherein the tag has a spiral shape.

74. A golf ball comprising:

a ball material;

a harmonic tag disposed in the ball material, the tag having substantial surface area in more than one plane.

75. A method for operating a golf course, the method comprising:

determining whether a golfer will use a system to find a golf ball;

providing a legal consideration to the golfer if the golfer will use the system when playing on the golf course.

76. A method as in claim 75 further comprising:

requiring at least a group of golfers to use the system, which is a handheld system.

77. A method as in claim 75 further comprising:

searching, by golf course personnel, for lost golf balls from rounds of golf which have ended.

78. A method as in claim 75, wherein the legal consideration is at least one of (a) a green fee discount; (b) a credit toward a future playing of golf; (c) a monetary payment or credit; or (d) a promise to perform an obligation.

79. A method for operating a golf course, the method comprising:

allowing a golfer to play on the golf course;

searching, by golf course personnel, for lost golf balls from rounds of golf which have ended.

80. A method for operating a golf course, the method comprising:

providing a handheld system for finding a golf ball;

requiring a golfer, as a condition of using the golf course, to use the handheld system while playing on the golf course.

81. A method as in claim 80 wherein the providing is one of (a) allowing the golfer to use a handheld system which is owned by the golfer; or (b) allowing the golfer to use a handheld system which is not owned by the golfer.

82. A slug assembly for use in making a golf ball, the slug assembly comprising:

a first slug portion;

a second slug portion;

a tag disposed between the first slug portion and the second slug portion, one of the first slug portion and the second slug portion having a void on its face for receiving the tag.

83. A golf ball comprising:

a ball material;

a tag disposed in the ball material, the tag having a diode coupled to an antenna, said tag having at least one perforation.

84. A golf ball as in claim 83 wherein said ball material is a core material and wherein said at least one perforation is within an outer perimeter of the tag.

85. A method for making a golf ball, the method comprising:

forming a first precursor portion;

forming a second precursor portion;

combining into an assembly the first precursor portion and the second precursor portion with a tag.

86. A method as in claim 85 wherein said forming the first precursor portion comprises extruding a material through a first opening and said forming the second precursor portion comprises extruding said material through a second opening.

87. A method as in claim 86 further comprising:

molding said assembly into a golf ball core.

88. A method for making a golf ball, the method comprising:

forming a precursor portion;

forming a void in said precursor portion;

inserting at least a portion of a tag into said void.

89. A method as in claim 88 wherein said forming said first precursor portion comprises extruding said first precursor portion and wherein a second precursor portion is also extruded and wherein said void is a first void in said first precursor portion and wherein a second void is formed in said second precursor portion.

90. A method as in claim 89 wherein said first void and said second void are formed by stamping.

91. A method as in claim 90 further comprising:

molding said first precursor portion and said second precursor portion and said tag.

92. A method as in claim 91 wherein said first and said second voids are robotically stamped and wherein said tag is inserted robotically.

* * * * *