Sept. 4, 1956 V. W. VAN ORNUM ET AL 2,761,617

AIR-DRIVEN BLOWERS

Filed July 7, 1953

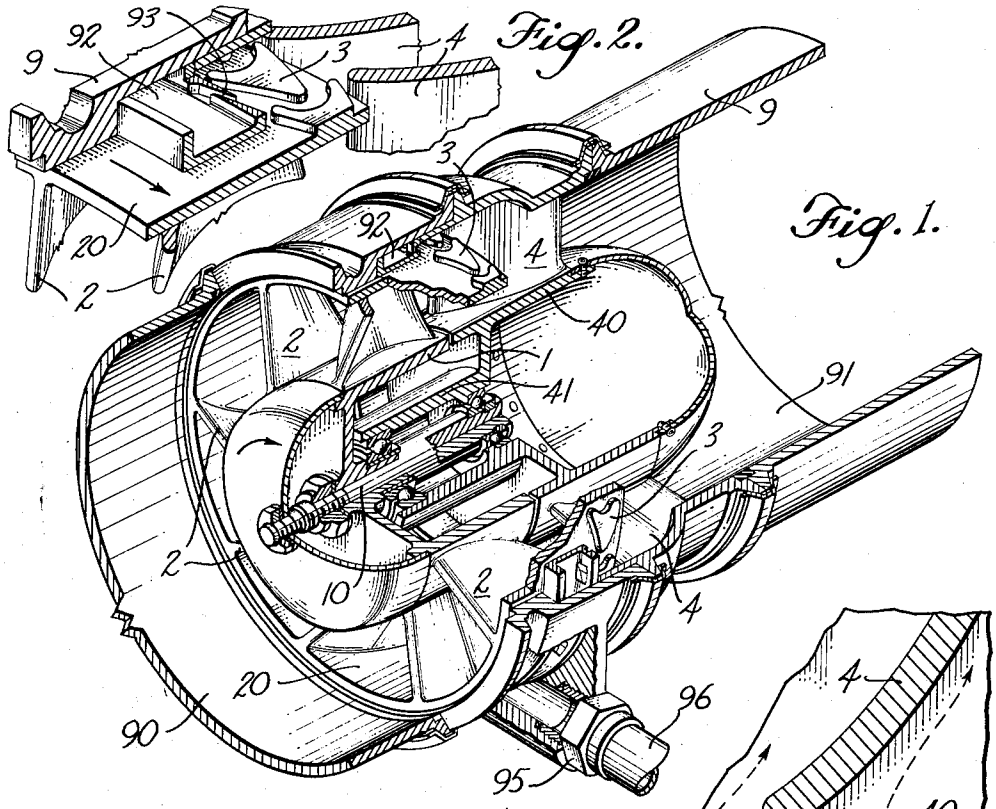

Fig. 1.

Fig. 2.

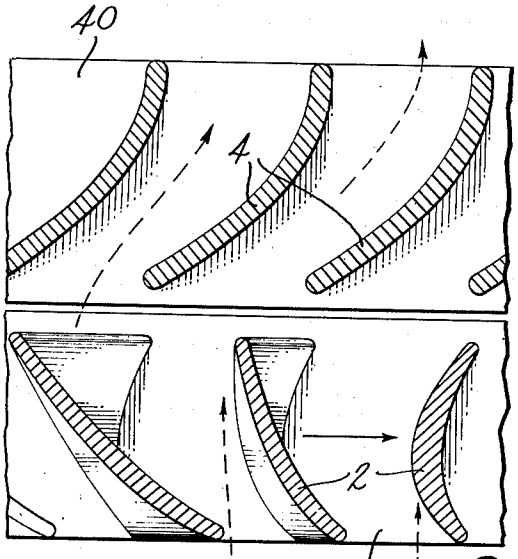

Fig. 3.

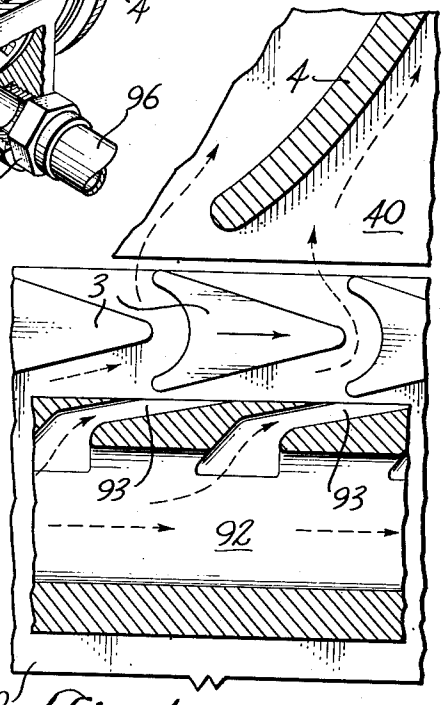

Fig. 4.

INVENTORS.
VERN W. VAN ORNUM
JOHN P. LIDRAL

BY

Raynolds Beach & Christensen

ATTORNEYS

United States Patent Office

2,761,617

Patented Sept. 4, 1956

2,761,617

AIR-DRIVEN BLOWERS

Vern W. Van Ornum, Bellevue, and John P. Lidral, Seattle, Wash., assignors to Boeing Airplane Company, Seattle, Wash., a corporation of Delaware

Application July 7, 1953, Serial No. 366,456

1 Claim. (Cl. 230—116)

Gas turbine engines make quite satisfactory power plants, and may be used for propelling vehicles, or in stationary installations. To a certain degree in slow-moving vehicles, and more decidedly in stationary installations, a rather considerable volume of cooling air is required for oil coolers and other equipment associated with such a gas turbine, which needs cooling. The turbine itself includes a compressor section which delivers a large volume of air, but this air is highly compressed, and in being compressed its pressure and its temperature are both raised too high to be used satisfactorily for cooling purposes. Moreover, it is frequently the case that a larger volume than can be economically bled from the compressor section of the turbine engine is required for cooling purposes.

According to the present invention a small percentage of the compressed air from the compressor section of the turbine engine is bled off and is utilized to drive an air turbine, in which use its velocity is helpful and its elevated temperature is of no consequence. The air turbine effects rotation of a blower or fan arranged to move a rather large volume of air. The bled-off high pressure air loses a great deal of its force and much of its temperature in performing work in the air turbine, but still has appreciable movement, and by its expansion constitutes now an important percentage of the total volume required, therefore, according to the present invention the air discharged from the air turbine is caused to mingle with the air advancing under the influence of the air turbine driven blower, the two moving in the same axial direction through the blower housing and joining to augment the volume of air available. The combined flow should be smoothed out, so that the two volumes of air in commingling are freed to a large extent of their turbulence, and are made available in large volume for cooling purposes.

The present invention has for an object the production of a blower of the general nature described, which shall be compact and simple in construction, and which has a fair degree of efficiency in the utilization of the bled-off force of high compression air, and which produces a high volume of cooling air, for the reasons and from the sources explained above.

It is a further object of the present invention to provide a blower of the nature indicated in which the flow of air is in all instances, and from all sources, in the same general axial direction with no counterflow.

A still further object is to locate the turbine section of such a blower in the most advantageous location, namely at the peripherally outer portion of the blower section, but shielded therefrom, whereby to obtain the highest peripheral velocity of the blower.

With these objects in mind, and others as will appear more particularly hereinafter, this invention comprises the novel blower assembly as a whole, and the novel combination and arrangement of the several parts thereof, all as is shown in a preferred form in the accompanying drawings, and as will be more fully explained hereinafter

and set forth in the claim which terminates this specification.

Figure 1 is an isometric view, partly in section, to illustrate the relation between the interior portions of the blower, and more particularly the blower section, the turbine section, and the diffuser section thereof.

Figure 2 is a detail isometric view, to an enlarged scale, illustrating particularly the relationship between the turbine section and the diffuser section.

Figure 3 is a section transversely to the blades in the blower section and in the diffuser section, respectively, and Figure 4 is a view similar to Figure 3 but illustrating the relationship between the blades in the turbine section and in the diffuser section, respectively.

Within a tubular outer housing generally indicated at **9**, a rotor **1** is rotatively mounted. The rotor and the housing are generally coaxial, with an appreciable space intervening between them all around. This space is in general for the passage of air intaken at the front end of the housing and moving therethrough to the rear end thereof, where it is directed to such places as it is to be used for cooling, or for any other suitable purpose. In the drawings, Figure 1, the end **90** of the housing **9** may be assumed to be the front end, and the end **91** to be the rear end. These terms are used purely for purposes of convenience of reference, and because, in a moving vehicular installation the end **90** would be directed forwardly.

Radiating from and spaced angularly about the rotor **1** are blower blades **2**. These are so shaped that as they rotate they will draw in air and advance it rearwardly, or toward the end **91** of the housing. The precise shape need not be described in detail, as this is a matter within the capability of an engineer, given the rotative speed and volume desired, and other detail requirements or conditions. These blades, then, constitute a blower section, and for a purpose which will shortly be made clear, a cylindrical shroud **20** encircles the outer ends of the blower blades **2** and rotates close to the inside of the housing **9**.

Also carried by and rotative with the rotor **1** are a series of short, angularly spaced, turbine blades **3**. These are so arranged with relation to an annular duct **92** for high compression air, and with respect to the nozzles **93** whence air is discharged from the duct **92**, that the nozzles, being located forwardly of, and discharging rearwardly towards and tangentially of the blades **3**, the latter will be caused to rotate, and thus will effect rotation of the rotor **1**. Furthermore, the shape of the turbine blades **3** is such (as determined by engineering design) that the air after passing through the turbine section thus constituted, and after imparting rotary movement to the turbine, will exit in a generally rearward direction.

It will be clear that the turbine section should be shrouded from the blower section until after the work has been extracted from the high compression air, and it is for this purpose that the cylindrical shroud **20** is provided. Also, while the turbine section might be at the root or inner end of the blower section, close to the rotor **1**, it is preferably at the outer end thereof, whereby the jet effect of the compressed air issuing from the nozzles is employed to best advantage and gives maximum peripheral velocity. Accordingly the duct **92** is preferably located just within the housing **9** and outside the shroud **20**, or is carried by or formed as a part of the housing, and the turbine section is located surrounding the blower section immediately behind the duct **92** and generally at the rear edges of the blades **2** of the blower section. The annular duct **92** is provided with a connection at **95** for connection, as by a tube **96**, to a convenient source of air under high compression. As has been indicated above, in a gas tur-

bine engine this would normally be bled from the compressor section of the gas turbine engine.

The air issuing from the turbine section will be highly turbulent, although it will have lost much of its velocity and will have gained in volume. The air in greater volume issuing from the blower section will be of less velocity, and may also have a degree of inherent turbulence, or will be disturbed by the difference of velocity as between the two air masses, such as may be undesirable. Accordingly, diffuser means such as the angularly spaced, radial blades **4** are preferably employed, located immediately to the rear of the blower section and of the turbine section, so that the air issuing from both those sections is received, commingled and smoothed out by the diffuser blades **4** in the diffuser section. The shape and curvature of the diffuser blades **4** will be determined in accordance with good design practice, with proper relationship to the volume, direction, and other factors of the air flow issuing from the turbine and blower sections, respectively, as to both of which the diffuser section is common. The diffuser blades may be supported directly from, and in any event will be fixed with relation to, the housing **9**, and may in turn support a fixed shell **40** to the rear of the rotor **1**, which shell is provided with a forwardly projecting bearing hub **41**, within which the rotor shaft **10** is rotatively mounted.

It is believed that it will be clear that air intaken at the left or front of the housing **9** is drawn in by the blower blades **2**, and is directed axially to the right or rearwardly through the housing. The blower is rotated by the discharge of highly compressed air jets from the nozzles **93**, directed tangentially against the turbine blades **3**. After passing from the turbine section this air is directed rearwardly or to the right, and, now considerably reduced in temperature and increased in volume, but of velocity much lower than its original velocity, mingles with the greater volume of even more slowly moving air drawn in by the blower, and since both are moving in the same direction the air flow through the housing is easily and quickly

smoothed out, assisted by the diffuser blades, and passes on rearwardly for use as required.

We claim as our invention:

An axial-flow blower for delivering cooling air in large volume, comprising a generally cylindrical rotor and a fixed coaxial housing spaced thereabout, open at its front end for intake of air and at its rear end for discharge of air, a generally cylindrical fixed shell located within the housing as a smooth rearward continuation of said rotor, a series of angularly distributed diffuser blades connecting the housing and the interior shell and supporting the latter, journal means for the rotor carried by said shell, a coaxial annular shroud located intermediate the rotor and the housing and terminating at its rear end immediately in advance of the outer ends of said diffuser blades, a series of blower blades distributed about the space between the rotor and the shroud, and mounted upon the rotor terminating immediately in advance of the diffuser blades, a series of turbine blades distributed about the rear edge of said shroud, intermediate the shroud and the housing and immediately ahead of the diffuser blades, an annular high compression air duct formed in the housing and having an inlet for connection to a source of highly compressed air, and a series of angularly spaced rearwardly directed nozzles formed in said housing and located forwardly of said turbine blades, for discharge of air from said air duct rearwardly against the turbine blades and then immediately past said diffuser blades, to mingle with air discharged rearwardly through the diffuser blades from the blower blades.

References Cited in the file of this patent

UNITED STATES PATENTS

941,834 Wing ---------- Nov. 30, 1909

FOREIGN PATENTS

197,914 Great Britain ---------- Nov. 1, 1923