Jan. 2, 1934. R. M. ZIMBER ET AL 1,942,042

DEVICE FOR SEALING MACHINES

Filed Sept. 20, 1929

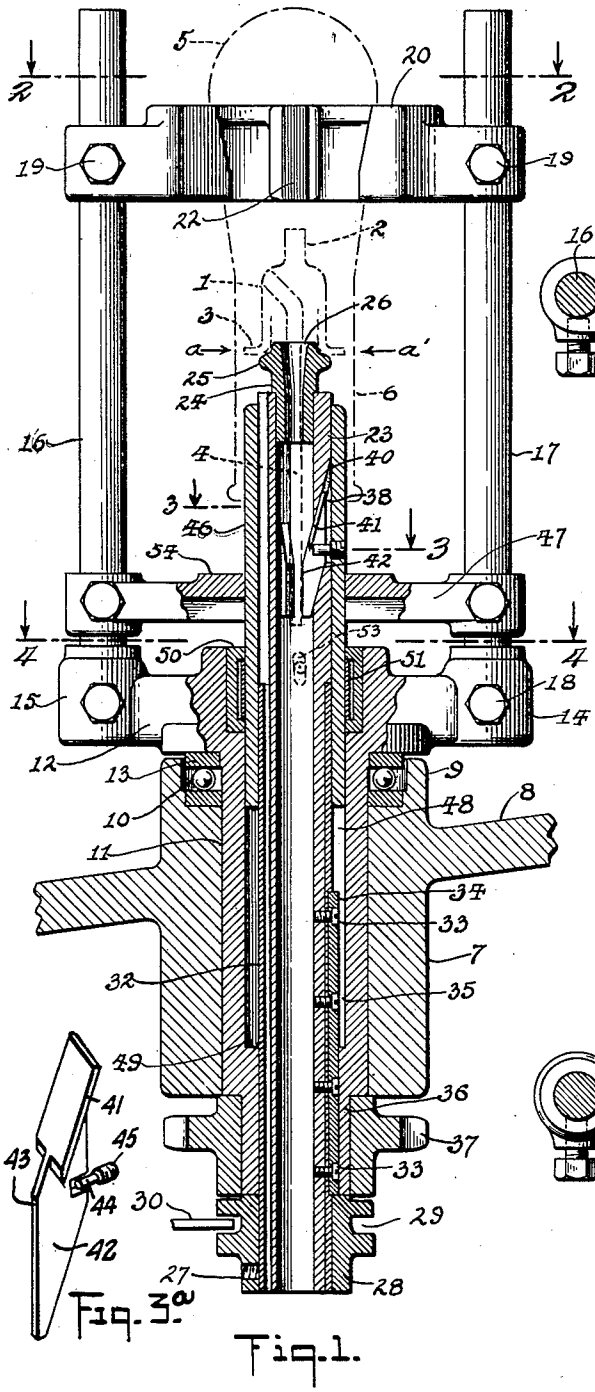

Fig. 1.

Fig. 3a.

Fig. 2.

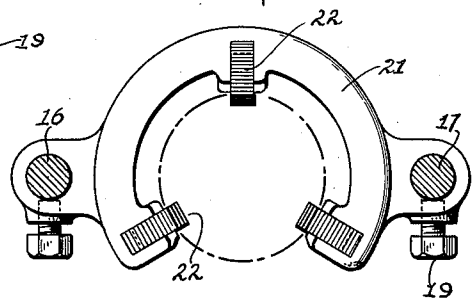

Fig. 3.

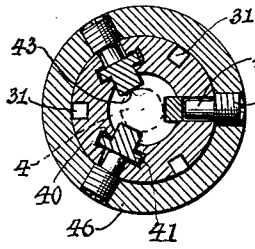

Fig. 5.

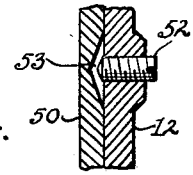

Fig. 4.

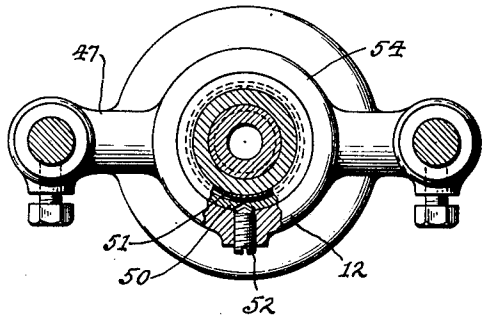

RAYMOND M. ZIMBER
LOUIS A. HAWTHORNE
INVENTORS

BY Darby & Darby
ATTORNEYS

Patented Jan. 2, 1934 1,942,042

UNITED STATES PATENT OFFICE

1,942,042

DEVICE FOR SEALING MACHINES

Raymond M. Zimber, Bloomfield, and Louis A. Hawthorne, Newark, N. J., assignors to Deforest Radio Company, Jersey City, N. J., a corporation of Delaware

Application September 20, 1929
Serial No. 393,936

24 Claims. (Cl. 49—2)

This invention relates to the art of sealing and with particularity to methods and means for uniting the parts of a lamp, audion, or similar device.

The principal object of the invention is to provide means for supporting the parts of a lamp, audion, etc. during the fusing or sealing operation.

In machines for uniting the so-called stem portion of a lamp or audion to the main or envelope portion thereof it is necessary accurately to maintain the said portions in contact and proper relative positions during the sealing operation. This is of pronounced importance when the several portions to be sealed are also rotated during sealing.

Accordingly it is another object of the invention to provide an improved holder for lamps, audions or other devices to be sealed.

A feature of the invention relates to a device for holding the envelope and stem portions of a lamp together with means for accurately centering the same with relation to the envelope.

Another feature relates to a device for gripping and holding a part of a lamp to be sealed, which device is capable of reciprocating motion and also rotary motion about its own axis.

In the usual type of lamp or audion the stem or mount portion is provided with a downwardly extending "exhaust" tube, and it is a feature of this invention to provide an improved mechanism for securely holding the stem or mount by gripping the "exhaust" tube.

A further feature of the invention resides in a novel type of slidable and rotatable rod provided with gripper members for gripping an "exhaust" tube, and accurately centering at any position for a sealing operation.

A further feature relates to a holder for a vacuum tube, stem or the like, said holder being capable of reciprocating motion and being on its interior provided with a novel gripping mechanism whereby the "exhaust" tube usually associated with the same is automatically gripped during the upward movement of the holder.

A still further feature relates to a holding rod for vacuum tube stems or the like, which is capable of reciprocating and rotary motion, and is provided with means for exerting a frictional drag on the parts of the lamp which have been sealed, which drag may be accurately regulated to remove strains in the portions of the lamp or audion which are sealed together.

A still further feature relates to the organization and arrangement of elements which go to make up an efficient accurate lamp holder suitable for use in lamp sealing machines or the like.

Other features and advantages not specifically enumerated will be revealed after a consideration of the following description and the appended claims.

While the invention will be disclosed hereinafter as applied to a machine for uniting or sealing the envelope portion to the stem portion of an audion, it will be understood that the invention is capable of application to any other class of object having parts which are required to the brought into proper relations for a sealing or fusing operation.

Accordingly Figure 1 of the drawing shows a view in elevation and partly in section of a holder according to the invention;

Fig. 2 is a top plan view of a portion of the device shown in Figure 1, taken along the line 2—2 of said figure;

Fig. 3 is a sectional view taken along the line 3—3 of Figure 1, showing the relation of the chuck jaws to the rod proper;

Fig. 3*a* is a detail view showing the structure of one of the grip jaws according to the invention;

Fig. 4 is a sectional view taken along the line 4—4 of Figure 1, showing the means for adjusting the pull on the sealed parts after they have been completely fused, and prior to hardening;

Fig. 5 is a perspective view showing the manner in which the "pull-down" effect on the seal is regulated.

Referring more particularly to Fig. 1, the numeral 1 represents the stem or mount portion of a lamp or audion. This stem comprises the usual press 2, flare 3, and exhaust tube 4. Numeral 5 represents the main or envelope portion of the lamp or audion which is to be sealed to the flare 3 around the periphery designated by the letters *a*, *a'*. The portion 6 of the envelope is usually known as the collet and is mechanically ejected after the flare 3 has been sealed to the envelope 5. Numeral 7 represents a hollow boss extending in opposite directions above and below the web member 8. Member 8 may take the form of a circular head of the type disclosed in copending application, Serial No. 392,136 filed September 12, 1929, which head is provided with a plurality of bosses 7 as described in said application. The upper end 9 of boss 7 is provided with an annular recess for retaining the ball bearing race 10. Extending through the opening in member 7 is the lamp holder according to the inven-

tion. This holder being made preferably in the form of a casting having a downwardly extending hollow cylindrical portion 11 and a horizontal circular portion 12. The portion 12 is provided with a bearing surface 13, and is supported in an anti-frictional manner for rotation on the ball bearings 10. The portion 12 of the holder carries two lateral extending lugs 14 and 15 in which are seated the rods 16, 17, said rods being rigidly held in the lugs 14 by means of suitably fastening bolts 18. Extending between the upper ends of the rods 16 and 17 and adjustably clamped thereto by means of the bolts 19 is a member 20 adapted to support the envelope or bulb portion 5 of the lamp. For this purpose the member 20 is provided with a C-shaped rib 21, said rib having attached thereto in any convenient manner, preferably at the points shown in Fig. 2, a set of heat insulating inserts 22. These inserts may be made of asbestos or similar material, and provide a fire-crack preventing support for the tapering portion of the bulb 5, as schematically represented in Fig. 1 of the drawing. By means of the screws 19 the member 20 may be adjusted to the proper height at which the envelope 5 is to be sealed to the flare 3 when the stem is moved to its extreme upward position, which is shown in Fig. 1.

The apparatus is shown in Fig. 1 with the stem 1 in its raised position, and such that the sealing fires or torch causes the envelope and flare 3 to be fused at the points *a*, *a'*.

For the purpose of supporting and centering the stem 1 with relation to the envelope portion 5 of the lamp, there is provided a hollow cylindrical rod 23. Fitted into the upper end of rod 23 is a perforated tip 24 which has a circular boss 25 adapted to engage the inner face of the flare 3. The tip 24 is also provided with a chamfered bore 26 for receiving the exhaust tube 4, and the wires passing through the press 2. On the lower end of rod 23 there is fastened, by means of a set screw 27, a collar 28 having an annular groove 29 on the outer face thereof. Adapted to engage the groove 29 in the manner described in application Serial No. 392,136, referred to hereinabove, is a member 30 by means of which the rod 23 may be raised and lowered at the proper time to permit loading and unloading of tubes within the holder. The wall of rod 23 is provided with three flutes 31 and extending around the periphery of rod 23 to enclose said flutes is a thin metallic sleeve 32. The purpose of the flutes in the rod 23 is to provide a path for the passage of air under pressure through the rod against the points where the envelope is sealed to the stem to separate or react from the inside against the action of the flame used in cutting off the collet portion 6. Attached to the sleeve 32 and also to the rod 23 by means of screws 33 is a key 34. This key fits into a corresponding groove 35 in the wall of the cylindrical portion 11. The portion 11 of the holder also has a reduced end portion 36 to which is securely fastened a sprocket 37 by means of which the holder proper, together with the rod 23 may be rotated as a unit. This rotation is preferably effected in the manner disclosed in application Serial No. 392,136 referred to hereinabove.

Rod 23 near its upper end is provided with three equi-distant slots 38 which in section are lozenge-shaped, and each slot having its side faces grooved as indicated by the numeral 40 of Fig. 3. Said grooves register with corresponding guiding edges 41 on the pointed chuck jaw 42. As shown more clearly in Fig. 1, the slots 38 all converge downwardly and towards the center of the rod 23, and the jaws 42 are slidable within the slots, and at all times the faces 43 of the chuck jaws are coaxial with the rod 23. Each of the jaws 42 is provided with a notch into which fits the end 44 of the chuck pins as shown in detail in Fig. 3. Pins 45 are preferably screw threaded on their outer end and secured in a sleeve 46. Sleeve 46 is slidably mounted on the rod 23 and passes through a corresponding opening in the cross member 47. Consequently the sleeve 46 is capable of independent sliding motion with respect to the rod 23. This independent motion, however, being limited by the movement of the jaws 42 within the associated slots 38. Sleeve 46 is also adapted to slide within a corresponding pocket portion 48 in the member 11, the downward motion of sleeve 46 being limited by the bottom 49 of said pocket. Surrounding the sleeve 46 and slidable thereon is a brake ring 50 which is annularly grooved on its inner surface to receive a spring ring 51, said spring closely fitting on the sleeve 46 and adapted to act as a brake or friction member between sleeve 46 and the ring 50. Ring 50 is seated in a corresponding pocket in the circular portion 12 of the holder proper. Ring 50 is capable of limited vertical motion with respect to the portion 12 by means of an adjustable set screw 52 which passes through the wall of the portion 12 and is adapted to register with a corresponding relatively elongated V-shaped depression in the outer face of ring 50, as represented by the numeral 53 in Fig. 5. The function of this limited relative movement between the brake ring and the holder proper will be described hereinafter.

In order to position a stem and envelope properly within the holder, the rod 23, together with sleeve 46 should be in their lowermost position (in Fig. 1 the said rod and sleeve are shown in their uppermost position). The manner in which the rod 23 is lowered to the charging position is described in detail in application Serial No. 392,136 referred to hereinabove. In the lowermost position the lower end of sleeve 46 is resting on the bottom 49 of the pocket 48 and the chuck jaws 42 are separated their maximum distance. A stem 1 is placed on the tip 24 with the exhaust tube 4 passing therethrough and downwardly past the chuck jaws 42. Next an envelope or bulb 5 is placed over the stem and resting on the inserts 22 as hereinabove described. By any suitable means, preferably such as disclosed in application Serial No. 392,136 referred to hereinabove, the member 30 engages the groove 29 and starts to raise the rod 23. Immediately that the rod 23 starts to move upwardly the sleeve 46 and ring 50 are supported by the pocket 49, and said ring and sleeve tend to remain stationary as the rod 23 moves upwardly. Consequently the chuck jaws 42 tend to move inwardly towards the center of rod 23. However this inward movement of the chuck jaws is limited by their engagement with the exhaust tube and consequently the gripping action on said stem tube is controlled by the weight of sleeve 46 and ring 50 during the upward movement of rod 23. Consequently the stem 1 is firmly gripped and accurately centered with respect to the bulb portion 5. As soon as the chuck jaws 42 "take-up" on the exhaust tube 4, the sleeve 46 and ring 50 move upwardly as a unit with the rod 23. However the upward movement of ring 50 is limited by the set screw 52 and the countersunk depression 53 as hereinabove described. Consequently

when said ring 50 stops moving upwardly an additional frictional drag is exerted on the sleeve 46 and consequently an added pressure is applied through the jaws 42 to the exhaust tube 4.

When the rod 23 has been thus raised to its uppermost position the sprocket 37 engages a suitable driving means by means of which the entire holder assembly is rotated and consequently the periphery of the envelope 5 is continuously presented to the sealing torch. At a suitable stage in the operation of the machine and after the flare 3 has been completely sealed to the envelope 5 the collet portion 6 is removed from the envelope proper in any suitable manner. However it is necessary while the union between the bulb 5 and the flare 3 is still plastic to draw down the stem 1 a short distance from the bulb 5 which is supported by member 21 as described. This additional stretch has been found necessary in order to prevent cracking of the seal due to shrinkage of the glass during cooling. This stretching effect on the seal is effected through the weight of the sleeve 46 and the ring 50 as the rod 23 is lowered and the amount of stretching is determined by the adjustment of screw 52. In other words so long as the sleeve 46 and rod 23 are moving downwardly as a unit the chuck jaws 42 firmly grip the exhaust tube 4 and pull downwardly on the same. However when the downward movement of the sleeve 50 is stopped a frictional drag is exerted on sleeve 46 and the chuck jaws open, permitting further downward movement of the rod 23 without exerting any pull on the exhaust tube 4.

As the rod 23 descends the jaws 42 recede until they abut against the inner face of sleeve 46, and the further downward movement of rod 23 will be effected by the mechanism against the friction of spring 51. The stem and bulb having now been completely sealed can be removed from the holder 21 and the collet portion 6 which is now resting upon the flat table portion 54 is ejected into a receptacle by any suitable mechanical means and the holder is in condition to be again loaded with another bulb and stem.

While specific apparatus and arrangements have been disclosed herein, it will be understood that various changes may be made without departing from the spirit and scope of the invention.

What is claimed is:

1. In a device of the character described, means for supporting and accurately centering the stem portion of a lamp or audion with respect to the envelope portion thereof and including a reciprocating hollow rod having a plurality of releasable gripping fingers on the interior thereof, said fingers being freely mounted for sliding movement in said rod while moving bodily with said rod, said sliding movement being effected only in an oblique direction with respect to the longitudinal axis of the rod.

2. In a device of the character described a hollow reciprocating rod having a set of shiftable members for gripping a portion of a lamp stem, said members being freely mounted in the wall of said rod for sliding movement therein while moving bodily therewith, said sliding movement beng effected only in an oblique direction with respect to the longitudinal axis of the rod.

3. In combination a lamp stem or mount having an exhaust tube attached thereto and means for supporting said stem during a sealing operation including a set of shiftable members on the interior of said rod adapted to grip the exhaust tube to accurately center the same during the sealing operation, said members being freely mounted in the wall of said rod for sliding movement therein while moving bodily therewith, said sliding movement being effected only in an oblique direction with respect to the longitudinal axis of the rod.

4. In a device of the character described, means for supporting a lamp stem having an exhaust tube attached thereto including a reciprocating hollow rod and a set of gripping jaws mounted for sliding movement only in the wall of said rod, and a sleeve surrounding said rod carrying means for supporting said jaws.

5. A device according to claim 4 in which said jaws are adapted to slide at an angle to the axis of said rod.

6. In a device of the character described, means for supporting a lamp stem including a hollow rod and a shiftable chuck on the interior of said rod, said chuck including a set of jaws mounted for sliding movement in the wall of said rod while moving bodily with said rod, and means for limiting the sliding movement of said jaws to an oblique direction relative to the longitudinal axis of the rod.

7. A device according to claim 6 in which said chuck includes a plurality of lozenge-shaped jaws having the gripping edges thereof parallel to the axis of said rod.

8. In a device of the character described, means for supporting and gripping a lamp stem comprising a reciprocating rod having a set of gripper members slidably mounted in the wall thereof, a sleeve surrounding said rod and having a plurality of projections for supporting each of said gripper members.

9. A device according to claim 8 in which said sleeve is slidably mounted on said rod, and means are provided for exerting a frictional drag on said sleeve.

10. In a device of the character described a rod having a plurality of gripper members slidably mounted in the wall thereof, a sleeve surrounding said rod and provided with projections engaging each of said gripper members, said sleeve being capable of movement on said rod, means for moving said rod and sleeve together, and friction means for retarding the motion of said sleeve relatively to said rod.

11. In a device of the character described, the combination of a hollow rod having a set of chuck jaws slidably mounted in the wall thereof, a weighted member supporting each of said chuck jaws and means for reciprocating said rod for causing said jaws to converge towards the center of said rod during one portion of the movement of said rod.

12. In combination a hollow rod, a set of chuck jaws slidably mounted in the wall of said rod, means for moving said rod to cause said jaws to converge towards the center thereof to grip an article therebetween, and means for providing a frictional retarding force between each of said jaws and said rod, said retarding means being effective when said rod has been moved a predetermined distance.

13. A reciprocating chuck comprising a hollow rod, a plurality of chuck jaws slidably mounted in the wall of said rod, and means for opening and closing said jaws including a sleeve surrounding said rod and mounted for independent sliding movement thereon, and means for exerting a frictional drag on said sleeve.

14. A reciprocating chuck comprising a hollow

rod having a plurality of chuck jaws slidably mounted in the wall thereof, and means for moving said jaws towards and away from the center of said rod, including a sleeve surrounding said rod engaging each of said jaws, a friction device on said sleeve, and means for moving said rod, said sleeve and said friction device as a unit through a predetermined distance, and then stopping further movement of said friction device without stopping the movement of said rod and sleeve.

15. In combination a chuck rod, a sleeve surrounding said rod, and operatively connected to each of the chuck jaws, a friction member attached to said sleeve, means for rendering said friction member effective upon said sleeve at a predetermined point in the reciprocating movement of said rod and sleeve.

16. A reciprocating chuck comprising a hollow rod having a set of chuck jaws slidably mounted in the wall thereof, a member surrounding said rod and supporting each of said chuck jaws, means for moving said rod and said member as a unit, and means effective at a selected point in the movement of said rod for stopping the movement of said member and said chuck jaws without stopping the movement of said rod, whereby said jaws are caused to open.

17. Means for supporting and gripping a lamp stem comprising a hollow rod having a plurality of gripper members on the interior thereof gripping an exhaust tube attached to said stem, a sleeve surrounding said rod and supporting said gripper members, and a friction device for said sleeve for retarding the movement of said sleeve relatively to said rod.

18. A chuck construction comprising a hollow-rod, a plurality of chuck jaws, slidably mounted in said rod, each jaw having a slot on one face thereof, a sleeve around said rod and slidable therein, a plurality of pins carried by said sleeve and each engaging a chuck jaw, means for moving said rod and sleeve as a unit and means for frictionally retarding the movement of said sleeve to cause said jaws to converge toward the center of said rod.

19. In combination a holder for the envelope and stem of a lamp to be sealed comprising a member in which said holder is mounted for rotary and vertical motions, means in said holder for gripping an exhaust tube, means for raising said gripping means to bring the stem into engagement with the envelope, means effective after a predetermined movement of said gripping means for increasing the grip thereof on said tube, means for lowering said gripping means for a predetermined distance without releasing said exhaust tube, and means effective after said predetermined distance for releasing said exhaust tube and allowing said gripping means to be lowered freely.

20. In combination a hollow rod having shiftable gripper members on the interior thereof, a lamp stem having an exhaust tube passing through said rod, means for raising said rod to cause said members to grip said exhaust tube and hold said stem in central position, means effective after a predetermined movement of said gripping means for increasing the grip thereof of said tube, means effective when the sealing is completed for lowering said rod and exerting a "pull-down" on the seal to remove strains therefrom, and means for limiting the amount of said pull down.

21. The combination according to claim 20 in which the means for adjusting the amount of "pull-down" includes a friction member adapted to move downwardly with said rod, and means for limiting the downward movement of said friction member without stopping downward movement of said rod.

22. In a sealing machine means for holding a lamp-stem including a hollow rod having a plurality of chuck jaws slidably mounted therein, a plurality of flutes on the outer surface of said rod, a sleeve surrounding said rod throughout a part of its length to enclose said flutes and to support said jaws, another sleeve surrounding said rod and cooperating with said chuck jaws to cause them to be opened and closed.

23. A sealing machine according to claim 22 in which said other sleeve is provided with a frictional retarding means.

24. In a machine of the character described a hollow rod, a set of chuck jaws mounted for sliding movement through the walls of said rod, means for moving said rod longitudinally in an initial movement to cause said jaws to grip a lamp stem, and friction means effective during the final movement of said rod for increasing the gripping action of said jaws.

RAYMOND M. ZIMBER.
LOUIS A. HAWTHORNE.