MINING MACHINE AND METHOD

Filed Aug. 28, 1967 4 Sheets-Sheet 1

FIG. 1.

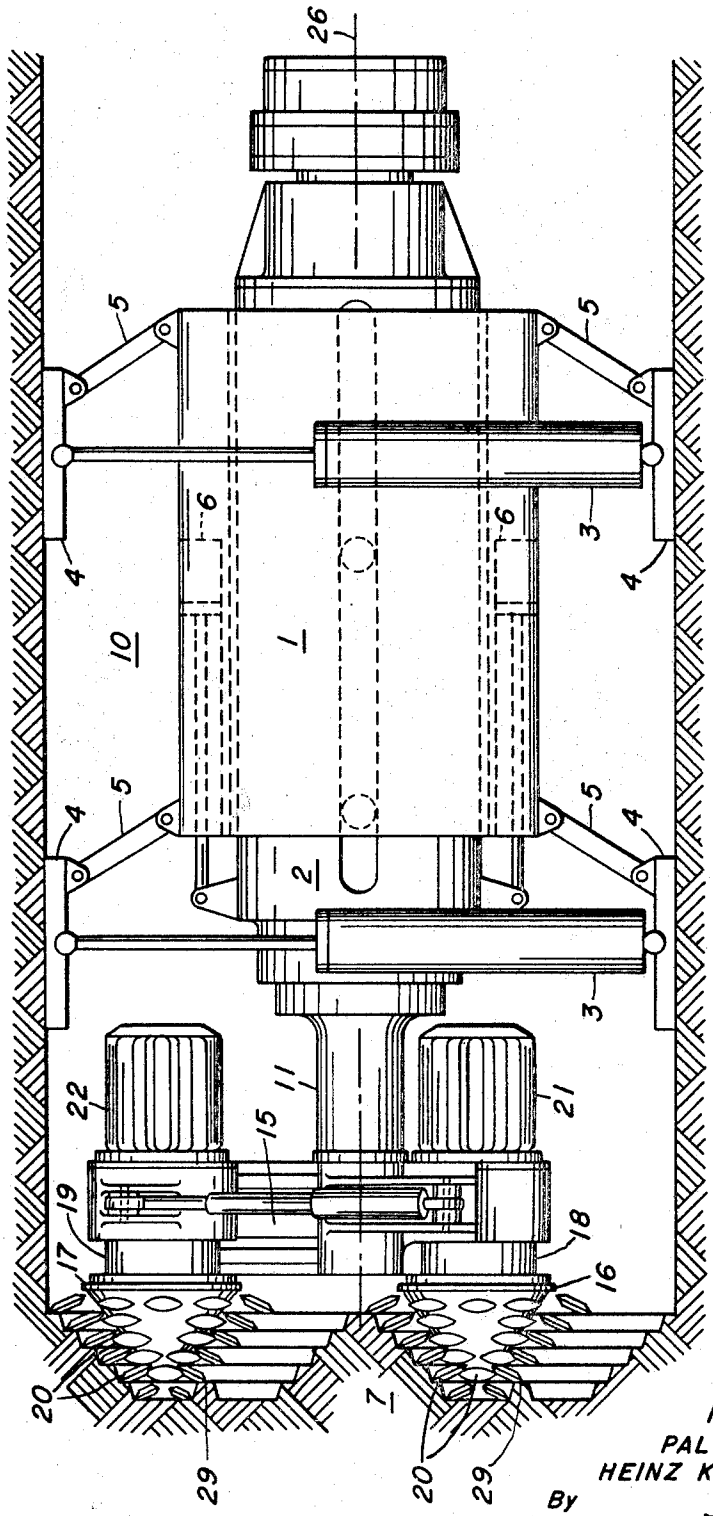

INVENTORS.
PAL FRENYO &
HEINZ KLÖTTSCHEN
By Murray & Linkhauer
Attorneys

MINING MACHINE AND METHOD

Filed Aug. 28, 1967 4 Sheets-Sheet 2

FIG. 5.

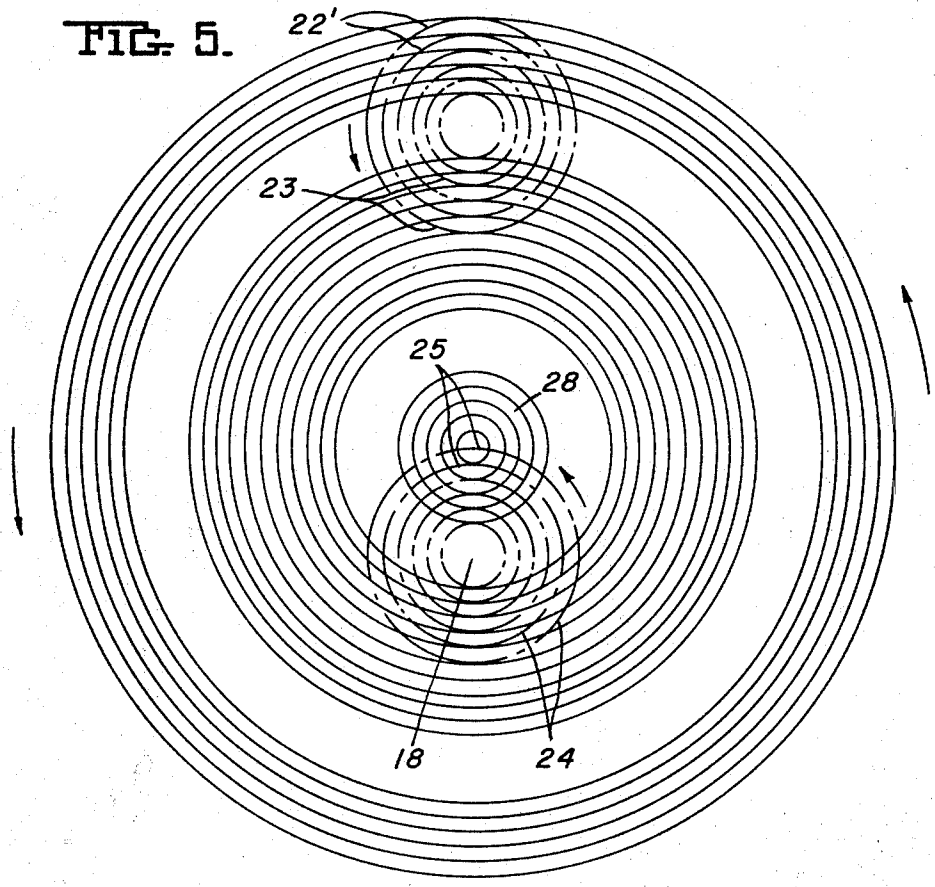

FIG. 2.

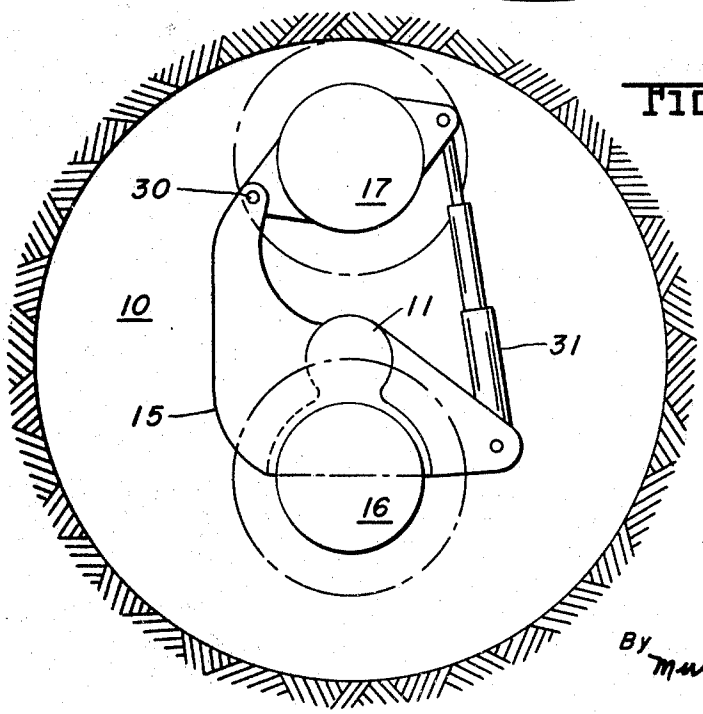

INVENTORS.
PAL FRENYO &
HEINZ KLÖTTSCHEN
By Murray & Linkhauer
Attorneys

MINING MACHINE AND METHOD

Filed Aug. 28, 1967 4 Sheets-Sheet 3

FIG. 3.

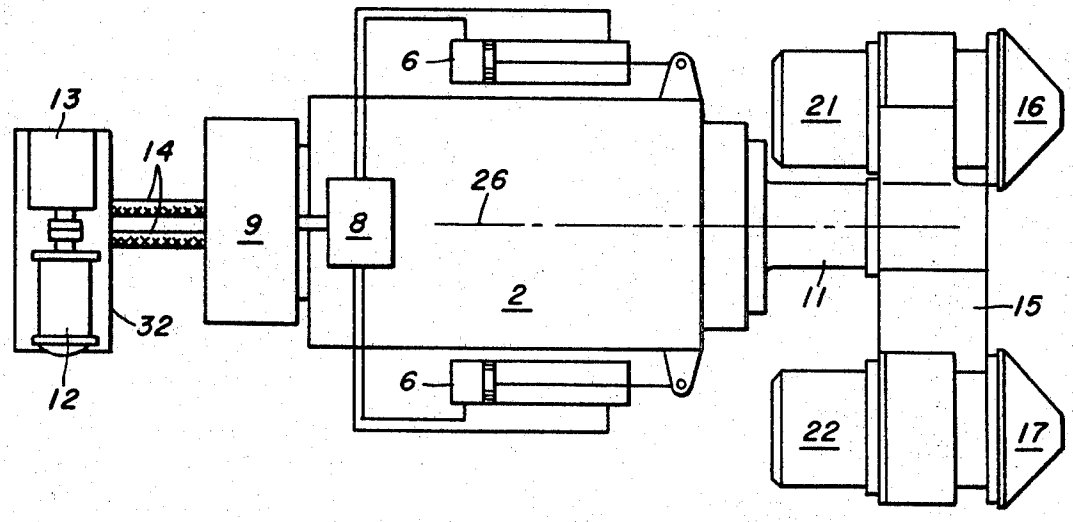

FIG. 6.

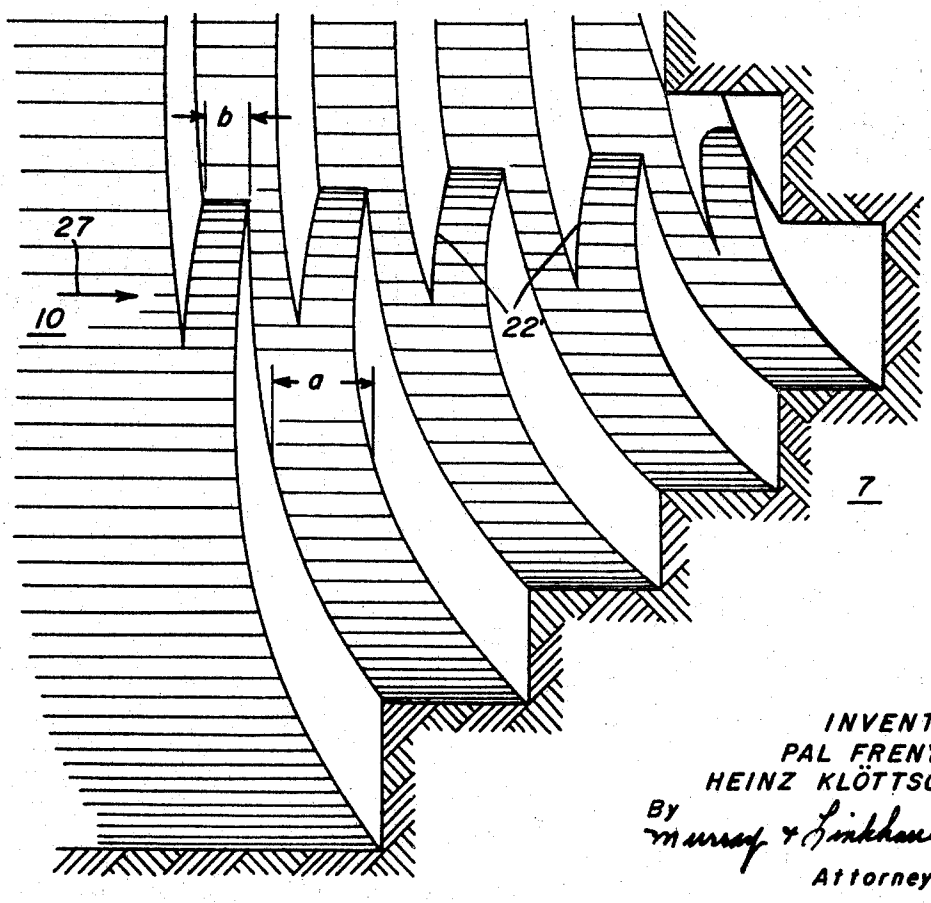

INVENTORS.
PAL FRENYO &
HEINZ KLÖTTSCHEN
By Murray & Linkhauer
Attorneys

MINING MACHINE AND METHOD

Filed Aug. 28, 1967 4 Sheets-Sheet 4

FIG. 4.

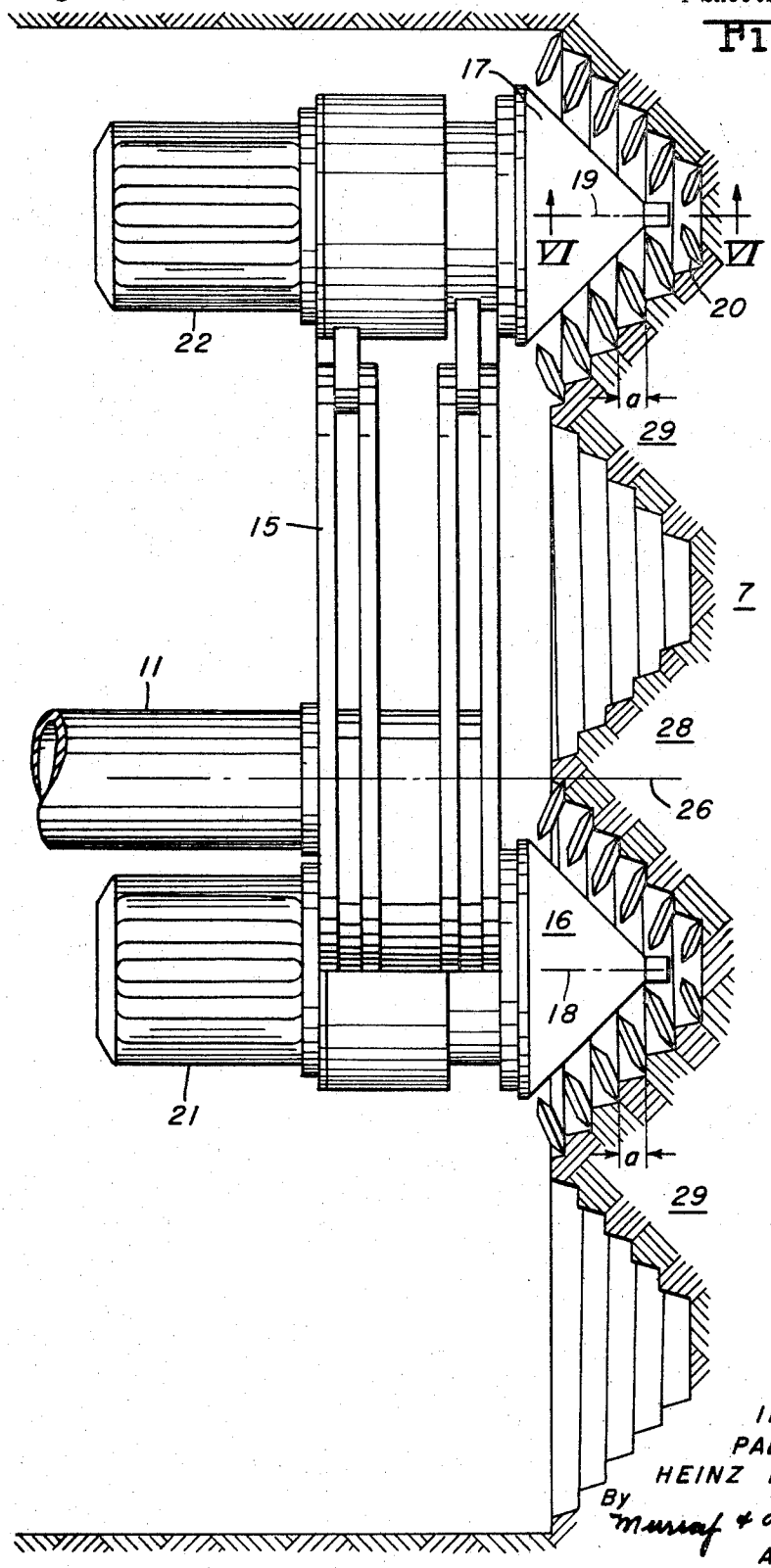

INVENTORS.
PAL FRENYO &
HEINZ KLÖTTSCHEN
By Murray & Linkhauer
Attorneys

United States Patent Office

3,477,762

Patented Nov. 11, 1969

1

3,477,762
MINING MACHINE AND METHOD

Pal Frenyo and Heinz Klöttschen, Bochum, Germany, assignors to Gebr. Eickhoff Maschinenfabrik und Eisengiesserei m.b.H., Bochum, Germany, a corporation of Germany

Filed Aug. 28, 1967, Ser. No. 663,713
Int. Cl. E01g *3/04;* T21c *25/06, 29/02*
U.S. Cl. 299—10 4 Claims

ABSTRACT OF THE DISCLOSURE

This patent discloses a mining machine, and method of using it, for heading into hard rock or mineral. Satisfactory cutting of hard rock, with a minimum of pressure on the tool, is obtained by providing a mining machine of the kind with a frame, a tool carrier pivoted on the longitudinal axis of the passage to be cut, and a plurality of rings of cutter or roller bits mounted on the tool carrier, each at a different radial distance from the longitudinal axis of the passage and each pivoted about an axis inclined toward the axis. According to the invention, each ring has its bits spaced at a common distance, so as to cut a number of steps of equal height into the rock or mineral. This patent further discloses a method of operating such a machine, according to which the bit rings are rotated more rapidly than the tool carrier, and the tool carrier is advanced toward the face being cut at a rate sufficiently low that in a single complete rotation the cutter or roller bits on a bit ring cut away only a part of the step of coal with which they come into contact.

BACKGROUND OF THE INVENTION

Field of the invention

This invention relates to mining machines and methods of using same.

Description of the prior art

It is known to provide a mining machine equipped with a cutter drum in the shape of a truncated cone at the front end of the machine, where the small front face and shell of the truncated cone are fitted with cutter bits. In a machine of this type, the cutter drum is carried by an arm pivoted on the machine frame, so that it can be swiveled in all directions; the arm is at right angles to the end face so that it will guide the cutter drum over the roadway cross section which is to be cut away.

Also known are mining machines that consist of a frame which can be moved to the longitudinal direction of the gallery or roadway, the frame being equipped with a tool carrier facing the mineral to be cut, this tool carrier being pivoted on the longitudinal center line of the gallery to be made. In known machines of this kind, two or more rings of bits, which may be cutter bits or roller bits, are arranged outside the longitudinal center line of the gallery to be made and are pivoted at different radial distances from the longitudinal center line of the tool carrier, so that the bit center lines are inclined toward the gallery center line. These bit rings detach the mineral by means of roller or cutter bits arranged at the front of the cutting tool, by cutting radially into the hard rock or mineral. Known machines of this kind have not, however, been so constructed as to exhibit certain features invented by the applicants and hereinbelow described, and as a result, though such machines prove adequate for mining minerals of low or medium hardness, they exhibit the disadvantages of requiring substantial forward pressure and having as a result rather short tool life when

2

they are used for the mining of relatively harder rock or minerals.

SUMMARY OF THE INVENTION

In accordance with the present invention, the above-mentioned disadvantages are overcome by providing a mining machine that is substantially similar to that described above, except that there are provided on the exteriors or shells of the cone-shaped cutter drums a number of cutter or roller bits, so spaced and arranged as to leave in the face of the coal being cut a number of steps of equal height. This makes it relatively easier to dislodge the hard rock or mineral with which the roller or cutter bits are coming into contact, as the bits are coming into contact with pieces of hard rock or mineral that are not part of a flat face, as would be the case, for example, with cutter or roller bits arranged only on the end, rather than the exterior, of a cutter drum of generally frustoconical shape. The favorable effect is maximized and enhanced by using a number of steps of equal height. The present invention further concerns a method of operating a mining machine having the feature indicated above, in accordance with which the cutter drums are advanced into the hard rock or mineral at a relatively low rate of speed, e.g., so that of the height of the step with which an individual cutter or roller bit comes into contact in a particular pass of the cutter or roller bit into the hard rock or mineral comprising that step, only a relatively small part, for example, the outermost one-third of the step, lies within the volume swept through by the cutter or roller bit. This is conveniently done by providing hydraulic means for advancing the tool carrier carrier away from the frame and into the hard rock or mineral to be cut, and providing means driven by said hydraulic means for rotating the tool carrier, so that the tool carrier rotates at a relatively low rate of speed. The cutter drums, on the other hand, are rotated by electrical motors separately provided, and they travel at a much higher rotational speed, as is required in order that their cutter or roller bits strike the hard rock or mineral with sufficient energy to dislodge it. To allow for accelerating or decelerating the mining operation, in accordance with the hardness of the mineral currently being encountered, it is preferred to provide an infinitely variable power linkage or transmission, for example, one of hydraulic nature, between the means for driving the tool carrier forward off the frame and into the face and the means for causing the tool carrier to rotate about its axis.

It is essential, to a proper understanding of this invention, to distinguish between what the tool carrier is doing and what the cutter drums are doing. Over a period of time, such as one minute, the tool carrier will have made one revolution, carrying it about one-third of the height of the step deeper into the face of hard rock or mineral so as to leave, as a result of the many rotations that the cutter drum will have made in that time, a stepped groove, one for each frustoconical cutter drum used. In a particular individual revolution of a cutter drum, only a relatively small amount of hard rock or mineral is encountered and dislodged, namely, that with which the roller or cutter bits on the cutter drum will now be brought into contact with, as a result of the relatively slight rotation of the tool carrier that has taken place during a single revolution of the cutter drum. This means that a bit on the exterior of the cutter drum rotates freely without encountering any hard rock or mineral under it reaches a point, in its circumference of travel at which it begins to encounter a small volume of coal, namely, a volume about one-third the height of an individual step (more or less, depending upon the rate of advance of the tool carrier forward into the hard rock

or mineral, compared with the height of individual step, as determined by the spacing of the roller bits on the frustoconical drum upon which they are mounted) and extending for a distance about the periphery of the step cut by the machine in one rotation of the tool carrier (this distance being more or less, depending upon the rotational speed of the tool carrier and the rotational speed at which the electrical motors drive the frustoconical cutter drum, higher cutter-drum rotational speeds or lower tool-holder rotational speeds making the volume to be cut smaller). It will be appreciated that by using a tool holder having mounted thereon a number of cutter drums spaced at different radial distances from the longitudinal center line of the passage to be cut, it will be possible to cut into hard rock or mineral a passage of large diameter, leaving neither ribs nor a core, and at the same time, as a result of the considerations explained above, the forward pressure on the tool carrier to drive the machine will be minimized and the tool life will be improved.

BRIEF DESCRIPTION OF THE DRAWINGS

A complete understanding of the invention may be obtained from the foregoing and following description, taken together with the accompanying drawings, in which:

FIGURE 1 is a side view of a mining machine in accordance with the present invention;

FIG. 2 is a front view of the mining machine of FIG. 1;

FIG. 3 is a diagrammatic plan view of the mining machine of FIG. 1;

FIG. 4 is an illustration to a different scale, illustrating the operation of the machine of FIGS. 1–3;

FIG. 5 is an illustration of the end face cut by the use of the machine of FIGS. 1–3; and

FIG. 6 is a perspective part view of the end face of FIG. 5, taken on the line VI—VI of FIG. 4.

DESCRIPTION OF THE PREFERRED EMBODIMENT

Referring to FIG. 1, there is shown a tube-shaped frame **1** and a machine casing **2** longitudinally displaceable inside the frame **1**, as well as hydraulic cylinders **3** arranged in pairs on different sides of the machine, which are connected to the frame **1** and rest with their shoes **4** shaped to suit the roadway curvature on the roadway floor and roof and thereby clamp the frame **1** in position, holding it centrally located with respect to the roadway center line, with the aid of guide links **5**. Hydraulic cylinders **6** serve to displace the machine casing **2** toward an end face **7**. The cylinders **6** are put under pressure by hydraulic pump **8**, which is driven by a hydraulic motor **9**, best seen in FIG. 3. Since this hydraulic motor **9** drives also the main shaft **11**, which is located in the longitudinal center line **26** of the roadway **10**, the rotary motion of the main shaft **11** and the feed motion of the two hydraulic cylinders **6** are at a definite ratio, but this ratio may be infinitely varied by adjusting the pump **8**, and the feed motion can thus be brought up to the required order of magnitude. The energy required to drive the hydraulic motor **9** is supplied through hoses **14** by a hydraulic pump **13**, which is driven by an electrical motor **12** and arranged at some distance behind the mining machine in the roadway **10** on an oil tank **32**, the tank **32** and motor **9** being capable of traveling together in the longitudinal direction of the roadway **10**.

On the front free end of the main shaft **11**, there is arranged, as shown in FIGS. 1 and 4, a tool carrier **15** carrying two bit rings **16** and **17**. The bit rings **16** and **17** are arranged on the tool carrier **15** at different radial distances from the main shaft **11**, and they rotate about axes **18** and **19** which are inclined with respect to the main shaft **11**. The difference in the direction of the axes **18** and **19** with respect to the main shaft **11** corresponds to the clearance angle of the roller bits **20** arranged on the bit rings **16** and **17**; to show this angular relation

graphically would have required complicated drawings, and for the sake of simplification, a parallel relation is shown in the accompanying drawings. The bit rings **16** and **17** are each made in the shape of a frustrum of a cone, and they carry roller bits **20**, both on their small front face within the roadway end face **7** and on their shell surfaces, the roller bits **20** on the shell surfaces of the bit rings **16** and **17** having common spacings of lines of cut, so as to produce, as shown in FIG. 6, a stepped groove, with each of the steps having a distance, proceeding in a direction perpendicularly into the end face **7**, of *a*. In order to reduce the shock upon running into the rock and to improve the quiet running of the mining machine, the roller bits **20** can be arranged helically on the shell surface of the bit rings **16** and **17**. The bit ring **16** is driven by an electrical motor **21** and the bit ring **17** is driven by an electrical motor **22**. The bit rings **16** and **17** rotate together with the tool carrier **15** and the main shaft **11** slowly about the longitudinal center line of the roadway **10**.

On account of the arrangement of the bit rings **16** and **17** in the form of a truncated cone, with an inclination of 45°, the roller bits **20** that are arranged with a common distance *a* of their lines of cut on the shell surface will make a cut in the roadway end face which corresponds to the profile of the bit ring, the sides of the cut or groove being stepped. This cut is widened annularly by the rotation of the tool carrier **15**, and the cut is taken over the entire roadway cross section, so that neither core nor ribs are left. By the uniform advance of the machine frame **2** in the longitudinal direction of the roadway, which is effected by means of the two hydraulic cylinders **6**, the epicycloidal or hypocycloidal path of motion of the roller bits **20** is pushed helically deeper into the roadway end face **7**.

FIGS. 5 and 6 show that the roller bits **20** perform during the rotation about axes **18** and **19** of the bit rings **16** and **17**, cuts whose lengths correspond to arcs **22'** and **23** or **24** and **25**. They come into contact with the rock only over this comparatively short distance and then detach a cross section of mineral from its surroundings, the amount detached being governed by the speed of the advance of the mining machine along the roadway center line and the speed of rotation of the tool carrier **15**, as is clearly shown in FIG. 6. The individual roller bits **20** penetrate quickly and consecutively into the mineral, which projects in steps and is therefore less securely held, and thus the bits **20** have adequate time for cooling down, so that they have a long service life. The lead of the helical path along which the bit rings **16** and **17** move during their rotary motion about the roadway center line **26** is governed by the selected speed of advance, which, in turn, is controlled by the volume of liquid supplied by the hydraulic pump **8**. In the example of an embodiment shown in FIG. 6, the advance of the machine in the direction of the roadway center line, i.e., in the direction of the arrow **27**, per revolution of tool carrier **15** is equal to *b*. The mining machine does not operate here with a maximum speed of advance corresponding to the distance *a* of the lines of cut, that is to say, to the depth of the steps, but rather it detaches by means of the roller bit **20** only the amount of rock or mineral governed by the depth *b* of the chip and the rotary motion of the tool carrier **15** along the length of the arc **22'**, as seen in FIG. 5.

The bit ring **16**, which detaches the central part of the roadway end face **7** and cuts it free, extending up to the center line **26** of the roadway **10**, runs around a core **28** that is formed at the center line **26** and thereby crushes it, so that no core is left in the portion of the passageway **10** upon which the machine has operated. As also seen in FIG. 4, there is an annular rib **29** of rock, which projects between the two bit rings **16** and **17** but is, nevertheless, equally worked upon and dislodged by the action of both bit rings **16** and **17**. If the bit rings **16** and **17** are so ar-

ranged that they are adjustable with respect to each other in the direction of the center line **26**, and if the bit ring **16** is made to advance with respect to the outer bit ring **17**, the planes of motion of the two bit rings **16** and **17** can be adjusted with respect to each other in such a way that the rib **29** of rock is detached entirely by the inner bit ring **16** if the roadway cross section to be cut is such that it can be cut with overlapping bit rings. In this way, the volume of rock to be dislodged is uniformly distributed over both bit rings, so that they are uniformly loaded.

If the direction of rotation of the outer bit ring **17** is made to coincide with the direction of rotation of the tool carrier **15**, the mining machine runs particularly quietly, without shocks, because of the comparatively small angle at which the roller bits **20** run into the rock or mineral. That is to say, these advantages are obtained when the outer bit ring **17** rotates in the same sense as the tool carrier **15**.

As shown in FIG. 2, the outer bit ring **17** is pivoted on the center line **30** of the tool carrier **15** and is made radially adjustable in its given working position by means of a double-acting hydraulic jack **31**. If the jack **31** is acted upon by hydraulic fluid at a rhythm or in a cycle that is governed by the rotary motion of the tool carrier **15**, it is possible to make roadway cross sections that, rather than being round, are of one or another desired different shape.

While we have shown and described herein certain embodiments of our invention, we intend to cover as well any change or modification therein which may be made without departing from the spirit and scope of the invention.

We claim as our invention:

1. In a machine for mining hard rock or mineral comprising a frame, a tool carried mounted on said frame for pivotal movement about the center line of a passage to be cut by said machine and for movement into a face of said rock or mineral to cut said passage, and a bit ring mounted on said tool carrier for rotation about an axis not coincident with said passage center line, said bit ring having thereon a plurality of bits, the improvement which consists in having said bit ring shaped as a truncated cone and having said bits so spaced and arranged on the exterior of said cone as to cut into said hard rock or mineral a plurality of steps of equal height, by the exertion of forces directed radially outwardly from said axis and

operating upon the hard rock or mineral of one of said steps at a point intermediate of its extent in a direction parallel to said center line.

2. An improvement as defined in claim **1**, characterized in that said mining machine further comprises means operable while the mining machine is in operation for adjusting the distance between the center line of an exterior one of said bit rings and the center line of the passage to be cut, whereby roadway passages of different shape may be cut.

3. An improvement as defined in claim **1**, further characterized in that said machine comprises infinitely variable transmission means for turning said tool carrier about its axis at different rates of speed with respect to the speed of advance of said tool carrier away from said frame.

4. A method of cutting underground passages in hard rock or mineral comprising dislodging said mineral from a face thereof by cutting therein a stepped groove having steps of equal height, said cutting being done by successively bringing into contact with various portions of the periphery of said stepped groove a rotating member substantially smaller than the outside diameter of said annular stepped groove, said method being characterized by the step of moving said rotating member perpendicularly into said face of hard rock or mineral at a rate of speed such that a significant portion but less than the entire extent of an individual step of said stepped groove is cut during one rotation of said rotating member by means of forces directed radially with respect to the axis of rotation of said rotating member.

References Cited

UNITED STATES PATENTS

2,466,709	4/1949	Karr	299—86 X
3,004,753	10/1961	Sik	299—60
3,215,214	11/1965	Caro	299—86 X
3,285,355	11/1966	Neilson et al.	175—334
3,288,532	11/1966	Carver	299—86 X
3,387,893	6/1968	Hoever	299—86 X

ERNEST R. PURSER, Primary Examiner

U.S. Cl. X.R.

299—60, 86, 31; 175—62, 338