Aug. 21, 1923. 1,465,355

E. G. EBERHARDT

COMBINATION ELECTRIC HEATER

Filed July 22, 1922 2 Sheets-Sheet 1

FIGURE 1.

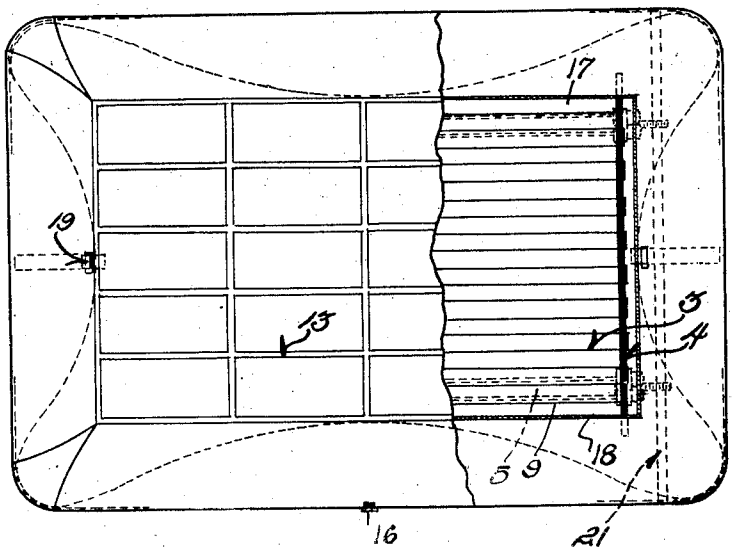

FIGURE 2.

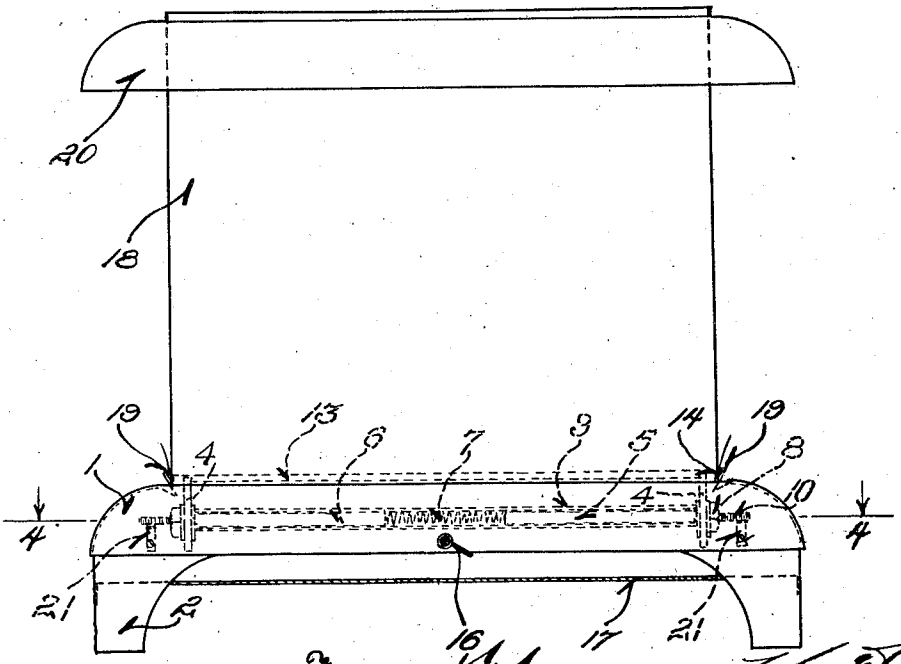

Inventor:
Emanuel G. Eberhardt
by Young & Young
Attorneys

Aug. 21, 1923. 1,465,355

E. G. EBERHARDT

COMBINATION ELECTRIC HEATER

Filed July 22, 1922 2 Sheets-Sheet 2

FIGURE 4.

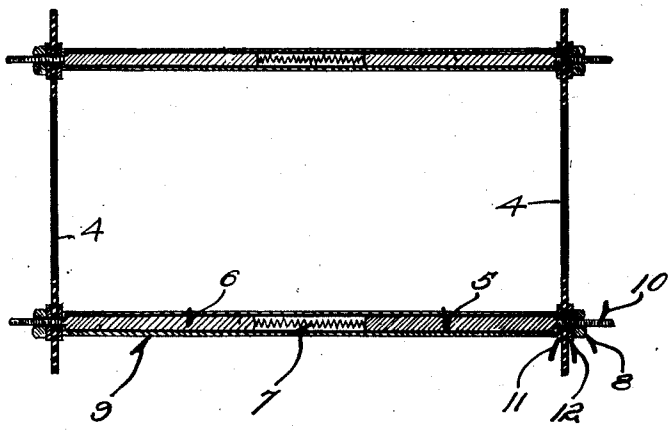

FIGURE 3.

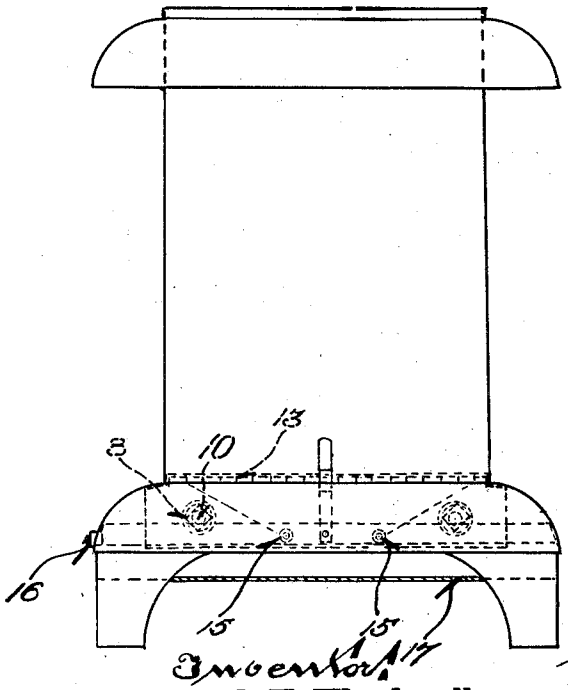

Inventor,
Emanuel G. Eberhardt

By Young & Young
Attorneys

Patented Aug. 21, 1923. 1,465,355

UNITED STATES PATENT OFFICE.

EMANUEL G. EBERHARDT, OF RACINE, WISCONSIN.

COMBINATION ELECTRIC HEATER.

Application filed July 22, 1922. Serial No. 576,840.

To all whom it may concern:

Be it known that I, EMANUEL G. EBERHARDT, a citizen of the United States, and resident of Racine, in the county of Racine and State of Wisconsin, have invented certain new and useful Improvements in Combination Electric Heaters; and I do hereby declare that the following is a full, clear, and exact description thereof.

This invention relates to electric heaters, and is particularly directed to a combination heater.

Objects of this invention are to provide a combination electric device which may be used as a toaster, a hot plate, and a convection type of heater; to provide an electric heater which may be quickly changed from one type to another; and to provide a heater of rugged and sturdy formation.

Further objects are to provide a heater which is equipped with means to allow for the expansion and contraction of the heating element; which is so constructed as to permit the use of a single die in forming the upper and lower portions; and which fully protects the heating elements in whatever capacity the heater may be used.

An embodiment of the invention is shown in the accompanying drawings, in which:—

Figure 1 is a plan view, with parts broken away, showing the device as it appears when used as a convection type of heater.

Figure 2 is a side elevation of the structure shown in Figure 1.

Figure 3 is an end elevation of the structure shown in Figure 2.

Figure 4 is a section on the line 4—4 of Figure 2.

The device comprises a base portion, or frame, which has a top 1 having an open central portion and supported by a plurality of legs 2. The heating element may comprise a series of resistance wires 3, of any desired material such as will offer a relatively high electrical resistance and resist oxidation and fusion. These wires 3 are stretched between refractory end members, or plates, 4 which are yieldingly pressed apart to maintain the wires taut and to prevent sagging, thereby compensating any variation in the length of the wires.

The yielding mounting for the members 4 is attained by securing a plurality of pairs of aligned, spaced rods 5 and 6 to these members, by means of the nuts 8, and positioning a compression spring 7 between the opposed ends of such rods. A convenient way of slidably holding these rods and maintaining alignment of the members of each pair, is to provide tubes 9 which house the spring and a portion of each of the pairs of rods. The ends 10 of the rods upon which the nuts 8 are screwed are, of course, threaded and may conveniently be of reduced diameter to provide a shouldered portion. It may be found desirable to provide a pair of washers 11 and 12 upon the reduced portions and upon opposite sides of the refractory end plates 4. One of the washers may bear against the shouldered portion of the rod and the other against the nut 8.

The end plates 4 may be formed of any desired refractory, insulating material,—a combination of asbestos and Portland cement has been found satisfactory. These members are preferably provided with a plurality of relatively shallow slits extending downwardly from their upper edges. The resistance wires, or heating wires, are passed through these slits and loop around the portions of the end plates between such slits. In this manner, the wires are located a slight distance below the upper edge of the end members and are uniformly spaced apart.

The bottom portion is provided with a protecting, or supporting, grid 13 which is preferably composed of a plurality of thin metal straps which may be either freely interlaced, or may be positively joined at their crossing points. The ends of the grid are secured to a bead 14 of the bottom member, and rest upon the top edges of the refractory members 4.

The ends of the wires 3 are secured to terminals 15 to which the attaching cable may be either permanently or detachably joined, such cable thereafter leading outwardly through the opening 16.

A convenient manner of supporting the entire heating unit is to provide angle irons, or transverse members, 21 which are secured within the base portion. These members support the reduced extensions 10 of the rods 5 and 6 and allow such rods to freely adjust themselves. The heating unit is held in place by the grid 13 which bears upon the end members 4.

The device as thus far described, is admirably adapted for use as a hot plate or

toaster, the articles to be heated or toasted being placed upon the grid 13. It may be found desirable to provide a reflecting and protecting plate 17 spaced a material distance below the heating element, to prevent the direct radiation of heat to the support upon which the toaster may be placed. This plate further enhances the effect of the device as it upwardly reflects the normally wasted heat rays. It is to be noted that the plate 17 is spaced a slight distance below the lower edge of the top or body portion 1 of the bottom member to allow free circulation of air.

When it is desired to convert this type of device into a convection heater, a rectangular drum 18 is slipped over the bead or upwardly projecting flange 14 of the bottom member, and is secured in place by means of spring clips 19 carried by the bottom member and cooperating with suitably shaped portions of the drum 18. The drum is surmounted by a top 20 identical with the top 1 of the bottom member,—in fact, both members 1 and 20 are formed by the same die. The central upper portion of the top member is open and may or may not be provided with an open work grid.

When the heater is used with the top member in place, the convection currents of air are greatly augmented. The air freely passes between the lower edge of the member 1 of the bottom and the plate 17 and, after being heated by the wires 3, passes upwardly through the drum 18 at a relatively rapid rate. It is also to be noted that the metallic drum 18 and top 20 aid in distributing the heat as they provide, in effect, radiating surfaces.

It is found that the tensioning means provided for the wires 3, aids in the assembly of the heating element, as it assures a substantially uniform tension of the wires, and thereby relieves the assembler of the necessity of exactly securing the desired tension as he places each wire in position.

It will be seen that a combination heater has been provided which may be readily and quickly changed from one type of heater to another. It will further be seen that effective means have been provided for preventing sagging of the heating wires, and for maintaining the correct tension.

It will further be seen that a heater has been provided which may be very readily and cheaply manufactured, and which is of sturdy and rugged formation.

I claim:

1. An electric heater comprising a frame, rods slidably carried thereby, resilient means tending to force said rods apart, refractory members carried by said rods, and resistance elements strung between said members, whereby any variation in length of said elements will be compensated for by said resilient means.

2. An electric heater comprising a frame, rods slidably carried thereby, resilient means tending to force said rods apart, refractory members carried by said rods, a tube housing said resilient means and a portion of said rods, and resistance elements strung between said members, whereby any variation in length of said elements will be compensated for by said resilient means.

3. An electric heater comprising a frame, rods slidably carried thereby, resilient means tending to force said rods apart, refractory members carried by said rods, resistance elements strung between said members, and a supporting grid resting upon said members.

4. An electric heater comprising a frame, aligned spaced rods slidably carried thereby, resilient means interposed between the ends of said rods, a tube surrounding said resilient means and a portion of said rods, refractory members secured to the outer ends of said rods, a heating element stretched between said members, and a protecting grid carried by said frame and resting upon said members.

5. A combination electric heating device comprising a base, a heating element carried by said base and located above its lower portion, a protecting openwork grid spaced a distance above said heating element and adapted to support articles to be heated, and a removable drum adapted to be attached to said base to surround and extend upwardly from said heating element to increase convection currents of air.

6. An electric heater comprising a base portion including a top member having an open central portion, a top portion including a drum adapted to detachably fit the base portion and surmounted by a top member identical with that of the base portion, an openwork grid positioned across the open portion of the top member for the base portion, and heating elements carried by the base and positioned below the grid.

In testimony that I claim the foregoing I have hereunto set my hand at Racine, in the county of Racine and State of Wisconsin.

EMANUEL G. EBERHARDT.