2 Sheets--Sheet 1.

# J. L. LA ROSE.

## Improvement in Grain-Separators.

No. 132,674. Patented Oct. 29, 1872.

Fig. 1.

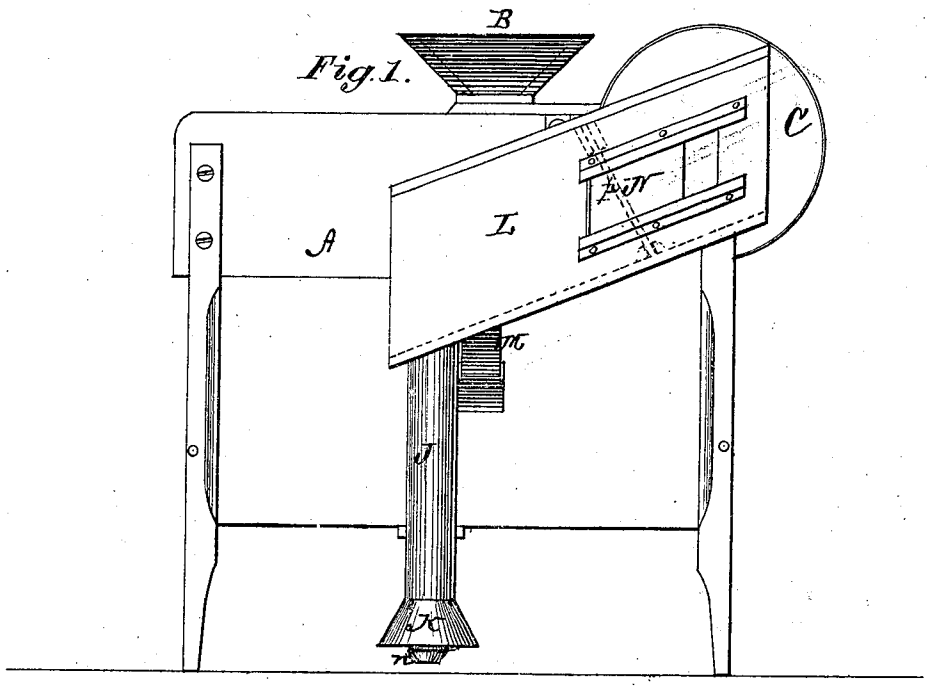


Fig 2.

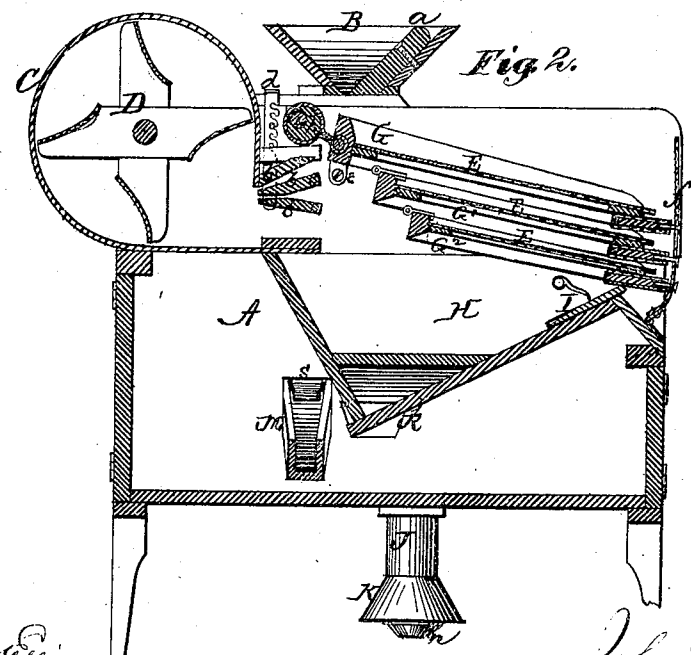


Witnesses
John A. Ellis
Wm. K. Ellis

Inventor
John L. La Rose
per
F. H. Alexander & Co
Attys.

AM. PHOTO-LITHOGRAPHIC CO. N.Y. (OSBORNE'S PROCESS.)

2 Sheets--Sheet 2.

# J. L. LA ROSE.

## Improvement in Grain-Separators.

No. 132,674. Patented Oct. 29, 1872.

Fig. 3.

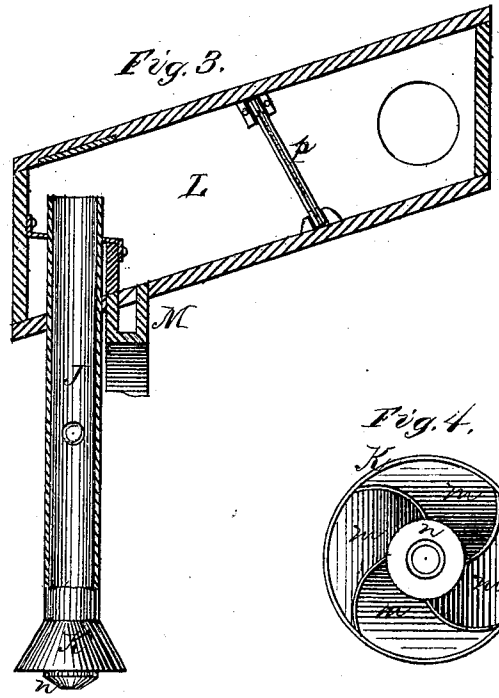


Fig. 4.



Witnesses
John A. Ewin.
J. A. Lowndes

Inventor
John L. LaRose
Per
T. H. Alexander & Co.
Att'y

AM. PHOTO-LITHOGRAPHIC CO. N.Y. (OSBORNE'S PROCESS.)

# UNITED STATES PATENT OFFICE.

JOHN L. LA ROSE, OF LEAVENWORTH, KANSAS.

## IMPROVEMENT IN GRAIN-SEPARATORS.

Specification forming part of Letters Patent No. **132,674**, dated October 29, 1872.

*To all whom it may concern:*

Be it known that I, JOHN L. LA ROSE, of Leavenworth, in the county of Leavenworth and State of Kansas, have invented certain new and useful Improvements in Wheat-Separators; and I do hereby declare that the following is a full, clear, and exact description thereof, reference being had to the accompanying drawing and to the letters of reference marked thereon which form a part of this specification.

The nature of my invention consists in the construction and arrangement of a separator for cleaning wheat or other small grain or seed, as will be hereinafter more fully set forth.

In order to enable others skilled in the art to which my invention appertains to make and use the same, I will now proceed to describe its construction and operation, referring to the annexed drawing, in which—

Figure 1 is a side elevation of my entire machine; Fig. 2 is a longitudinal vertical section of the same; Fig. 3 is a section of the box L and the cylinder J; and Fig. 4 is a bottom view of the cylinder J.

A represents the frame of my separator, having at the top the hopper B, which, on one side, is provided with a slide, *a*, to regulate the feeding of the wheat to the machine. C is the fan-case, within which is placed and revolves the fan D. The wings or blades of this fan are curved or concave, as shown in Fig. 2, making a more powerful blast with less power than can be obtained with the usual straight-bladed fans. At the mouth of the fan-case C are valves *b b*, which are pivoted at their front edges, and their rear edges supported and adjusted by means of hangers *d d*, so as to direct the full force of the blast to either one of the screens at a time, or to two screens or part to each, or all the air below the screens, for the purpose of governing and properly applying the air for cleaning the different kinds of grain. The shaker containing the screens is made in sections G, $G^1$, and $G^2$, hinged together at the back end, each section being grooved for the reception of a screen. The top section G rests on side supporters *e* at the back end, and the front ends of all the sections are secured to a perforated bar, *f*, which is hinged at its lower end. By means of this perforated bar each or all of the screens E E may be raised and lowered at will. The sections of the shaker are hinged together at the back end in step-form from the bottom up, giving more slide to oats and long material on each screen, and less screen-surface as it passes down to the lower screen. The top section G is connected with an eccentric, *h*, attached on a shaft, *i*, which eccentric, as the shaft revolves, gives the required motion to the screens. The wheat, after passing through the last screen, falls down into the bottom hopper H, and from thence passes through a spout, *k*, into a vertical cylinder or trunk, J, arranged on the outside of the frame A. In the hopper H is an adjustable slide, I, to close the space between the edge of said hopper and the front end of the lower screen at whatever height said screen may be placed. The lower end of the vertical cylinder J is provided with spiral winding apertures, on the side covered with spiral winding flanges *m m*, forming the funnel-shaped mouth K, with a funnel-shaped cap, *n*, as a covering over the end of the cylinder, said cap having an opening in the center equal in size to the space where the wheat passes into the cylinder. The spiral flanges *m m* cause the air to pass into the cylinder as a whirl at or through the side apertures, spirally or winding, to the verge of the cylinder or trunk, producing a whirlwind. The opening in the center of the cap *n* allows the wheat to pass out below without obstruction, while the whirling air causes all the light material—such as smut, chaff, &c.—to pass up through the upper end of the cylinder into the side box L, where it drops in an eddy in the lower part of the box, and is carried off by a spout, M, where, by its pressure, it raises a valve, *s*, in the same, so as to drop out. The side box L is in the shape of a rhomboid, the cylinder J entering its bottom at its lower end. This box is provided with a screen partition, *p*, dividing the interior into two chambers or sections, so as to retain all the refuse in the lower section of the box and let it pass out through the body of the machine by means of the spout M, without entering the upper section and the horizontal fan D. In the upper part of the box L is a rhomboid-shaped slide-valve, N, to regulate the draft passing up through the cylinder J.

Having thus fully described my invention, what I claim as new, and desire to secure by Letters Patent, is—

1. The cylinder or trunk J, having its lower end provided with spiral winding apertures on the side covered with spiral winding flanges *m m*, forming the funnel-shaped mouth K, and with the funnel-shaped cap *n*, covering the end of the cylinder, said cap having a central aperture for the passage of the wheat, and the flanges causing the air to enter the cylinder on a whirl, all as herein set forth.

2. The arrangement, at the mouth of the fan under the hopper, of one or more valves *b*, hinged or pivoted at the front edge, and adjustable at the rear edge by hangers *d*, substantially as set forth.

3. A shaker for grain-separators, made in sections, hinged together at their rear ends in step-form.

4. In combination, with the sectional shaker G G$^1$ G$^2$ hinged together as described, the stationary supporters *e e*, and the hinged perforated supporting-bar *f*.

5. The sliding board I, arranged in the bottom hopper H.

6. The rhomboid-shaped side box L, with screen partition *p*, dividing the interior into two sections, lower and upper, and rhomboid-shaped slide-valve N.

7. The combination of the cylinder J with rhomboid-shaped side box L and spout M, with valve *s*.

In testimony that I claim the foregoing as my own I affix my signature in presence of two witnesses.

JOHN L. LA ROSE.

Witnesses:

JOHN WILLIAMS,

C. THOLM.