No. 763,873. PATENTED JUNE 28, 1904.

C. A. FOX.

HAND STAMP.

APPLICATION FILED FEB. 9, 1903.

NO MODEL. 4 SHEETS—SHEET 1.

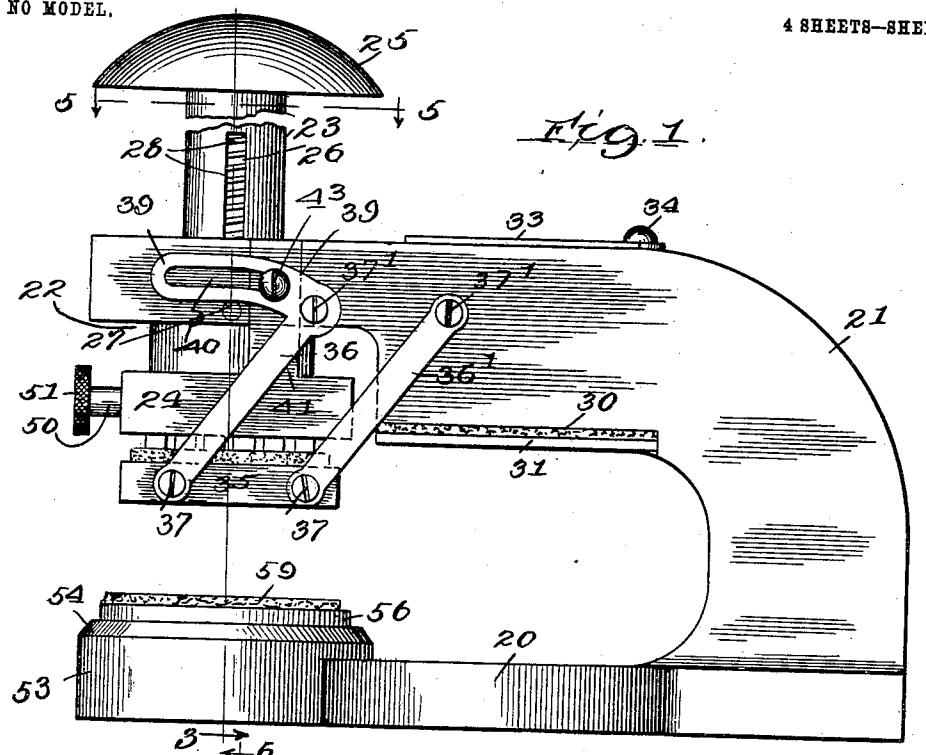

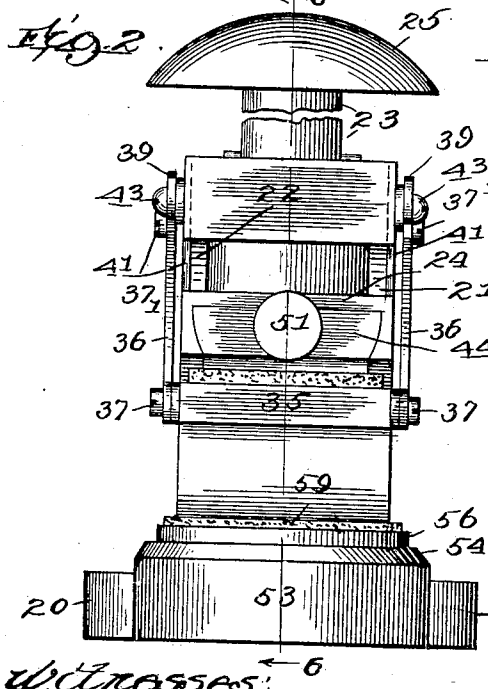

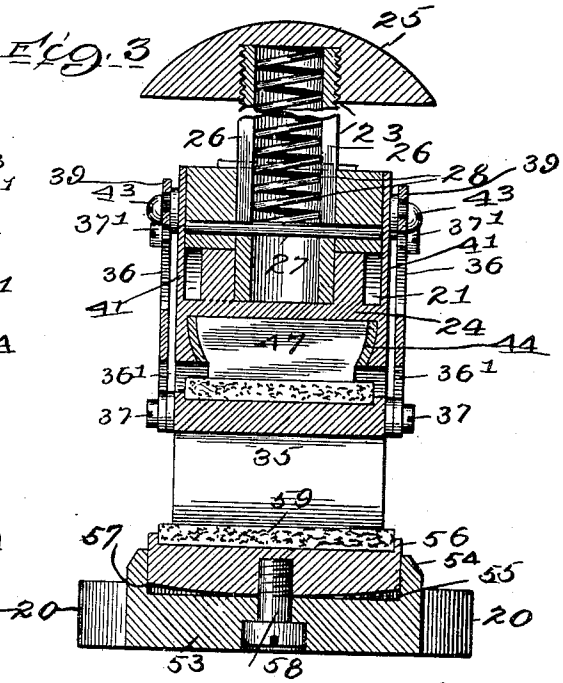

Witnesses:
Harry B. White
Ray White.

Inventor:
Clarence A. Fox
By Foré & Baine Atty.

THE NORRIS PETERS CO., PHOTO-LITHO., WASHINGTON, D. C.

No. 763,873. PATENTED JUNE 28, 1904.

C. A. FOX.

HAND STAMP.

APPLICATION FILED FEB. 9, 1903.

NO MODEL 4 SHEETS—SHEET 2.

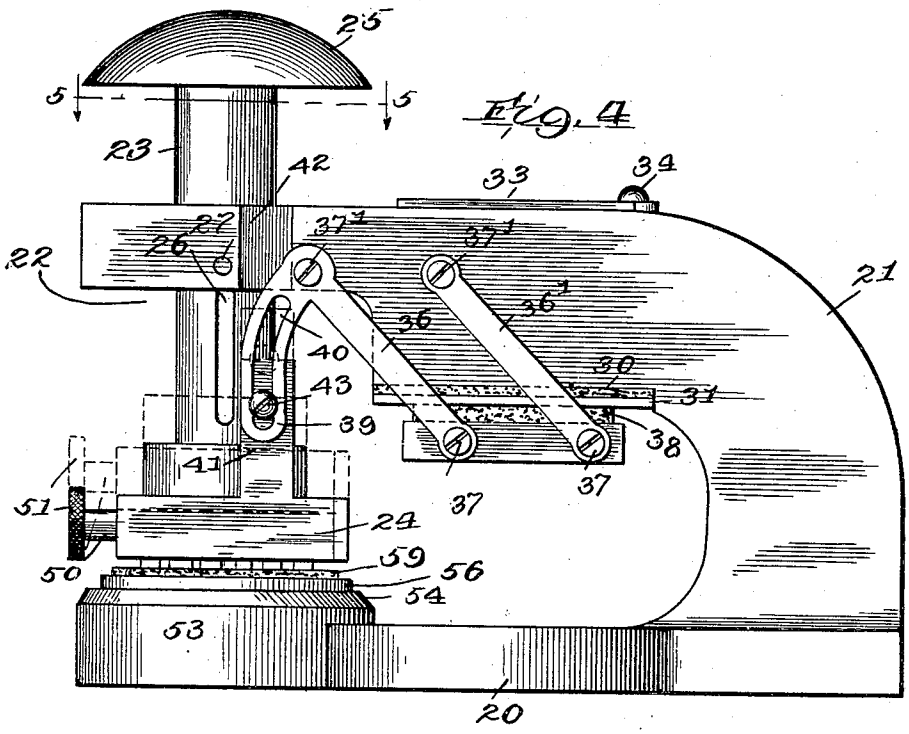

Fig. 4

Fig. 5

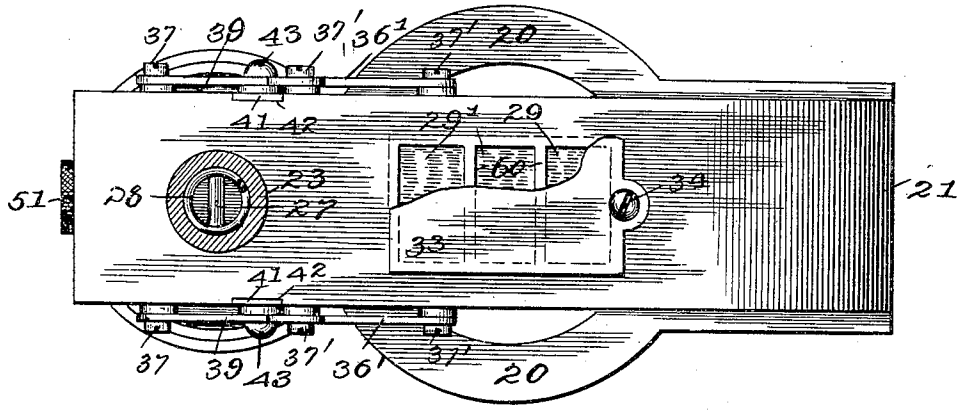

Witnesses:
Harry A. White
Ray White.

Inventor.
Clarence A. Fox.
By Fonée Bain Atty.

THE NORRIS PETERS CO., PHOTO-LITHO., WASHINGTON, D. C.

No. 763,873. PATENTED JUNE 28, 1904.

C. A. FOX.

HAND STAMP.

APPLICATION FILED FEB. 9, 1903.

NO MODEL. 4 SHEETS—SHEET 3.

Fig. 6

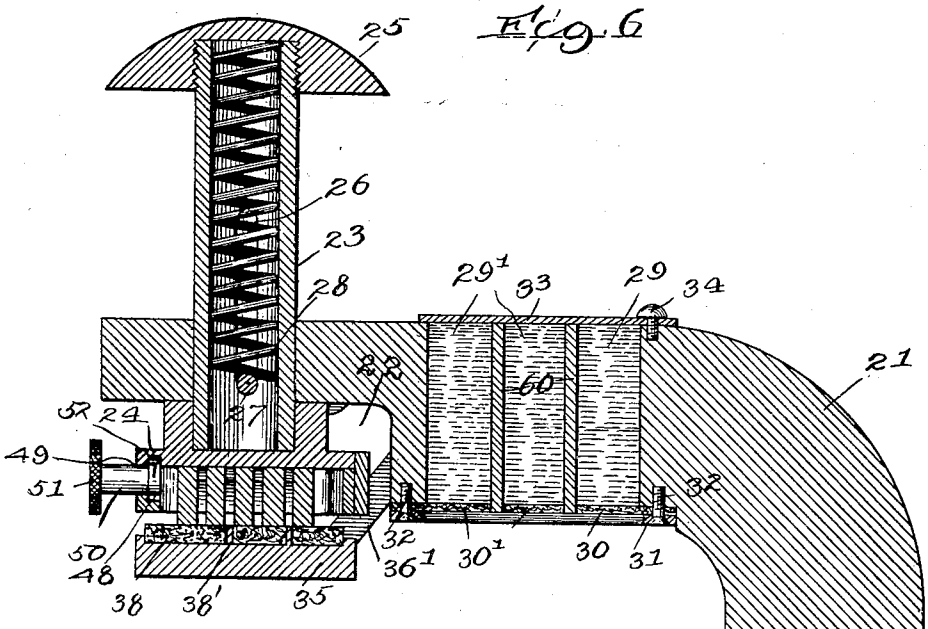

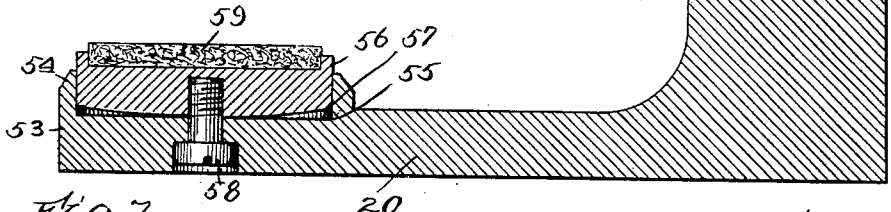

Fig. 7

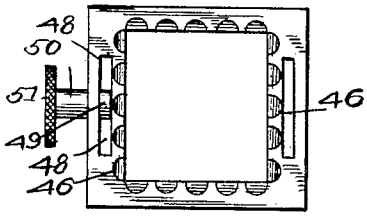

Fig. 10

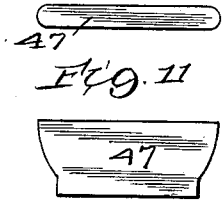

Fig. 8

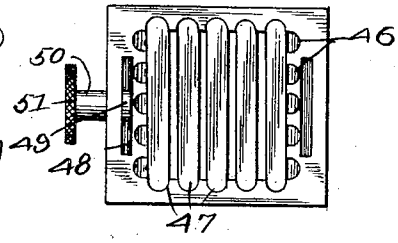

Fig. 9.

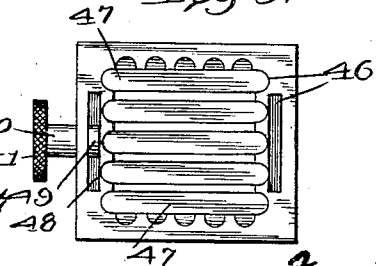

Witnesses.

Harry R. White

Ray White.

Inventor.

Clarence A. Fox.

By Forrest Bain Atty.

THE NORRIS PETERS CO., PHOTO-LITHO., WASHINGTON, D. C.

No. 763,873. PATENTED JUNE 28, 1904.

C. A. FOX.

HAND STAMP.

APPLICATION FILED FEB. 9, 1903.

NO MODEL. 4 SHEETS—SHEET 4.

Fig. 12

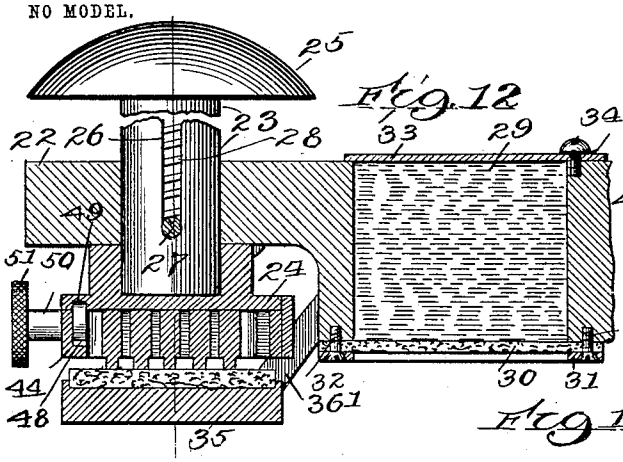

Fig. 13

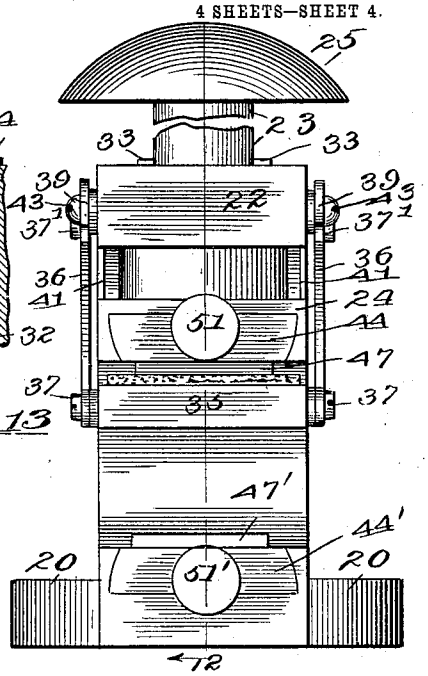

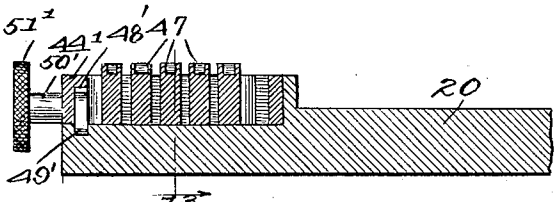

Fig. 14

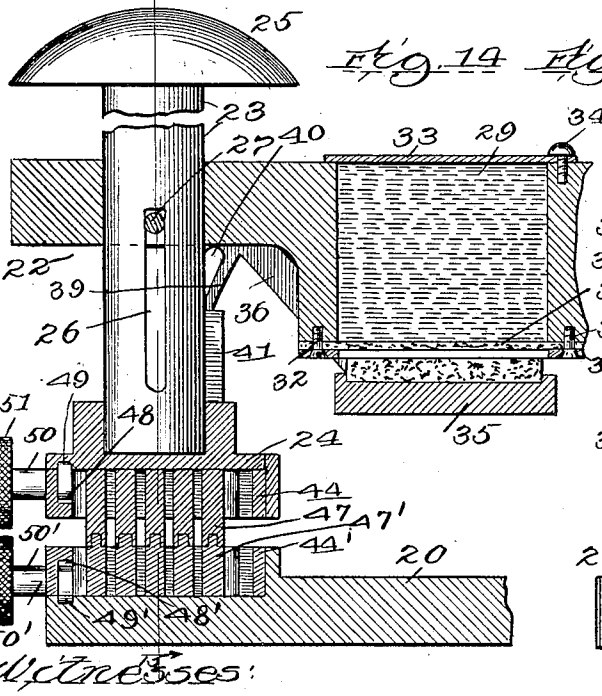

Fig. 15

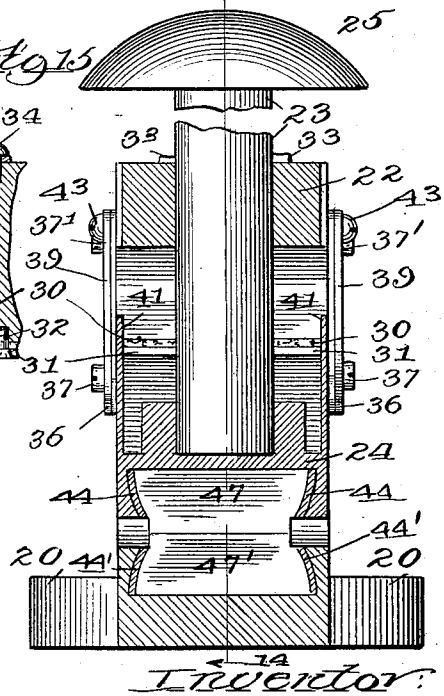

Witnesses:

Harry A. Whitside

Ray White.

Inventor:

Clarence A. Fox.

By Foree & Bain Atty.

THE NORRIS PETERS CO., PHOTO-LITHO., WASHINGTON, D. C.

No. 763,873. Patented June 28, 1904.

UNITED STATES PATENT OFFICE.

CLARENCE A. FOX, OF CHICAGO, ILLINOIS.

HAND-STAMP.

SPECIFICATION forming part of Letters Patent No. 763,873, dated June 28, 1904.

Application filed February 9, 1903. Serial No. 142,463. (No model.)

To all whom it may concern:

Be it known that I, CLARENCE A. FOX, of Chicago, in the county of Cook and State of Illinois, have invented certain new and useful Improvements in Hand-Stamps; and I hereby declare that the following is a full, clear, and exact description thereof, reference being had to the accompanying drawings, which form part of this specification.

My invention relates to improvements in hand-stamps, and has for its primary object to provide a self-inking hand-stamp adapted for rapid manipulation and unfailing in its action.

More specifically, one of the objects of my invention is to provide a novel arrangement of the inking-pad-moving devices relative to the stamping instrumentalities whereby the inking-pad will be rapidly removed from the path of movement of the impression-head during the first part of the excursion thereof and then after a traverse at a gradually-decreasing speed be brought to rest in accurate and intimate contact with the source of ink-supply, maintained in such position for a relatively long period during the remainder of the excursion of the impression-head, and accurately returned to its initial position in contact with the printing-type during each operation of the stamp.

A further object of my invention is to provide an improved impression head or type carrier so constructed that the type may be readily removed and replaced or arranged in different printing positions with relation to the frame of the machine.

A further object of my invention is to provide a novel arrangement of the platen whereby the platen is moved to prevent excessive wear upon the platen in certain areas thereof.

A further object of my invention is to provide an arrangement of the inking devices whereby my improved stamp is adapted to print in two or more colors at a single impression.

Other and further objects than those enumerated will become apparent to those skilled in the art from the following description; and to these ends my invention consists in the features of construction and arrangement hereinafter described, and specified in the claims.

Throughout the drawings like numerals of reference refer to like parts.

In the drawings, Figure 1 is a side elevation of a stamp embodying the features of my invention, showing the parts in normal or inactive position. Fig. 2 is a front elevation of the same. Fig. 3 is a transverse vertical section taken on line 3 3 of Fig. 1. Fig. 4 is a side elevation showing in full lines the position of the parts when the stamp is depressed to its full extent and in dotted lines the relative positions of the parts at one point in the excursion of the impression-head. Fig. 5 is a plan view of the stamp, showing the plunger in section and a part of the reservoir-cover broken away. Fig. 6 is a central longitudinal vertical section taken on line 6 6 of Fig. 2. Fig. 7 is a detail plan view of the type-drawer. Fig. 8 is a similar view showing a series of logotype or dies disposed in one arrangement therein. Fig. 9 is a similar view illustrating the logotype arranged in an alternative position therein. Figs. 10 and 11 are respectively a top plan view and side elevation of one of the logotype or dies adapted to be inserted in the drawer. Fig. 12 is a central longitudinal vertical section of a portion of a modified form of stamp adapted for embossing. Fig. 13 is a front elevation of the same. Fig. 14 is a section similar to Fig. 12, showing the stamp in depressed position. Fig. 15 is a transverse vertical section taken on line 15 15 of Fig. 14.

The frame of my stamp comprises a bed-plate 20, from the rear end of which projects a pedestal 21, curved upward for a suitable distance and then forward over the bed-plate 20, in parallelism thereto. The forward end of pedestal 21 is preferably recessed, as shown at 22, and is suitably apertured to afford a bearing for plunger-spindle 23, provided at its lower end with the impression-head 24 and at its upper end with the handle 25. When the parts are in normal position, as illustrated in Fig. 1, the impression-head is retracted into the recess 22, so that its lower surface is practically flush with the lower surface of the

pedestal 21. The plunger-spindle 23 is hollow and is provided with diametrically opposite elongated slots 26, engaged by a pin 27, passing transversely and horizontally through the plunger and fixed at its ends in the pedestal 21.

28 is a coiled helical spring arranged within the plunger and finding abutment at one end against the pin 27 and at its other end against the under surface of the handle 25, screwed to the open upper end of the plunger. Said spring therefore tends to normally hold the parts in the position illustrated in Figs. 1 and 6.

In its thickened portion in rear of the plunger-bearing the pedestal 21 is chambered, as at 29, to form an ink-reservoir, the bottom of which is closed by an ink-supply pad 30, of felt or other suitable absorbent material, secured in position by an open frame 31, affixed to the pedestal 21 by suitable means, such as the screws 32. The top of the reservoir is preferably closed by a suitable closure 33, herein illustrated as a door pivoted to the pedestal at 34.

35 indicates an inking-pad base supported by two pairs of companion links, of which the forward pair are numbered 36 and the rear pair 36′, all arranged in parallelism and each pivotally connected at its lower end to the pad-base at 37 and at its upper end to the pedestal, as at 37′. The pad-base 35 thus supported is horizontally arranged, and it will be seen that while readily movable within the limits of movement of the link system 36 and 36′ the parallel arrangement of the links will serve to maintain it always horizontal. The pivot-points 37′ are so disposed with reference to the other parts of the stamp that the pad-base when swung forward will register with the impression-head 24 and when swung rearwardly will register with the ink-supplying pad 30. The base 35 is provided on its upper surface with suitable ink receiving and transferring pad proper, 38, and said parts collectively will be hereinafter referred to as the "inking-pad."

The forward links 36 of the link system are provided with integral forwardly-projecting arms 39, whereby they are constituted bell-crank levers. The arms 39 are curved throughout a short portion of their length adjacent to pivot-points 37′ and are then formed straight to their free extremities. Cam-slots 40 of similar configuration are formed in said arms for a purpose to be described.

41 indicates guiding-strips secured to or formed integral with the impression-head 24 and projecting upward therefrom. 42 indicates recesses cut into the sides of the pedestal to receive and guide said strips. 43 indicates pins, preferably in the form of headed screws, projecting from said strips 41 through the slots 40 in the arms 39.

It will be seen that when the handle 25 is depressed to force the impression-head downward the pins 43 will be caused to move vertically downward, carrying with them the lever-arms 39. This movement of the lever-arms causes a rapid shift of the inking-pad out of the path of the impression-head toward the rear of the machine, its movement decreasing in velocity as the slot 40 approaches a vertical position, until at the point in the excursion of the impression-head indicated in dotted lines in Fig. 4 the inking-pad is brought to a stop in registering receptive contact with the ink-supply pad 30. The straight portion of the slot 40 is now in vertical position, so that the remainder of the excursion of the impression-head is made without moving the inking-pad bed from its receptive position. The depression of the handle 25 also causes a compression of the spring 28, which upon the release of the handle expands, restoring the parts to normal position. During the first part of the upward movement of the impression-head the straight portion of each cam-slot 40 is traversed by its pin 43, so that no movement is imparted to the arm 39 or its associated inking-pad. During the last part of the movement of the impression-head the pins or screws 43 engage the curved portion of the cam-slots 40 and the inking-pad is restored to its normal position, as indicated in Fig. 1.

The impression-head 24 is provided with a sliding type drawer or carrier 44, arranged in a suitable recess formed therein. The sides of the drawer 44 and the corresponding sides of the recess are preferably curved inwardly toward the bottom, as illustrated in Figs. 2 and 3, and the drawer is so held that its bottom comes flush with the lower face of the impression-head. The drawer is preferably of such shape that its interior opening forms a square the opposite sides of which are provided with corresponding logotype-receiving grooves 46. Said grooves are preferably rounded in plan and inwardly curved toward the bottom to correspond to the outer curve of the sides of the drawer, whereby they are adapted to receive logotype 47 of the configuration illustrated in Figs. 10 and 11. When in position, the printing-faces of the logotype project below the drawer and form the impression-face of the head. It will be seen that the logotype 47 may be placed in the drawer in either longitudinal or lateral position, as indicated in Figs. 8 and 9, so that the impression made thereby will be either parallel or transverse to the axis of the frame.

48 indicates a recess formed in the inner side of the front wall of the drawer to receive a latch 49, mounted on a spindle 50, projecting through the said front wall and carrying on its outer end a knob or handle 51. When the drawer is inserted in the head so that its back abuts against the rear wall of said head,

the knob 51 may be turned to cause the latch 49 to assume an upright position engaging a suitable recess 52 in the top of the head 24 and locking the drawer in position. When it is desired to remove a logotype and replace it with another—as, for example, to change the date if the stamp be used as a dating-stamp—it is only necessary to release the latch 49 and withdraw the drawer, when any or all of the logotypes may be lifted from their sockets and replaced by others, if desired.

Referring now to the platen arrangement, the bed 20 at its forward end is provided with a circular enlargement 53, having upturned flanges 54 at the edge thereof to form a circular flat-bottomed recess 55. Within this recess is mounted for rotation a metallic platen-plate 56. The under surface of the platen-plate is preferably chamfered off to a frusto-conical shape, so that said plate has bearing on a relatively small surface near the center thereof. A pivot-screw 58, countersunk in the bed 20 and engaging with its threaded end the plate 56, retains said plate within its recess, while permitting it to have free rotation therein.

59 indicates a pad of yielding material—such as rubber, felt, fiber, or the like—suitably secured upon the face of the plate 56. The platen-plate 56 and its pad are together referred to as the "platen."

In operation the blows of the logotype or dies upon the platen cause the same to yield slightly in varying directions and to twist more or less upon its pivotal screw, so that the platen will not be successively struck in exactly the same places by the type. Thus excessive wear upon certain portions of the pad 59 is prevented.

I prefer that my stamp be so constructed as to be capable of printing in various colors by a single impression, and to this end I provide the reservoir 29 with vertical partitions 60 dividing the same into a series of compartments, herein shown as three in number. When this is done, the inking-surface 30 is also divided into corresponding sections 30′ and the pad 38 is correspondingly divided by strips of impervious material 38′. These divisions may be made to correspond with certain lines of the logotype 47, as herein illustrated. If now various colored inks be supplied to the divided sections of the reservoir 29, the sections of the inking-pad 38 will be inked in different colors, and the impression of the logotype 47 will therefore be multicolored.

In Figs. 12 to 15 I have illustrated a modified form of my invention whereby my stamp is adapted for embossing. To this end it is only necessary to substitute for the platen a type-drawer 44′, similar in every respect to the type-drawer 44, but presenting its type-faces upward. The logotype 47, employed in the lower drawer 44′, are complementary of the type employed in the impression-head drawer—that is to say, female if the impression-head type be male, or vice versa. When now the two sets of type are brought together, as illustrated in Fig. 14, an embossed impression will be obtained. It will be apparent that should it be deemed unnecesary to print such embossed letters in colors the inking-pad and its shifting device may be entirely removed by the removal of the screws 37′ and the pins 43.

While I have herein described for purposes of illustration a specified embodiment of my invention in some detail, it will be apparent to those skilled in the art that numerous slight changes might be made in the embodiment thereof without departing from the spirit and scope of my invention.

Having described my invention, what I claim as new, and desire to secure by Letters Patent of the United States, is—

1. In a hand-stamp, the combination of a frame, a plunger mounted therein, an impression member secured to said plunger, an ink-reservoir having a flat ink-supply surface arranged parallel to the impression-surface of the impression member, a movable ink-pad having a flat face, adapted for oscillation between the impression member and the reservoir, operative connections between the ink-pad and the plunger to move the pad coincidently with the plunger, and means for constantly maintaining the flat face of the pad in parallelism to the impression and ink-supply surfaces.

2. In a hand-stamp, the combination of a frame, a plunger mounted therein having an impression-surface thereon, a movable ink-transfer pad having a flat face, a source of ink-supply having a flat supply-surface arranged directly in the path of movement of the ink-pad to meet the latter face to face and a varying-speed lever connection between the plunger and the pad arranged and adapted to move the pad quickly from the path of the plunger and bring it slowly to rest in contact with the source of ink-supply.

3. In a hand-stamp, the combination of a frame, a plunger mounted for reciprocation therein, an impression member secured to the plunger, an ink-reservoir, an ink-pad adapted for oscillation between the impression member and the reservoir, a bell-crank lever mounted on a stationary part of the frame having one arm secured to the ink-pad, and a cam-slot on its other arm, and a pin carried by the plunger for engaging said cam-slot.

4. In a hand-stamp, the combination with a frame, a plunger mounted therein, an impression member carried by said plunger, an ink-reservoir, an ink-pad adapted for oscillation between the impression member of the plunger and the ink-reservoir, parallel links suspending said pad from the frame in parallelism to the ink-supply surface of the reservoir

and the impression-surface of the impression member, and a speed multiplying and varying lever connection between one of said links and the plunger.

5. In a hand-stamp, in combination with a reciprocating plunger, an impression-head secured thereto, a recess formed in said impression-head, and a type-drawer adapted to fit in said recess, said type-drawer having an open bottom and having two opposite sides provided with corresponding separated vertical grooves contracted at their lower ends, and adapted to receive logotype.

6. In a hand-stamp, in combination with a reciprocating plunger, an impression-head secured thereto, an open-bottomed recess formed in said head and having its side walls converging toward the open bottom, a type-drawer adapted to fit in said recess, said drawer having an open bottom, and sides converging interiorly and exteriorly toward said open bottom, grooves formed interiorly in the sides of said drawer, and logotype arranged to fit in said grooves and project through the open bottom of the drawer.

7. In a hand-stamp, in combination with a movable impression-head, a type-carrier mounted thereon comprising a rectangular frame having an interior square opening, extending vertically therethrough, and corresponding grooves, contracted at their ends adjacent the impression-face of the carrier, formed on all four sides of said opening in communication therewith, and logotypes adapted to fit in said grooves with their printing-faces presented toward the impression-face of the type-carrier.

8. In a hand-stamp, the combination of a reciprocating plunger, an impression member carried by said plunger, an inking-reservoir divided into a plurality of sections, adapted to receive different-colored inks, an inking-pad adapted to be moved to register with said reservoir provided with an ink-pad similarly divided, and a connection between said ink-pad and the plunger whereby said pad is oscillated between the impression-surface and the ink-reservoir during the movement of said plunger.

9. In a hand-stamp, the combination of a frame, a reciprocating plunger mounted in said frame, a head carried by said plunger, a type-drawer in said head, logotype removably arranged in said drawer, a type-drawer slidably mounted in the base, and adapted to be moved into alinement with the type-drawer in the head, and complementary logotype removably mounted in said lower drawer.

In testimony that I claim the foregoing as my own I affix my signature in presence of two witnesses.

CLARENCE A. FOX.

In presence of—
MARY F. ALLEN,
C. F. WHITE.