(No Model.) 2 Sheets—Sheet 1.

W. H. FAHRNEY.

METHOD OF CALCINING FRIABLE MATERIALS.

No. 590,057. Patented Sept. 14, 1897.

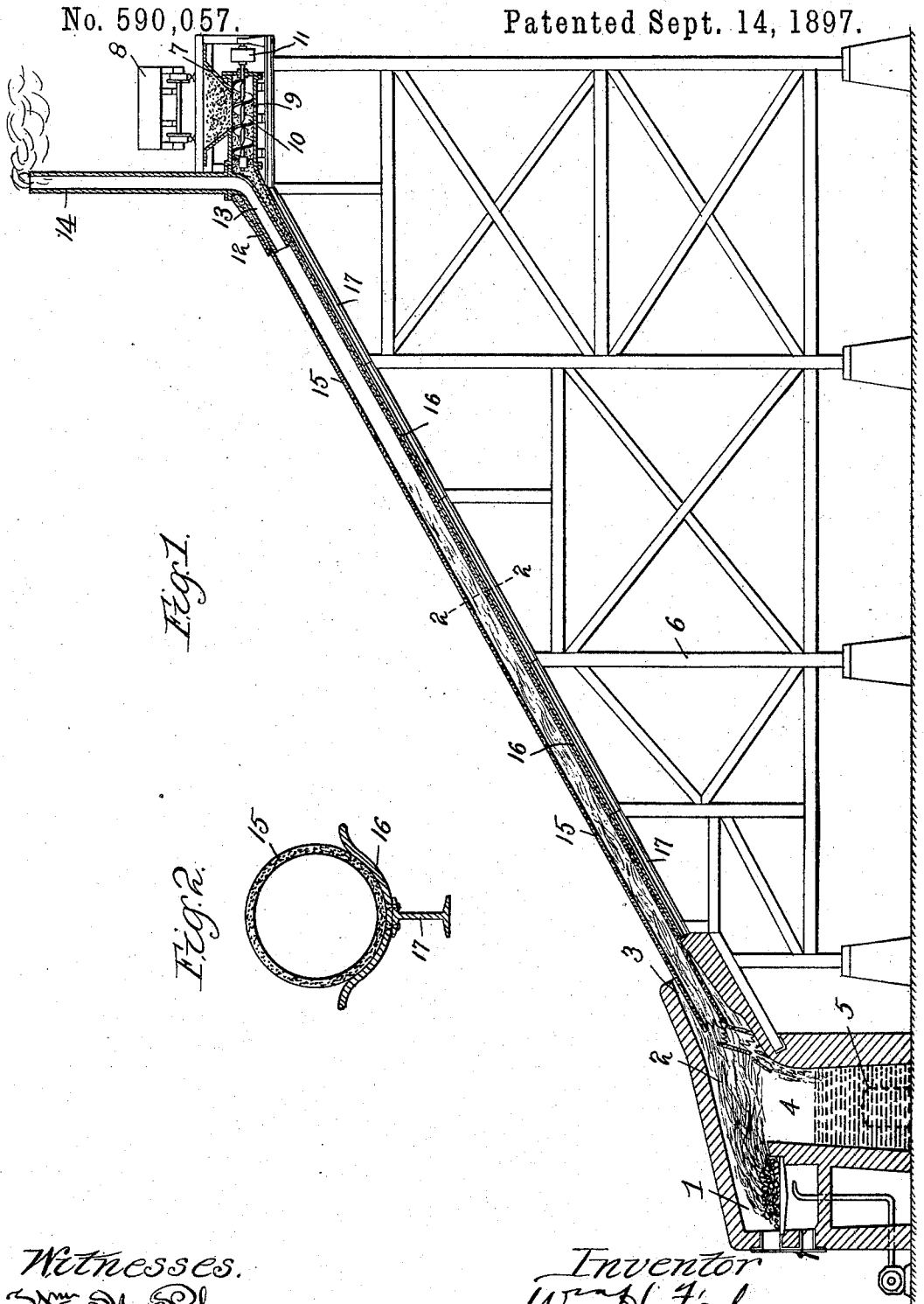

Fig. 1.

Fig. 2.

Witnesses.
Wm. M. Rheem.
Edna B. Johnson

Inventor
Wm. H. Fahrney
by Edwd. Hopkins
Atty's

THE NORRIS PETERS CO., PHOTO-LITHO., WASHINGTON, D. C.

(No Model.) 2 Sheets—Sheet 2.

W. H. FAHRNEY.

METHOD OF CALCINING FRIABLE MATERIALS.

No. 590,057. Patented Sept. 14, 1897.

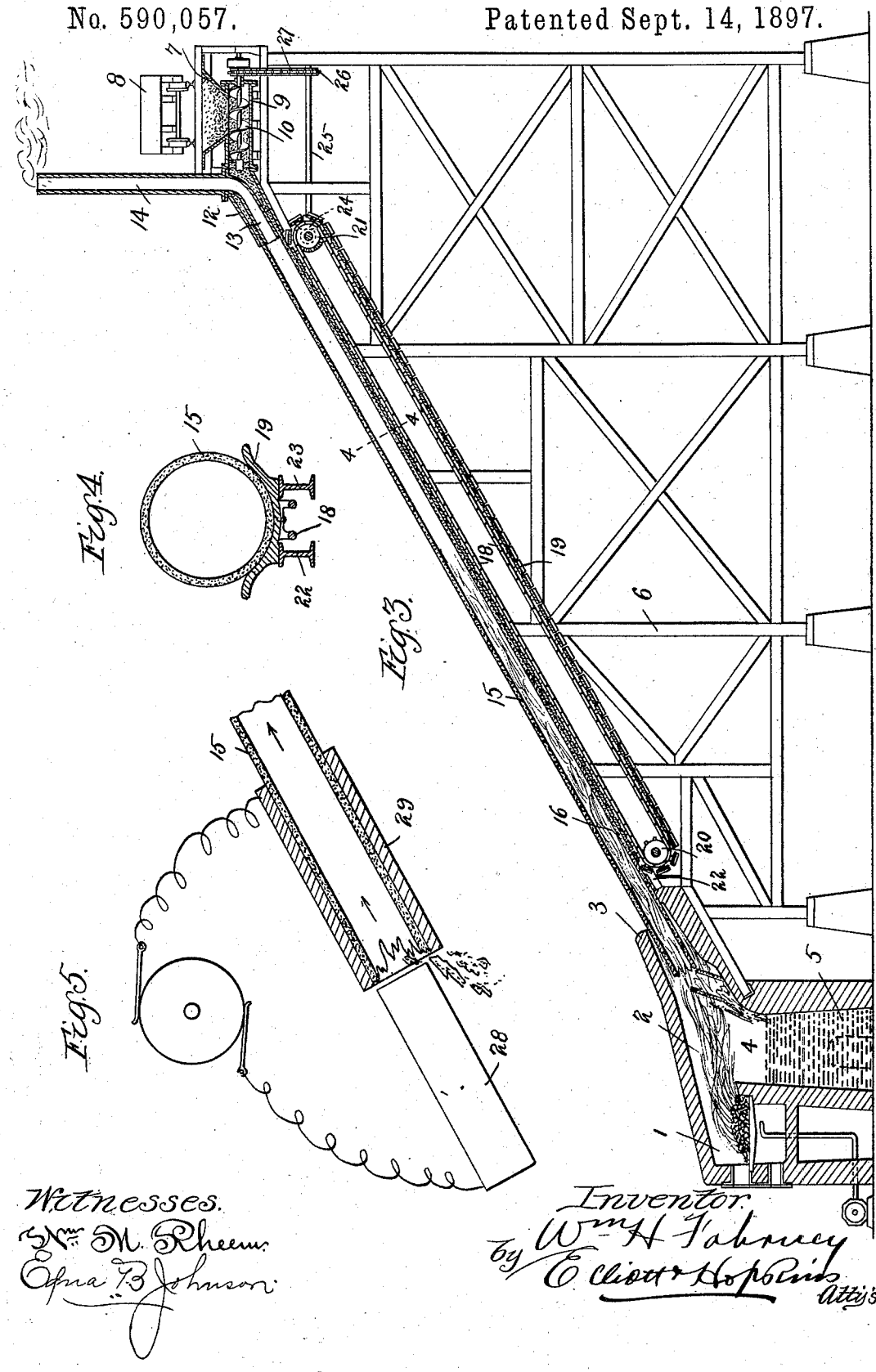

Witnesses.
Wm. N. Rheem.
Edna F. Johnson.

Inventor.
Wm. H. Fahrney
by Elliott & Hopkins
Attys

THE NORRIS PETERS CO., PHOTO-LITHO., WASHINGTON, D. C.

UNITED STATES PATENT OFFICE.

WILLIAM HENRY FAHRNEY, OF CHICAGO, ILLINOIS.

METHOD OF CALCINING FRIABLE MATERIALS.

SPECIFICATION forming part of Letters Patent No. 590,057, dated September 14, 1897.

Application filed August 12, 1896. Serial No. 602,519. (No model.)

To all whom it may concern:

Be it known that I, WILLIAM HENRY FAHRNEY, a citizen of the United States, residing at Chicago, in the county of Cook and State of Illinois, have invented a certain new and useful Method of Calcining Friable Materials, of which the following is a full, clear, and exact specification.

My invention relates more particularly to calcining or treating with heat those materials that are capable of assuming a plastic or semiplastic condition, and particularly the clay and chalk from which cement is produced; but, as will hereinafter appear, my invention is not confined to the production of cement, but is equally appropriate for the treatment by heat of any material capable of being molded in a form appropriate for treatment by my process and apparatus.

The primary object of my invention is to subject the material to the requisite degree of heat for reducing it to the desired condition without commingling therewith any of the ashes or other objectionable matter from the fire.

Another object of my invention is to feed the material into the presence of heat only so fast as the heat reduces it to the desired condition.

Another object of my invention is to utilize the material itself as a passage for the products of combustion.

Another object of my invention is to utilize the material that is being treated as the uptake for the furnace and to feed such uptake into the furnace as fast as it is reduced by the heat; and a still further object of my invention is to utilize the material itself as the uptake for the furnace, which shall be continuously forming at one end as fast as the other end is reduced by the heat.

With these ends in view my invention consists in certain features of novelty described in the specification and more particularly pointed out in the claims.

In the said drawings, Figure 1 is a vertical longitudinal section of an apparatus by which my invention is carried into effect. Fig. 2 is a transverse sectional view thereof, taken on the line 2 2, Fig. 1. Fig. 3 is a view similar to Fig. 1, illustrating certain modifications in the means of feeding the tubular material downward. Fig. 4 is an enlarged transverse view thereof, taken on the line 4 4, Fig. 3; and Fig. 5 is a diagrammatic illustration of an electrical furnace embodying my invention and by which my method may be practiced.

Like signs of reference indicate like parts throughout the several views.

In carrying out my invention I employ a furnace or source of heat of any suitable form having an escape-passage for the products of combustion, and the material to be calcined or otherwise treated by the heat of such furnace is formed into a tube, which is constantly fed into said escape-passage of the furnace, or, if desired, intermittently fed thereinto as fast as the inserted end or end in the furnace is calcined or otherwise reduced by the action of the heat and disintegrates and falls into a suitable receptacle or chamber. The tubular material thus projected into the furnace is preferably so arranged as to constitute the uptake or smoke-pipe or a part thereof, so that the products of combustion will not only impinge the inserted end of the tube, but will pass along it before it reaches the furnace, and thus impart their heat thereto in the maximum degree, and thus thoroughly drying and heating the tube render it susceptible of disintegration by the action of the heat instantly it enters the flameway of the furnace and without the necessity of remaining over the fire any considerable length of time and becoming contaminated with the ashes and cinders therefrom, as heretofore; but a further and equal advantage of this method consists in the rapidity with which the material may be continuously fed into the furnace, inasmuch as it is prepared for immediate calcining by the escaping products of combustion which have heretofore passed off without being utilized. This tubular form of material is preferably formed continuously or as fast at one end as it is disintegrated or calcined at the other, so that the material will constitute a continuous uptake or smoke-pipe of unvarying length.

I will now describe more particularly with reference to the drawings the simple example of an apparatus for carrying out my invention.

1 represents a furnace of any suitable con-

struction, having a flameway 2, which leads to a passage or exit 3 for the products of combustion, and under which flameway is formed a pit or chamber 4, into which the calcined material falls and from which it may be removed through any suitable door or opening 5.

Extending upwardly from the passage 3 is a suitable trestle-work or support 6, upon the top of which is arranged a hopper 7, into which the clay and chalk or other material to be calcined may be deposited from a car 8, mounted on rails over the hopper 7, as usual, or which material may be deposited therein in any other convenient way.

Arranged under the hopper 7 is a cylinder or drum 9, in which is situated a screw conveyer 10, which may be driven by a pulley 11 from any suitable source of power (not shown) and which conveyer serves to force the material, which is previously given a plastic or semiplastic consistency, into a mold which is constituted by a cylindrical portion 12, communicating with the cylinder 9 and projecting downwardly toward the opening 3 of the furnace, and an internal neck or hollow core 13, situated concentrically within the portion 12 and being formed on or secured to the lower end of a smoke-stack 14, so that as the material is forced into the annular space between the cylindrical portion 12 and the internal neck or core 13 it will be molded into the form of a tile or tube 15 and projected downwardly toward the escape-passage 3 of the furnace and which when the lower end thereof reaches and enters such passage 3 will constitute the uptake or passage for the products of combustion, which will enter the lower end of the tube 15 and pass upwardly therein and escape through the smoke-stack 14.

As the heat and products of combustion rise through the tube 15 the latter will be thoroughly dried shortly after it leaves the mold 12 13, and the end which is in close proximity to the furnace will be so highly heated as to require heating for but a short time longer before becoming fully calcined, and consequently the end of the tube 15 shortly after entering the flameway of the furnace disintegrates, as illustrated in Fig. 1, and falls into the pit 4, the under side of the flameway or passage 3 being downwardly inclined, so as to accelerate the downward movement of the calcined material after its separation from the main body of the tube.

The tubular material is preferably projected into the furnace on an incline, as shown in the drawings, but it will nevertheless be understood that it may be projected thereinto in any other position or at any other angle of inclination than that shown, it only being desirable to arrange it at such angle of inclination as to promote the draft from the furnace and at the same time enable the tube to readily slide down the trestle-work into the furnace, and in order that the tube 15 may be guided in its course toward the furnace and may be provided with a smooth way upon which to slide without undue abrasion I provide the trestle 6 with a trough 16, extending from the exit of the furnace to the mold 12 13 and being mounted on the trestle 6 and being secured in place by an I-beam 17 or any other suitable means.

My invention thus described is found of great utility in the production of hydraulic cement which is produced from chalk and clay deposited in the hopper 7 in a plastic or semiplastic condition, so as to be capable of being molded into the tubular form and thus compelled to serve as a smoke-passage, which is preferable to having the passage 3 connected by a permanent smoke-pipe with the smoke-stack 4 and then projecting such material through such permanent smoke-pipe in the form of either a tube or a trough-shaped stick; but it is also obvious that my invention may be utilized for treating any other material by heat that is capable of being molded and projected from the mold into the furnace—such, for instance, as in making calcium carbid, &c.—and I therefore do not confine the scope of my invention to either the manufacture of cement or the particular tubular form which I impart to the material preparatory to its introduction into the furnace so long as the formation is such as to constitute a passage for the current of heat.

In the form of apparatus shown in Figs. 3 and 4 I have mounted upon the trestle-work 6 an endless chain 18, to the links of which are secured a number of supports 19, which are like short sections of the trough shown in Fig. 2 and which, instead of forming a way for the tube 15 to slide on, constitute carriers which feed the tube downwardly as fast as it is formed. This chain 18 is mounted upon a pair of sprockets 20 21 and is located between a pair of I-beams 22 23, which form tracks or ways upon which the under sides of the sections 19 rest and slide. The shaft of the sprocket 21 is connected by suitable beveled gears 24 and shaft 25 to a sprocket-wheel 26, which derives its motion from the shaft of the worm of the conveyer 10 through the medium of a chain belt 27.

It is also evident my method may be carried out by means of an electrical furnace—such, for instance, as that illustrated in Fig. 5—in which 28 represents one electrode or carbon and 29 the other, the latter, however, being cylindrical or hollow and forming a passage for the entrance of the tube of material 15 to be calcined, which is projected through the hollow electrode 29 to the point at which the arc forms between the two electrodes and at which point the material will become calcined and the tube disintegrate and fall from the hollow electrode 29 in the manner illustrated in the drawings, the tube 15 being formed as before described and fed forward into the hollow electrode as rapidly as the end thereof disintegrates and falls away, and the hollow electrode and tube 15 being in-

clined it will be seen that an upward current of the heat will be induced in the tube 15, and this current will serve to dry and heat the material preparatory to its admission into the furnace.

Having thus described my invention, what I claim as new, and desire to secure by Letters Patent, is—

1. The herein-described method for the purpose stated which consists in forming a tube open at both ends and projecting such tube into the presence of a current of heat and lengthwise of such current, whereby said tube will be at once treated by the heat and serve as a passage for said current, substantially as set forth.

2. The herein-described method for the purposes stated which consists in continuously forming a tube open at both ends and projecting such tube into the presence of a current of heat and in the opposite direction to such current and as fast as the tube is formed, substantially as set forth.

3. The herein-described method for the purposes stated consisting in continuously forming a tube open at both ends and projecting such tube in a downwardly-inclined direction into the presence of a current of heat and in the opposite direction to such current and as fast as the tube is formed, substantially as set forth.

WILLIAM HENRY FAHRNEY.

Witnesses:
EDNA B. JOHNSON,
F. A. HOPKINS.