(No Model.) 4 Sheets—Sheet 1.

C. C. WORTHINGTON.

ACCUMULATOR FOR DIRECT ACTING ENGINES.

No. 455,935. Patented July 14, 1891.

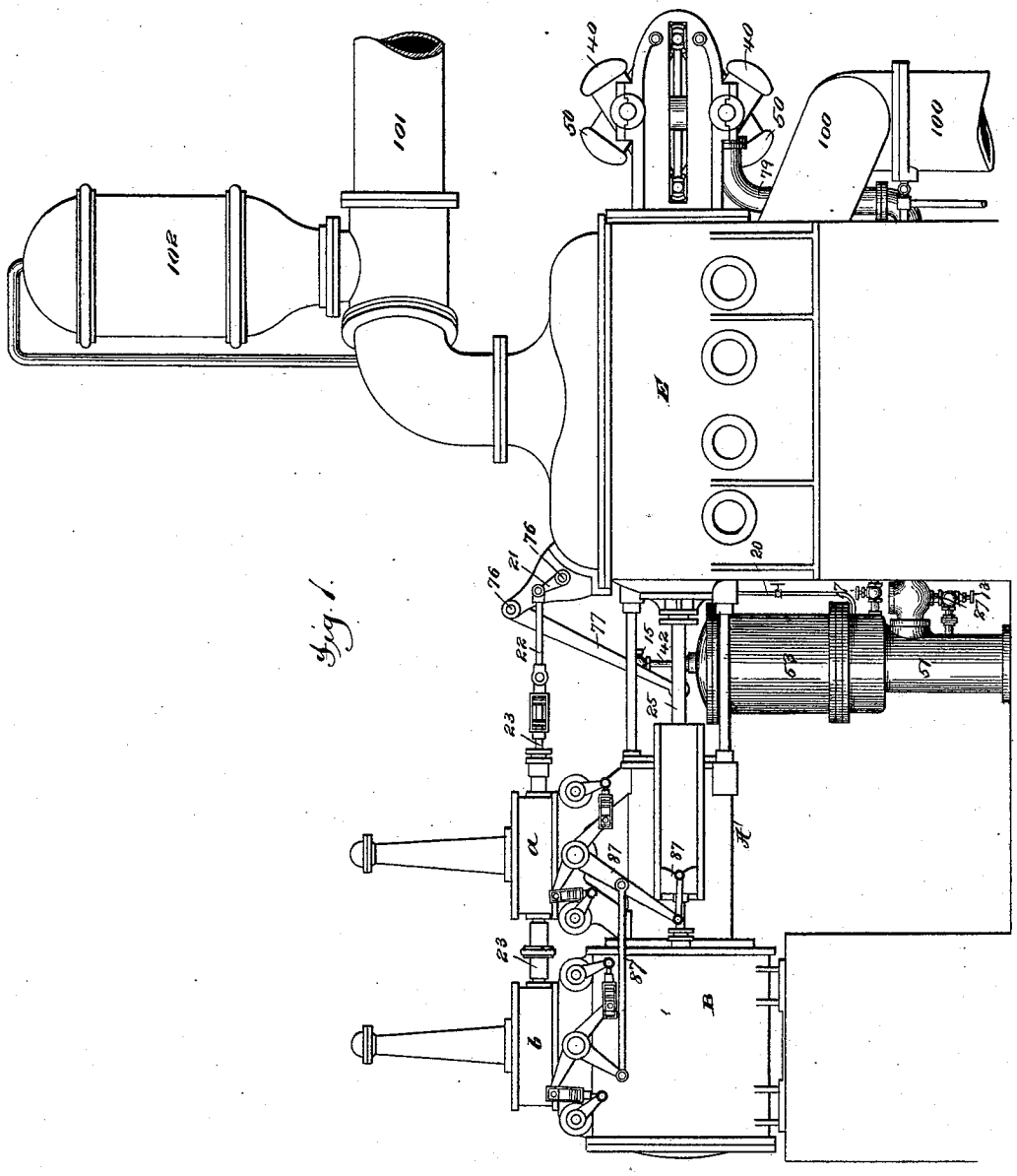

Fig. 1.

Attest:
Geo. H. Potts.
J. J. Kennedy

Inventor:
Charles C. Worthington
by Philipp Philipp & Hoover
Attys.

THE NORRIS PETERS CO., PHOTO-LITHO., WASHINGTON, D. C.

(No Model.) 4 Sheets—Sheet 2.

C. C. WORTHINGTON.

ACCUMULATOR FOR DIRECT ACTING ENGINES.

No. 455,935. Patented July 14, 1891.

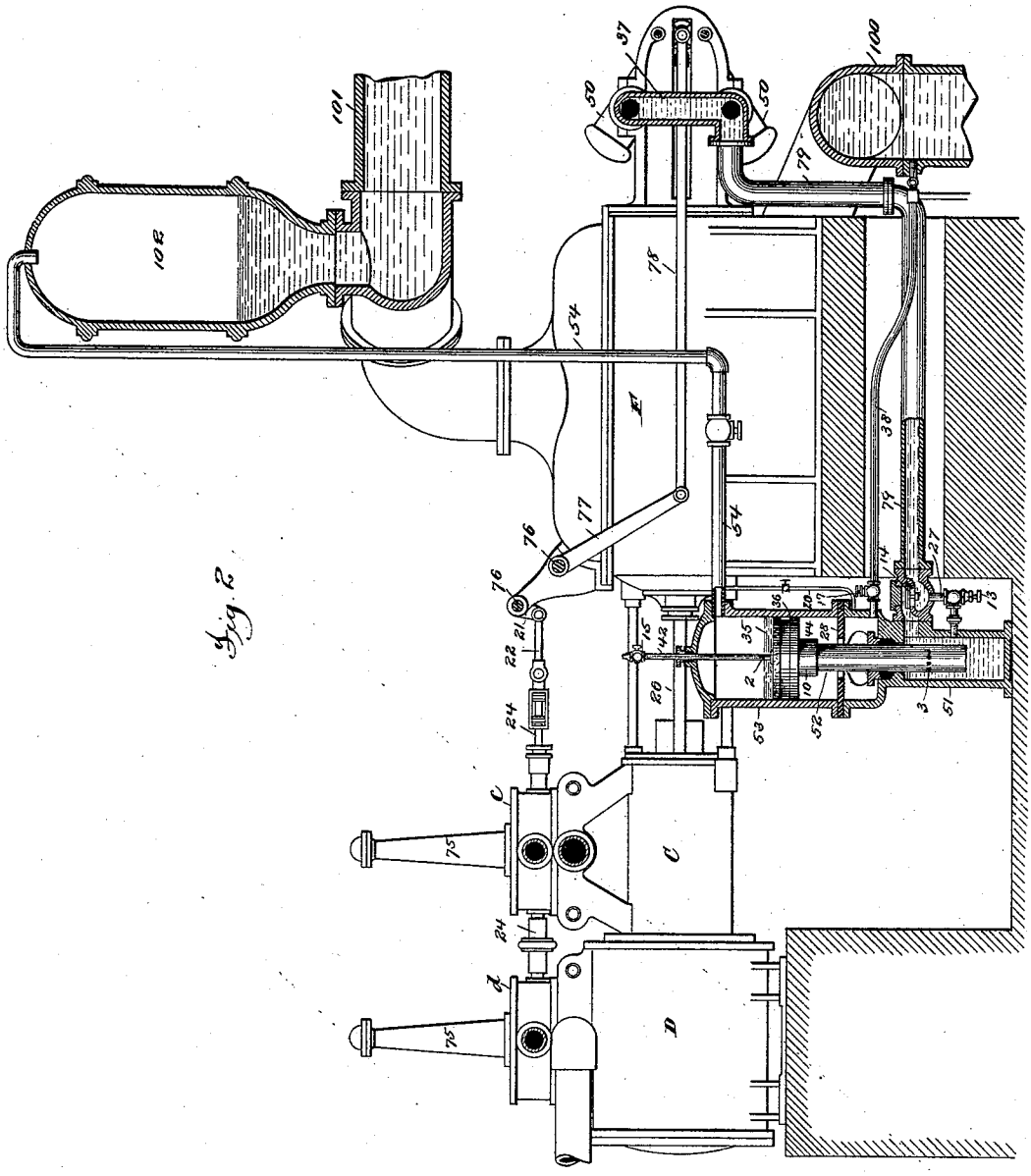

Fig. 2.

Attest:
Geo. H. Botts.
J. J. Kennedy

Inventor:
Charles C. Worthington
by Philip Philips & Hovey
Attys.

THE NORRIS PETERS CO., PHOTO-LITHO., WASHINGTON, D. C.

(No Model.) 4 Sheets—Sheet 3.

C. C. WORTHINGTON.

ACCUMULATOR FOR DIRECT ACTING ENGINES.

No. 455,935. Patented July 14, 1891.

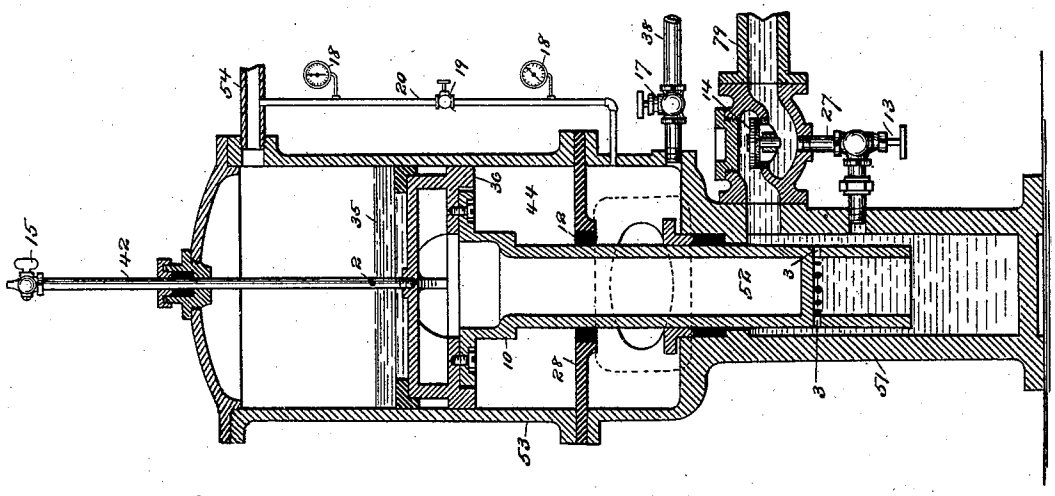

Fig. 4.

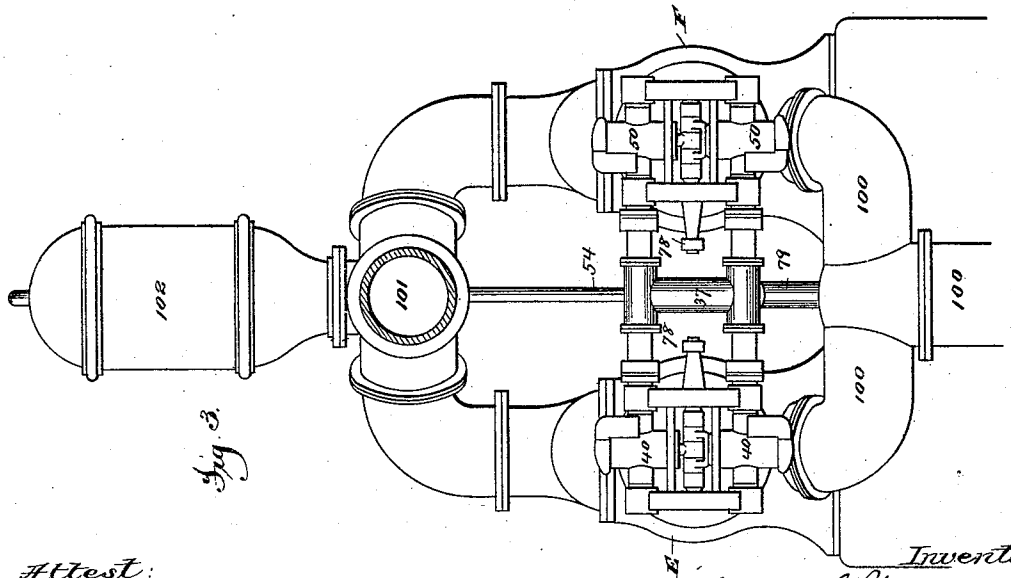

Fig. 3.

Attest:
Geo. H. Bolte
J. J. Kennedy

Inventor:
Charles C. Worthington
by Philipp Philipp & Hovey
Attys.

THE NORRIS PETERS CO., PHOTO-LITHO., WASHINGTON, D. C.

(No Model.) 4 Sheets—Sheet 4.

C. C. WORTHINGTON.

ACCUMULATOR FOR DIRECT ACTING ENGINES.

No. 455,935. Patented July 14, 1891.

Fig. 8.

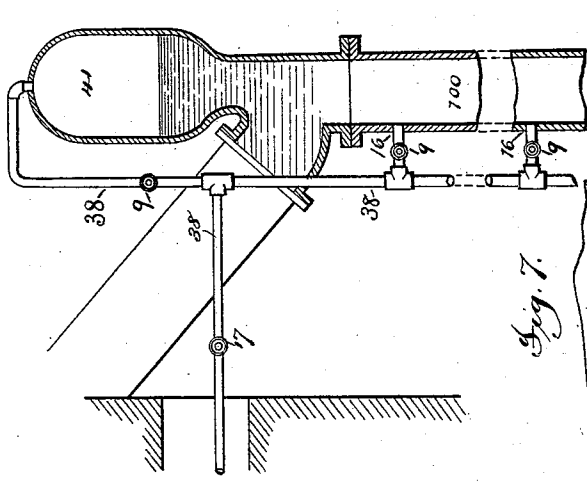

Fig. 7.

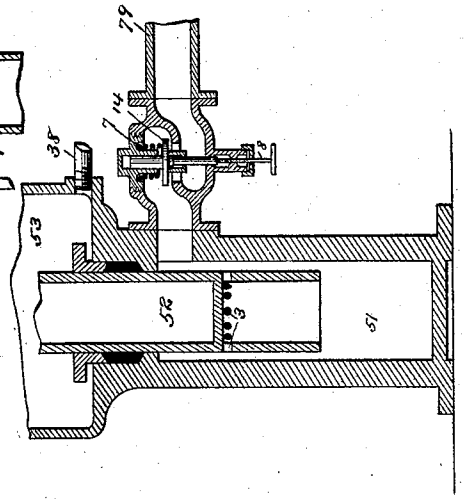

Fig. 5.

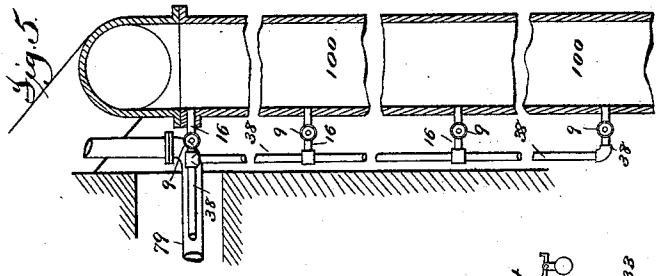

Fig. 6.

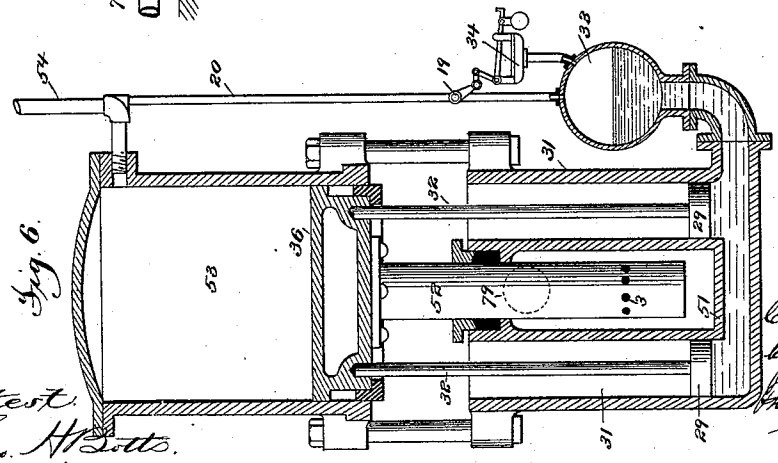

Inventor
Charles C. Worthington
by
Philip P. Phillips & Hoover
Attys.

Attest.
Geo. H. Sotts.
J. J. Kennedy.

THE NORRIS PETERS CO., PHOTO-LITHO., WASHINGTON, D. C.

UNITED STATES PATENT OFFICE.

CHARLES C. WORTHINGTON, OF IRVINGTON, NEW YORK.

ACCUMULATOR FOR DIRECT-ACTING ENGINES.

SPECIFICATION forming part of Letters Patent No. 455,935, dated July 14, 1891.

Application filed October 29, 1887. Serial No. 253,754. (No model.)

To all whom it may concern:

Be it known that I, CHARLES C. WORTHINGTON, a citizen of the United States, residing at Irvington, county of Westchester, and State of New York, have invented certain new and useful Improvements in Accumulators for Direct-Acting Engines, fully described and represented in the following specification and the accompanying drawings, forming a part of the same.

This invention relates generally to that class of engines which are provided with one or more compensating or auxiliary cylinders and pistons which are supplied with a suitable motor fluid, and are arranged to act in opposition to the main piston or pistons during the first part of the stroke of the engine, and in conjunction therewith during the last part of the stroke, thereby permitting the admission of the steam to the main cylinder or cylinders to be cut off before the stroke is completed without reducing the power of the engine at the end of the stroke. Forms of such an engine are shown and described in Letters Patent Nos. 292,525, 332,857, and 341,534, heretofore granted to me.

The present invention relates more particularly, however, to an engine of this general class in which an accumulator is employed for producing the required pressure upon the piston or pistons of the compensating cylinder or cylinders.

One feature of the invention relates particularly to means for adjusting or regulating the power of the accumulator to conform to the different running conditions of the engine.

Other features of the invention relate to means for packing the piston of the accumulator, means for controlling the amount of liquid interposed between the accumulator and the piston or pistons of the compensating cylinder or cylinders, means for preventing damage to the engine in case the load should be suddenly reduced or entirely taken off, and means for preventing damage to the accumulator in case, through leakage or otherwise, the plunger should descend violently to the end of its stroke.

As a full understanding of the various improvements constituting the present invention can only be given by a detailed description of the organization and operation of an engine embodying the same, all further preliminary description will be omitted and a full description given, reference being had to the accompanying drawings, in which—

Figure 1 is a side elevation of a compound duplex pumping-engine embodying the present invention, the parts being shown in the position they will occupy when the pistons of the main steam-cylinders are at the ends of their strokes in opposite directions. Fig. 2 is a sectional elevation taken between the two engines forming the duplex engine. Fig. 3 is an end elevation of the engine, looking from the right of Figs. 1 and 2. Fig. 4 is an enlarged sectional elevation of the accumulator. Fig. 5 is a view showing a continuation of the suction-main not shown in Figs. 1 and 2; and Figs. 6 and 7 are views illustrating modifications which will be hereinafter explained. Fig. 8 illustrates an addition that may be employed in connection with the construction illustrated in Figs. 1 to 5.

Referring to said figures, it is to be understood that as therein illustrated the steam end of the engine, or what may be termed the "engine proper," consists of four steam-cylinders A B and C D, which are arranged in pairs and operate upon the compound principle, the pair A B forming one side and pair C D the other side of the duplex engine. The pistons of the cylinders A B are connected to the single piston-rod 25, and the pistons of the cylinders C D are connected to the single piston-rod 26 in the same manner. The cylinders A B and C D are provided with the usual steam-chests *a b* and *c d*, having ordinary slide-valves, which are provided with balancing pistons suspended from swinging rods hung in the trunks 75 in the well-known manner. The two valves for each side of the engine are operated by the same valve-rod, and these rods 23 24 are provided with the usual connections, consisting of links 22, rock-shafts 76, having arms 21 77 and links 78, by which the valves of each side of the engine are operated by the other side in the same manner as described in the Letters Patent No. 332,857, before referred to. The steam is admitted to the steam-chests *a c*, and, after acting in the cylinders A C, is exhausted and enters the cylinders B D, where it acts at a reduced

pressure, and after acting in these cylinders is exhausted into a condenser or to the open air. The steam connections are the same as described in the Letters Patent last referred to.

The organization thus briefly outlined is common, and will be readily understood by those familiar with this class of engines.

The water end of the engine, or what may be termed the "pump proper," consists of two water-cylinders E F, the plungers of which are connected directly to the piston-rods 25 26. The water-cylinders are provided with the usual suction and force chambers, the former communicating with the suction-main 100 and the latter with the force-main 101. The force-main is also provided with the usual air-chamber 102, placed in any convenient location to equalize the flow of the liquid discharged from the pump. The piston-rods 25 26, instead of terminating at the plungers of the water-cylinders, are extended and pass through the opposite ends of said cylinders and are connected to the piston-rods of two pairs of oscillating cylinders 40 50, which are arranged at the ends of the water-cylinders and are supported upon trunnions, the same as described in Letters Patent No. 332,857. The connections between the piston-rods 25 26 and the piston-rods of the oscillating cylinders and the connections with the links 78 and also the connections through which the motor fluid passes into and out of the oscillating cylinders 40 50, are the same as described in said Letters Patent, and need not therefore be herein particularly referred to. It is to be remarked, however, that the oscillating cylinders 40 50, instead of being located at the ends of the water-cylinders, may be located between the steam and water cylinders, as shown in the Letters Patent No. 341,534, or they may be located at the outer end of the steam-cylinders, the piston-rods being extended through the steam-cylinders, or, in fact, the compensating cylinders may be located in any convenient position. It is also to be remarked that one compensating cylinder may be employed for each of the main piston-rods instead of two, and also that the piston or pistons of the compensating cylinder or cylinders may be arranged to act on the main piston-rod in any of the ways shown in my Letters Patent before referred to, or in any other suitable way. By the employment of the compensating cylinders it becomes possible to cut off the admission of steam to the main cylinders before the end of the stroke without interfering with the proper operation of the engine, and each side of the engine is therefore provided with a cut-off mechanism 87, by which the steam is cut off from the main steam-cylinders when their pistons have arrived at the proper points in their strokes, after which the stroke is completed by the expansive force of the steam in the cylinders, aided by the power exerted by the pistons of the compensating cylinders. These cut-off mechanisms are of the form shown in my prior Letters Patent Nos. 332,857 and 342,669, and need not therefore be herein described in detail. It is to be remarked, however, that any other form of cut-off mechanism may be used, if preferred.

The motor fluid which acts upon the pistons of the compensating cylinders may, as setforth in my Letters Patent before referred to, be steam, air, or other gas, or it may be a liquid; but it has been found most desirable that the fluid which acts directly upon the pistons of the compensating cylinders should be a liquid which is in turn subjected to the pressure of a gas, such as air. It has also been found that in order to develop the desired amount of power in the compensating cylinders without making them of an inconveniently large size, it is desirable to employ an accumulator, which is interposed between the compensating cylinders and the source from which the pressure of their motor fluid is derived. The pipe 37 therefore, through which the motor-fluid passes to and from the compensating cylinders, communicates with a pipe 79, which is in communication with the chamber or cylinder 51 of an accumulator, which chamber, together with the pipes 79 37 and the connections with the compensating cylinders, are filled with water, oil, or other liquid, which also fills the compensating cylinders behind their pistons. The upper end of the cylinder 51 is provided with an opening, through which passes the smaller end of a differential plunger 52, the larger end 36 of which forms a piston, which works in a cylinder 53, which is located above the cylinder 51, and is provided at a point above the piston 36 with a pipe 54, which communicates with the air-chamber 102, and through which air from the chamber 102 passes, so as to fill the cylinder 53 above the piston, and thus communicate its pressure to the piston which forms the larger end of the plunger.

The accumulator, as thus far described, is substantially the same as shown in my prior Letters Patent No. 341,534. The air for operating upon the plunger of the accumulator may of course be supplied from any other suitable source, as set forth in my said prior Letters Patent.

The operation of the organization, as thus far described, will be readily understood without extended description. Assuming the engine to be in operation and the normal pressure to exist in the force-main 101, the pressure existing in the main will, through the body of air which fills the chamber 102, pipe 54, and cylinder 53, be communicated to the larger end of the plunger 52, and thence through the smaller end of the plunger and the liquid in the cylinder 51 and its connections to the compensating cylinders, and thus impart a pressure to the pistons of the compensating cylinders, which will be to the pressure in the main as the larger end of the plunger 52 is to its smaller end. As either side of

the engine commences its stroke in either direction, the liquid in the compensating cylinders will be forced out of those cylinders and back into the cylinder 51, thereby raising the plunger 52 against the pressure in the main and offering a gradually-decreasing resistance to the engine, and this will continue until the engine arrives at the middle of its stroke. During the last half of the stroke the operation will be reversed. The liquid will pass from the cylinder 51 back into the compensating cylinders, thereby allowing the plunger 52 to descend, and thus the pressure in the main multiplied by the accumulator will offer a gradually-increasing assistance to the engine during the last part of the stroke.

It sometimes happens, owing to a change in the character or amount of the work which the engine is to perform, that it is desirable to cause the compensating cylinders to develop a greater or less amount of power without changing the relative sizes of the two ends of the plunger 52 or the pressure at the source from which the pressure upon the larger end of the plunger is derived. It is also frequently desirable to do this temporarily to meet the requirements of the conditions under which the engine may be operating at any particular time, and to meet all conditions it is desirable to provide means by which the power developed by the accumulator can be reduced below what is due to the pressure in the force-main as well as raised above what is due to that pressure. To meet the first of these requirements, the pipe 54 is provided with a branch 20, which communicates with the cylinder 53, below the piston 36, and which has a cock or valve 19, which can be operated when desired, so as to allow more or less air to pass from the pipe 54 to the cylinder 53 beneath the piston 36. By this means a back-pressure can readily be established beneath the piston 36, which will oppose the direct pressure upon the opposite side of the piston, and thus decrease the power developed by the accumulator, and by this means and by properly manipulating the cock or valve 19 the power developed by the accumulator can be reduced to any desired extent to meet any temporary or permanent condition under which the engine may be required to operate. An ordinary automatic pressure-regulator may be applied to the cock or valve 19, so as to maintain a constant and unvarying back-pressure upon the piston 36. The pipe 20 will preferably be provided upon each side of the valve 19 with a pressure-gage 18, from which the relative pressures above and below the piston 36 can be read. Fig. 6 illustrates a slightly-modified form of apparatus for accomplishing the same result. In this case the opposing pressure, instead of being applied directly to the piston 36, is applied to one or more supplemental pistons 29, which work in small cylinders 31 at the sides of the cylinder 51, and are connected to the piston 36 by rods 32. In this case also the air-pressure is not exerted directly upon the pistons 29, but is communicated to the pistons through a body of liquid contained in a chamber 33, which communicates with the cylinders 31 and with the pipe 20. In this case, also, the cock 19 is shown as provided with an ordinary pressure-regulator 34, which acts to control the cock and maintain a uniform pressure in the chamber 33 and the cylinders 31. The operation of this form of the apparatus is the same as that first described. To meet the opposite requirement—that is to say, to raise the power developed by the accumulator to a point above that which would be developed by the unaided pressure in the force-main—the cylinder 53 is provided with means by which, when such an increase of power is required, a partial vacuum can be created and maintained in the cylinder 53 beneath the piston 36. For this purpose the cylinder is provided with a pipe 38, which communicates with the suction-main 100 at any suitable point, and this pipe is provided with a cock or valve 17, by which it can be opened or closed. By this means it is only necessary, when the conditions under which the engine is to operate require that the power developed by the accumulator should be increased, to open the valve 17. As soon as this is done the suction upon the main 100 will create a partial vacuum in the cylinder 53 beneath the piston 36, and thus the suction-pressure will act in conjunction with the force or direct pressure and increase the power developed in the accumulator by the pressure in the force-main. The quality of the vacuum thus formed in the cylinder 53 will depend upon the suction in the main 100 at the point of the connection of the pipe 38, and in order to vary this within reasonably wide limits the pipe 38 may be provided (see Figs. 5 and 8) with a number of branches 16, communicating with the suction-main at different heights, and each provided with a cock or valve 9, by which they can be controlled so as to effect the connection between the pipe 38 and main at any desired height.

It sometimes happens that the level of the water from which the pump draws its supply is subject to wide variations, thus bringing the suction-main under vacuum at times and at other times under pressure, and thus varying the amount of work to be performed by the engine. In such case it may be desirable to also connect the pipe 38 with a chamber or enlargement 41 of the suction-main (see Fig. 8) that will answer as both a vacuum-chamber and an air-chamber. When the level of the water-supply is below the pump-valves, this chamber 41 will be under partial vacuum and the power of the accumulator be correspondingly increased. When, however, the water rises above the pump-valve or above the accumulator this chamber 41 will be under such pressure as is due to the height of the water above it, and this will communicate a corresponding back-pressure to the piston 36 of

the accumulator and reduce the power of the accumulator accordingly. When under pressure the chamber 41 should be supplied with air, and this may be done either by connecting the chamber with the pipe 20 or 54, so that air can be admitted from that source, or by any other suitable and convenient means.

In order to prevent the leakage of air past the piston 36, it is desirable to provide a water-packing 35 above said piston, and as it is further desirable that the body of water thus carried above the piston should not be unnecessarily great, it is important to provide means by which any surplus of water can readily be drawn off. For this purpose the piston is provided with a tube 42, which passes through a stuffing-box in the top of the cylinder, and is provided at the proper height above the piston 36 with an opening 2, and at its upper end with a cock or valve 15. By this means whenever the body of water 35 rises above the opening 2 it is only necessary, in order to withdraw such surplus water, to open the cock 15. The pressure of air above the water will then at once force the water upward through the tube 42, and this will continue until the surface of the water is below the opening 2

The proper amount of liquid in the cylinder 51, pipe 79, and connections is maintained in any suitable manner—as, for example, by a small pump operated by the engine to force in a small amount of liquid to compensate for leakage.

In order to prevent an undue amount of liquid from being forced into the cylinder 51 and its connections, which would raise the accumulator-plunger to an improper height, the lower end of the plunger is made hollow and is provided at a suitable height with a series of openings 3. So long as the liquid in the cylinder 51 and its connections is not increased beyond about the proper volume, the plunger 52 will remain in such position that when it is raised by the forcing of the liquid backward into the cylinder 51 by the action of the compensating pistons its openings 3 will not be raised above the stuffing-box in the upper end of the cylinder. If, however, for any reason an undue volume of liquid is forced into the cylinder 51 and its connections, the plunger 52 will be raised to such an extent that as it completes its upstroke its openings 3 will be carried above the stuffing-box in the upper end of the cylinder 51, so as to communicate with the cylinder 53. As soon as this takes place the liquid from the cylinder 51 will pass through the openings 3 and be discharged into the cylinder 53, thus removing the surplus liquid from the cylinder 51 and keeping the plunger 52 in its normal position. The liquid thus forced out will escape through the pipe 38 into the suction-main, or may be drawn off in any suitable manner.

In operating engines of this class it is desirable to provide means by which in case the load should suddenly be reduced or entirely taken off the engine, as by the breaking of the force-main, the engine will be prevented from running at a violent speed. For this purpose the connections between the accumulator-cylinder and the compensating-cylinders are so arranged that the liquid is not permitted to flow from the cylinder 51 to the compensating cylinders at a greater rate of speed than is required when the engine is operating at its normal speed. This may be effected in a variety of ways, two of which are illustrated in the present case. As shown in Figs. 1, 2, and 4, the pipe 79 is provided with a check-valve 14, which is arranged to permit the liquid to pass freely from the compensating-cylinders to the cylinder 51; but, to prevent its passing in the opposite direction, the pipe 79 is also provided with a branch or by-pass 27 which passes around the valve 14, and is provided with a cock or valve 13, which can be adjusted so as to allow the liquid to pass freely in either direction, but only at such a velocity as to supply the compensating cylinders when the engine is operating at its normal speed. By this means the full power of the accumulator is exerted upon the pistons of the compensating cylinders so long as the engine does not move above its normal and proper speed; but if for any reason the speed of the engine is suddenly accelerated the pressure upon the compensating cylinders is at once greatly reduced or entirely removed, because of the inability of the liquid to flow fast enough through the valve 13, while the water passes freely back from the compensating cylinders to the accumulator through the check-valve as the engine is reversed. In Fig. 7 a modified arrangement of apparatus for accomplishing the same result is illustrated. In this case the by-pass 27 is omitted and the valve 14 is made to serve the double function of a by-pass and check-valve. This valve is arranged to permit the liquid to pass freely from the compensating cylinders to the cylinder 51, but tends to close and shut off the communication when the flow of the liquid is in the other direction. The amount of liquid that is permitted to pass in this direction may be governed by means of the adjusting-spindle 8, that bears against the under side of the valve 14 and holds it off its seat, so that the liquid can pass through it. The valve may be provided with a spring 7, which operates to normally hold the valve against the spindle 8, but will yield to allow the liquid to flow freely into the cylinder 51. This controls the speed of the engine precisely as described in the case of the arrangement shown in Fig. 4.

In case of the breaking of the pipe 79 or any of the connections with the compensating cylinders, or of the blowing out of the cylinder-packing, so as to suddenly remove the fluid from beneath the accumulator-plunger, the plunger would immediately fall and strike the bottom with great force and would

be liable, unless means were provided for preventing it, to cause damage. To prevent this the cylinder 53 is provided with a diaphragm or partition 28, located somewhat below the lowest point which the piston 36 reaches when the accumulator is operating in a proper manner, and provided with an opening 12, somewhat larger than the plunger 52. Just below the piston 36 the plunger 52 is provided with an enlargement forming a plunger 10, which is of just sufficient size to fill the opening 12. So long as the accumulator is operating properly the plunger 10 remains above the diaphragm 28 and the spaces above and below the diaphragm 28 are in free communication; but if for any reason the plunger 52 should be suddenly lowered the plunger 10 will enter the opening 12, and thereby confine a body of air in the chamber 44, formed between the diaphragm 28 and the piston 36, which air will act as a cushion to prevent the plunger from coming into contact with any metal or from striking violently, so as to cause damage.

What I claim is—

1. The combination, with an engine and its main and compensating cylinders and their pistons, of an accumulator-cylinder through which pressure is transmitted to the compensating cylinder or cylinders, connections with a source of pressure, whereby the accumulator derives its power from pressure exerted on one side of its piston, connections with a source of adjustable pressure, whereby adjustable pressure may be exerted upon the other side of said piston, and means for adjusting said adjustable pressure to regulate the amount of power developed by said accumulator, substantially as described.

2. The combination, with an engine and its main and compensating cylinders and their pistons, of an accumulator-cylinder through which pressure is transmitted to the compensating cylinder or cylinders, connections with a source of pressure, whereby the accumulator derives its power from pressure exerted on one side of its piston, connections with an elastic fluid-pressure supply, whereby pressure may be exerted upon the other side of said piston, and means for adjusting said elastic fluid-pressure to regulate the amount of power developed by said accumulator, substantially as described.

3. The combination, with an engine and its main and compensating cylinders and their pistons, of the accumulator-cylinder 53 and piston 36, the pipe 54, forming a connection between a source of pressure and one side of the accumulator-piston, the pipe 20, forming a communication between an elastic fluid-pressure supply and the opposite side of said piston, and the cock or valve 19 for controlling the pipe 20, substantially as described.

4. The combination, with an accumulator deriving its power from pressure exerted on one side of a piston, of connections with an elastic fluid-pressure supply, whereby pressure may be exerted on the other side of said piston, and means for adjusting said elastic fluid-pressure to regulate the amount of power developed by said accumulator, substantially as described.

5. The combination, with an accumulator deriving its power from pressure exerted on one side of a piston, of a source of pressure independent of the source from which the power is derived, and connections whereby pressure may be exerted upon the other side of said piston, and means for adjusting the latter pressure to regulate the amount of power developed by said accumulator, substantially as described.

6. The combination, with a pumping-engine and its main and compensating cylinders and their pistons, of the accumulator cylinder and piston, connections for applying the working pressure to the accumulator-piston, and connections with the suction-main for allowing the suction-pressure to be applied to said piston in conjunction with the working pressure, substantially as described.

7. The combination, with a pumping-engine and its main and compensating cylinders and their pistons, of the accumulator cylinder and piston, connections for applying the working pressure to the accumulator piston, a pipe connecting with the suction-main for allowing the suction-pressure to be applied to said piston in conjunction with the working pressure, and a valve apparatus for controlling the suction-pressure so applied, substantially as described.

8. The combination, with a pumping-engine and its main and compensating cylinders and their pistons, of an accumulator having a power piston one side of which is acted upon by pressure from the force-main of said engine and the other side by pressure from the suction-main of said engine, substantially as described.

9. The combination, with the accumulator and connections for applying the direct or working pressure thereto, of the pipe 38 for allowing the suction-pressure in the force-main to be applied to the accumulator in conjunction with the direct pressure, said pipe being provided with branches connected to the suction-main at different points, substantially as described.

10. The combination, with the accumulator and the connections for applying the direct or working pressure thereto, of the pipe 38, communicating with the accumulator and with a chamber connected to the suction-main, substantially as described.

11. The combination, with the accumulator cylinder and piston, of the pipe 42, passing through the cylinder-head and provided with the opening 2 and cock 15, substantially as described.

12. The combination, with an engine and its main and compensating cylinders and their pistons, of connections for supplying the mo-

tor fluid to the compensating cylinder or cylinders, and controlling devices on said connections retarding the flow of the motor fluid to said cylinder or cylinders, but permitting the fluid to flow freely from said cylinder or cylinders, substantially as described.

13. The combination, with an engine and its main and compensating cylinders and their pistons, of connections for supplying the motor fluid to said compensating cylinder or cylinders, and a check-valve controlling said connections and arranged to retard the flow of the fluid to said cylinder or cylinders, but to permit the fluid to flow freely from said cylinder or cylinders, substantially as described.

In testimony whereof I have hereunto set my hand in the presence of two subscribing witnesses.

CHARLES C. WORTHINGTON.

Witnesses:
DANIEL H. JOHNSON,
B. W. PIERSON.