(No Model.)

# F. STRAUB.

## STORM SASH VENTILATOR.

No. 405,189. Patented June 11, 1889.

Fig. 1.

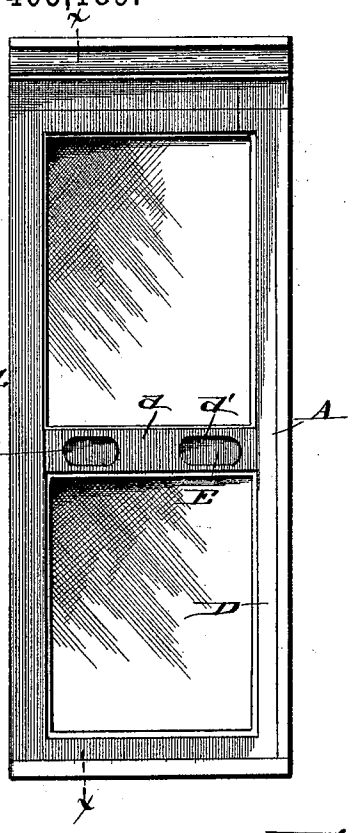


Fig. 2.

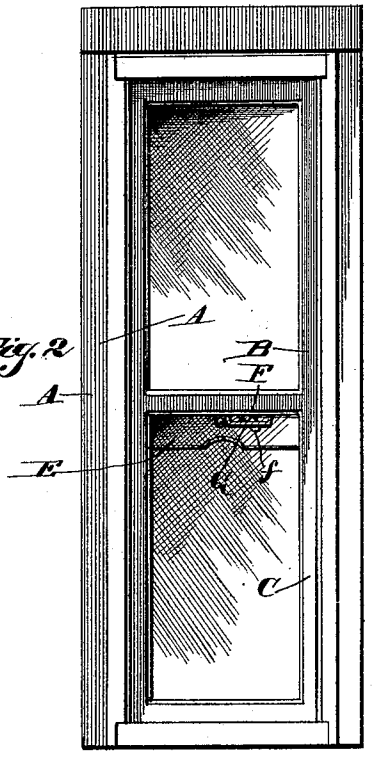


Fig. 5.

Fig. 3.

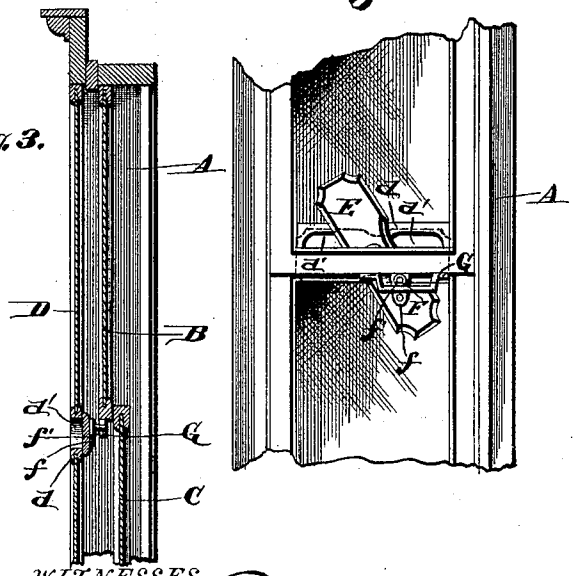


Fig. 4.

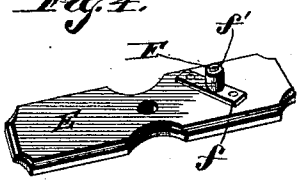


WITNESSES

Walter H. Dumphrey

Van Burun Hillyard.

INVENTOR

Frederic Straub

By R.S. & A.P. Lacey

Attorneys

N. PETERS, Photo-Lithographer, Washington, D. C.

# UNITED STATES PATENT OFFICE.

FREDERIC STRAUB, OF SURPRISE, NEBRASKA.

## STORM-SASH VENTILATOR.

SPECIFICATION forming part of Letters Patent No. 405,189, dated June 11, 1889.

Application filed November 3, 1888. Serial No. 289,932. (No model.)

*To all whom it may concern:*

Be it known that I, FREDERIC STRAUB, a citizen of the United States, residing at Surprise, in the county of Butler and State of Nebraska, have invented certain new and useful Improvements in Storm-Sash Ventilators; and I do declare the following to be a full, clear, and exact description of the invention, such as will enable others skilled in the art to which it appertains to make and use the same, reference being had to the accompanying drawings, and to letters and figures of reference marked thereon, which form a part of this specification.

This invention relates to windows, especially to that class which have storm-sashes, and aims to provide means whereby, when one of the sliding sashes is partly opened for ventilation, an opening will be disclosed simultaneously in the storm-sash to permit the free ingress or egress of air to effect a thorough ventilation of the room. The movable sash is preferably the top one, and the opening in the storm-sash is in its stile or frame.

The improvement consists of the novel features and the peculiar construction and combination of the parts, which will be hereinafter more fully described and claimed.

In the drawings, Figure 1 is a front view of a window embodying my invention; Fig. 2, a rear view of the window; Fig. 3, a vertical section on the line *x x* of Fig. 1, showing the lower portion of the frame broken away; Fig. 4, a detail perspective view of the damper, and Fig. 5 a detail view showing the damper open by full lines and closed by dotted lines.

The frame A, the sashes B and C, and the storm-sash D are of ordinary construction and of well-known arrangement. The rail *d* of the storm-sash has openings *d'*, which are closed by the damper E, which by preference is pivoted between its ends, and which is operated automatically from one of the sashes, preferably the sash B. The arm F, projecting from the damper, is engaged by the sash or a projection of the sash—as, for instance, the keeper or bail G, which is fastened to the lower edge of the said sash. The arm F projects from a plate *f*, and is provided with a roller *f'*.

The operation of the device is as follows: On lowering the sash B to ventilate the room it will bear down on the arm F and open the damper. When the window is closed, the keeper or bail will press up on the arm F and will close the damper, as will be readily understood.

Having thus described my invention, what I claim, and desire to secure by Letters Patent, is—

1. The combination, with the storm-sash having an opening for ventilation, and the movable sash, as B, of the damper for closing the opening in the storm-sash, and an arm extending from the damper and engaged by and operated from the sash B, substantially as and for the purpose described.

2. The combination, with the frame, the storm-sash having an opening for ventilation, and the damper for closing the said opening, of the movable sash having a bail or keeper, and the arm projecting from the damper and engaged by the said keeper, substantially as described.

3. The combination of the frame, the storm-sash having openings in its rail, the damper pivoted to the rail midway of its ends, the arm projecting from the damper, the movable sash, and the bail or keeper secured to and projecting from the lower edge of the said movable sash and engaged with the said arm to move the damper when the said sash is raised and lowered, substantially as and for the purpose described.

In testimony whereof I affix my signature in presence of two witnesses.

FREDERIC STRAUB.

Witnesses:

A. THARP,

JAMES H. GREENSLIT.