March 30, 1965 J. L. LIVINGOOD 3,175,827

GOLF SIGHT

Filed Aug. 12, 1963

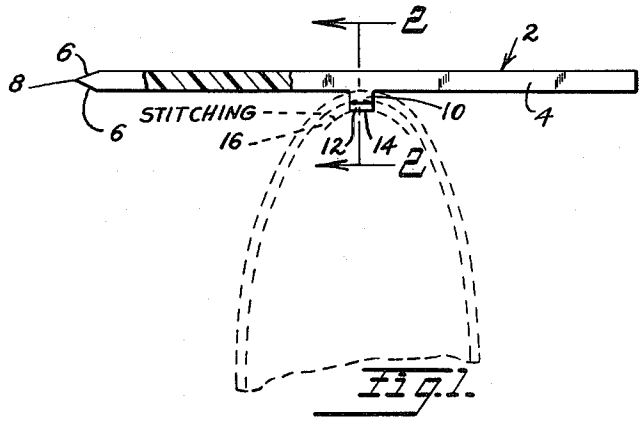

Fig. 1.

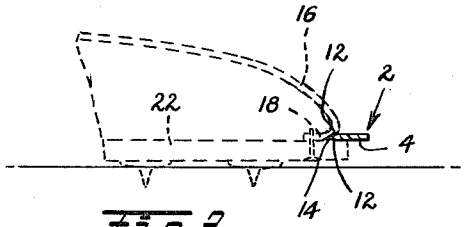

Fig. 2.

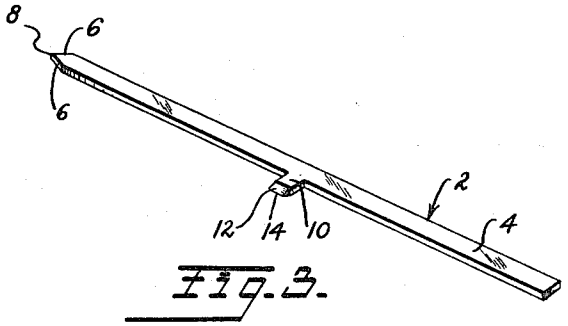

Fig. 3.

INVENTOR

John L. Livingood

BY *Bacon & Thomas*

ATTORNEYS

United States Patent Office 3,175,827 Patented Mar. 30, 1965

3,175,827

GOLF SIGHT

John L. Livingood, 80 Buttonwood Drive, Fairhaven, N.J.

Filed Aug. 12, 1963, Ser. No. 301,554
8 Claims. (Cl. 273—183)

This invention relates to a golf sight adapted to be removably attached to the toe of a golfer's shoe for lining up a golf shot.

It is one of the objects of the invention to provide an elongated golf sight for use in golfing which may be readily detachably secured to the toe of a golfer's shoe.

Another object of the invention is to provide an integral golf sight adapted to be frictionally attached and held between the toe cap and sole of a golfer's shoe.

Another object is to provide a one-piece, elongated, plastic golf sight which may be conveniently carried by a golfer when not being employed for lining up a golf shot.

These and other objects and advantages of the invention will become more apparent from the following specification and claims when taken in conjunction with the drawings, in which:

FIG. 1 is a top plan view of the golf sight, partially in cross-section, attached to the toe of a golfer's shoe which is shown in phantom lines;

FIG. 2 is a sectional view taken on line 2—2 of FIG. 1; and

FIG. 3 is a perspective view of the golf sight.

In order to illustrate a preferred embodiment of the present invention, the golf sight, generally indicated by the numeral 2, includes an elongated body portion 4 formed of a narrow strip of plastic material. One end of the body portion 4 is formed with converging side edge portions 6, which meet at 8 to provide a pointed end. A flat lug 10, formed integrally with the body portion 4, extends laterally outwardly from one side edge of the body portion substantially midway between the opposite ends thereof. The upper and lower surfaces of the lug 10 at the free outer end thereof, are tapered as at 12 and converge in the form of a tapered wedge portion 14 for attaching and frictionally holding the golf sight to the toe of the golfer's shoe 16 when inserted in the V-shaped recess 18 between the toe cap 20 and the sole 22 thereof.

While the body portion 4 of the golf sight is illustrated as being formed of narrow, flat, strip material, such as plastic or any other suitable self-sustaining material, it may also be formed round, square or of any other suitable configuration. Although the golf sight 2 is shown as being provided with a laterally extending lug 10, terminating at the lower end thereof in a wedge portion 14 for attaching the golf sight to the golfer's shoe, it will be readily apparent that the side edge of the body portion 4 could be beveled or tapered intermediate the opposite ends thereof to provide a wedge portion for attaching the golf sight to the toe of a golfer's shoe.

The present golf sight 2 may be readily detachably secured transversely of the toe 16 of a golfer's shoe by inserting the wedge portion 14 thereof into the V-shaped recess 18 between the top cap 20 and the sole 22 of the shoe when it is desired to line up a golf shot. The golf sight is attached to the toe of the shoe to indicate the line of travel of the golf ball and serves as a convenience reference sight for stroking the golf ball in the proper direction. As the golf sight protrudes a short distance beyond the toe portion of the golfer's shoe, it is much easier for the golfer to adjust the golf sight to point in the proper direction and to stroke the ball along the line indicated by the golf sight without turning his head than it is to line up the proposed line of travel of the golf ball with a hole which may be some distance away and which requires the golfer to turn his head. The golf sight is readily removed from the toe of the shoe and may be carried in the pocket of the golfer when not being employed for lining up a golf shot.

Such changes, modifications and alterations of this invention as may occur to those skilled in the art are to be considered within the purview of the present invention as fall within the spirit of the appended claims.

I claim:

1. A golf sight adapted to be attached to a golfer's shoe for use in golfing, comprising: an elongated body portion for indicating a line of sight; and a tapered wedge portion formed on one side edge of said body portion intermediate the opposite ends thereof for attaching said body portion to the toe of said shoe at the juncture of the shoe upper and sole.

2. A golf sight as defined in claim 1 in which at least one end of said body portion terminates in a point.

3. A golf sight as defined in claim 1 in which said wedge portion is formed on said body portion substantially midway between the opposite ends thereof.

4. A golf sight adapted to be attached to a golfer's shoe for use in golfing, comprising: an elongated body portion for indicating a line of sight; a short lug extending laterally outwardly from one side edge of said body portion intermediate the opposite ends thereof, the outer end of said lug terminating in a tapered wedge portion for attaching said body portion to the toe of said shoe at the junction of the shoe upper and sole.

5. A golf sight as defined in claim 4 in which one end of said body terminates in a point.

6. A golf sight as defined in claim 4 in which said lug extends laterally from said body portion substantially midway between the opposite ends thereof.

7. A golf sight adapted to be attached to a golfer's shoe for use in golfing, comprising: an elongated body portion formed of a flat strip of plastic material for indicating a line of sight; and a tapered wedge portion formed on one side edge of said strip intermediate the opposite ends thereof for attaching said body portion to the toe of said shoe at the juncture of the shoe upper and sole.

8. A golf sight adapted to be attached to a golfer's shoe for use in golfing, comprising: an elongated body portion formed of a flat strip of plastic material for indicating a line of sight; a short lug extending laterally outwardly from one side edge of said strip substantially midway between the opposite ends thereof, the outer end of said lug terminating in a tapered wedge portion for attaching body portion to the toe of said shoe at the junction of the shoe upper and sole.

References Cited by the Examiner

UNITED STATES PATENTS

1,484,064	2/24	Erickson	273—183
2,382,495	8/45	Malatesta	273—183
2,503,586	4/50	Miller	36—1

ISAAC LISANN, *Primary Examiner.*