HU000029605T2

(19) **HU**

(11) Lajstromszám: **E 029 605** (13) **T2**

MAGYARORSZÁG
Szellemi Tulajdon Nemzeti Hivatala

EURÓPAI SZABADALOM
SZÖVEGÉNEK FORDÍTÁSA

(21) Magyar ügyszám: **E 11 700820**
(22) A bejelentés napja: **2011. 01. 10.**

(96) Az európai bejelentés bejelentési száma:
EP 20110700820
(97) Az európai bejelentés közzétételi adatai:
EP 2521859 A2 **2011. 07. 14.**
(97) Az európai szabadalom megadásának meghirdetési adatai:
EP 2521859 B1 **2016. 04. 06.**

(51) Int. Cl.: **F03D 80/00** *(2006.01)*

(86) A nemzetközi (PCT) bejelentési szám:
PCT/EP 11/050202
(87) A nemzetközi közzétételi szám:
WO 11083156

(30) Elsőbbségi adatok:
102010000756 **2010. 01. 08.** **DE**

(72) Feltaláló(k):
RÖER, Jochen, 27777 Ganderkesee (DE)

(73) Jogosult(ak):
Wobben Properties GmbH, 26607 Aurich (DE)

(74) Képviselő:
Danubia Szabadalmi és Jogi Iroda Kft., Budapest

(54) **Szélturbina**

Az európai szabadalom ellen, megadásának az Európai Szabadalmi Közlönyben való meghirdetésétől számított kilenc hónapon belül, felszólalást lehet benyújtani az Európai Szabadalmi Hivatalnál. (Európai Szabadalmi Egyezmény 99. cikk(1))

A fordítást a szabadalmas az 1995. évi XXXIII. törvény 84/H. §-a szerint nyújtotta be. A fordítás tartalmi helyességét a Szellemi Tulajdon Nemzeti Hivatala nem vizsgálta.

WIND POWER PLANT

The present invention relates to a wind turbine having a pod having at least one fluid-cooled component and having a heat exchanger. A large number of such wind turbines are known from the prior art.

Furthermore, wind turbines with different pod forms are known. This includes substantially rectangular (box-like) pods, as well as cylindrical pods and pods which have a teardrop-like shape.

Since a heat exchanger, in order to be able to perform its function, has to be able to discharge the heat intended to be discharged to the environment, it is conventional for it to be arranged on the upper side of the pod in wind turbines. This occurs, for example, when erecting a wind turbine on the construction site so that the heat exchanger which is arranged on the pod does not make transport and handling of the pod more difficult or cannot become damaged. Therefore, the heat exchanger is generally mounted at the construction site during the erection of the wind turbine. In this instance, however, there may be an extremely wide variety of assembly errors which impair the correct function of the heat exchanger.

WO 2009/115100 A1 sets out a wind turbine having a pod and a fluid-cooled component and a heat exchanger.

DE 10 2007 042 338 A1 sets out a wind turbine having a heat exchanger system and a pod having a fluid-cooled component.

DE 102 33 947 A1 sets out a wind turbine having a pod and having at least one fluid-cooled component.

An object of the present invention is therefore to simplify transport and construction of a wind turbine having a heat exchanger and thus to overcome or at least reduce sources of error.

This is implemented in a wind turbine of the type mentioned in the introduction according to the invention by integrating the heat exchanger in the outer contour of the pod.

The object of the invention is achieved with a wind turbine according to claim 1.

Consequently, a wind turbine having a pod having at least one fluid-cooled component and a heat exchanger is provided. The heat exchanger is in this instance integrated in the outer contour of the pod. The heat exchanger is arranged on a carrier and the carrier is constructed as a separate pod component.

According to an aspect of the present invention, the heat exchanger has at least one ribbed pipe.

According to another aspect of the present invention, the heat exchanger is constructed from a ribbed pipe which is wound at least partially continuously.

According to another aspect of the present invention, the heat exchanger has a plurality of ribbed pipes which are arranged in parallel.

According to another aspect of the present invention, the carrier is constructed as a continuous recess in the contour of the pod.

According to another aspect of the present invention, the wind turbine has in the direction of a longitudinal axis of the pod a holding-down member which retains the ribbed pipe in its installation position.

According to another aspect of the present invention, the wind turbine has a ventilator which is arranged in such a manner that the air which is drawn in thereby flows around the heat exchanger.

In this instance, the present invention is based on the recognition that, as a result, no significant changes are required during transport and handling of the pod but, at the same time, the heat exchanger is also installed in the factory when the pod is assembled and can be tested for correct function. This leads to a simplification during transport and construction of the wind turbine and at the same time eliminates potential sources of error.

In a preferred embodiment, the heat exchanger is formed by at least one ribbed pipe. Such a ribbed pipe may be bent in such a simple manner that it follows the contour of the pod and can therefore be well-adapted to the pod contour.

In a preferred embodiment, the heat exchanger is formed by at least one ribbed pipe. Such a ribbed pipe may be bent in such a simple manner that it follows the contour of the pod and can therefore be well-adapted to the pod contour.

A high level of reliability is produced when the heat exchanger is formed by a continuously wound ribbed pipe since connection locations and consequently possible error locations at which, for example, leakages may occur, are then dispensed with.

In order to provide sufficient cooling power, the heat exchanger may also be formed by a plurality of ribbed pipes which are arranged in parallel so that there is produced a larger available cross-section in which the cooling fluid can be cooled.

In a particularly preferred manner, the heat exchanger is arranged on a carrier. This heat exchanger can thereby be prefabricated as one structural unit and fitted to the pod as an attachment piece. It is thus possible to carry out an examination of the function, for example, already prior to fitting to the pod so that, when the pod is assembled, it is ensured that a correctly operating heat exchanger is provided.

In order to retain the ribbed pipe or the ribbed pipes of the heat exchanger in the installation position thereof provided, there may be provided holding-down members distributed over the periphery of the heat exchanger and arranged substantially in the direction of the longitudinal axis of the pod.

In a preferred development of the invention, there is provided a ventilator which is arranged in such a manner that the air drawn in by it flows around the heat exchanger. An active heat exchanger and a defined cooling action of the heat exchanger are thereby produced.

A preferred embodiment of the invention is illustrated in the Figures, in which:

Figure 1 is a simplified illustration of a wind turbine;

Figure 2 shows an enlarged illustration of the pod of the wind turbine in Figure 1;

Figure 3 is a side view of a heat exchanger according to the invention as an attachment piece;

Figure 4 is a plan view of a heat exchanger according to the invention; and

Figure 5 is a perspective view of the heat exchanger with the flow path of the cooling air drawn in by the ventilator.

Figure 1 is a highly simplified illustration of a wind turbine 10. The tower 12 carries the pod 16 (alternatively, the term machine housing can also be used for the pod). The pod 16 is supported via an azimuth bearing (not illustrated) on a head of the tower 12 so that, by means of azimuth drives (which are also not illustrated), a wind direction tracking can be implemented. The transition between the pod 16 and tower 12 is covered by means of a pod apron 14 and thus protected against the influences of weather.

The pod 16 also contains the hub (also not illustrated) to which the rotor blades 24 are fitted. As a result of the rotor blades 24, the hub is caused to rotate (with the front portion of the pod 16). This rotational movement is transmitted to the rotor of the generator so that the wind turbine 10 produces electrical energy when the wind speed is sufficient.

Figure 2 is a more detailed illustration of the pod 16 of the wind turbine of Figure 1. The pod has a pod apron 14 which covers the transition from the pod 16 to the tower (not illustrated in this Figure). The pod 16 has a front pod portion 18 and a rear pod portion 22. The generator 20 may be located between these two pod portions. This generator 20 may optionally be constructed as a ring generator.

On the front pod portion 18, rotor blade domes 26 with blade extensions may be provided. In these rotor blade domes 26, the rotor blade roots of the rotor blades (not illustrated in this Figure) may be guided and secured to the rotor hub which transmits the rotation via a gear or also directly without a gear to the rotor as the rotating portion of the generator 20 (not illustrated in this Figure).

The electrical energy which is produced when there is sufficient wind speed is produced in the generator 20 and then depending on the concept of the wind turbine supplied via a transformer (not illustrated), for example, directly to the network or converted via rectifiers (also not illustrated) into a direct current and then supplied again via inverters at a suitable frequency and phase position to the network. A portion of these components described may be accommodated in the pod 16. In any case, however, depending on the power produced in the generator 20, there are produced heat losses which have to be discharged by means of cooling. This cooling may be an air cooling; however, it may also use a cooling fluid, such as, for example, water. Particularly with a high thermal load, an air cooling operation may not be sufficient and a fluid cooling may be required. Accordingly, the generator 20 may have a generator cooling connection 30 from which a connection 32 is guided as far as the heat exchanger 28 at one side of the pod (on the right-hand side in the Figure). The cooling fluid flows through the generator cooling connection 30, the connection 32 and through the heat exchanger 28. The heat exchanger 28 is in turn subjected to the air flow and has a sufficiently large surface to reliably carry out the required heat discharge so that the accordingly cooled cooling fluid can be supplied to the generator again in order to further reliably discharge the heat losses.

The heat exchanger 28, which is constructed in the present example from ribbed pipes 34, is inserted into or attached to the contour of the pod 16 so that the flow-promoting shape of the pod 16 is not changed in a disadvantageous manner by the heat exchanger 28. That is to say, the heat exchanger consequently replaces a portion of the pod and is adapted to the shape thereof so that the original shape of the pod is retained in order to obtain the shape which is as favourable as possible in terms of flow. The heat exchanger may in this instance be provided at the end of the pod facing the rotor 18 and be constructed in the manner of a dome. Alternatively or additionally, the heat exchanger may be constructed to be at least partially oval or elliptical in cross-section. Alternatively, the heat exchanger may be constructed in a cap-like manner. In this manner, adequate cooling of the cooling fluid is produced using the advantageous shape of the pod 16. Furthermore, the heat exchanger may have an elliptical outer contour.

Figure 3 shows a heat exchanger 28 according to the invention as a separate attachment piece. This heat exchanger according to the invention has ribbed pipes 34 which are wound on a carrier in such a manner that the outer contour is a substantially accurately shaped continuation of the pod contour, that is to say, the contour of the heat exchanger is oval (in cross-section), dome-shaped or cap-shaped. So that the ribbed pipes 34

remain in their position, there are provided holding-down members 36 which retain the ribbed pipes 34 in the predetermined position. In the flow direction downstream of the ribbed pipes 34, there may be arranged a ventilator 38 which draws in air in such a manner that it flows over the ribbed pipes 34 and consequently the excessive heat can be discharged.

Whilst in Figure 3 a side view of an exemplary embodiment of a heat exchanger according to the invention is illustrated, Figure 4 shows a rear view, that is to say, a view of a heat exchanger 28, as illustrated from the rear side of the pod. In this instance, however, the pod, as in Figure 3, is not also illustrated. In this Figure, the ribbed pipes 34, the holding-down members 36 and the ventilator 38 can be clearly seen. In this Figure, it is further also possible to clearly see a connection box 40 to which all the ribbed pipes 34 are connected. As a result of this connection box 40, the cooling fluid can flow simultaneously through all the ribbed pipes 34 so that a sufficiently large flow cross-section is produced in order to discharge the required quantity of heat via the heat exchanger 28 to the ambient air. To this end, the connection box 40 is connected by means of a connection (not illustrated in this instance) to the components to be cooled in the pod of the wind turbine.

A slightly modified embodiment of the heat exchanger 28 according to the invention is illustrated in Figure 5. This Figure is a perspective view, again without the pod of the wind turbine. From the connection box 40, the ribbed pipes 34 extend, as already described above, so that the cooling fluid can flow through them at the same time in order to be able to produce the required cooling power. The ventilator 38 is in turn arranged at the end of the heat exchanger 28 and is provided with a cover 44, which enables better guiding of the air flow 42.

If the ventilator 38 is operated, it brings about a flow of the ambient air over the surface of the ribbed pipes 34 in the direction indicated by arrows 42 so that, with this heat exchanger 28 according to the invention, an active cooling can be brought about in order to discharge the waste heat to the ambient air.

Since the heat exchanger according to the invention fits into the outer pod contour, the outer appearance of the wind turbine is also at most influenced slightly, but is substantially retained. Accordingly, the flow relationships on the pod are also substantially retained and at the same time sufficient cooling power of the heat exchanger 28 is produced.

SZÉLTURBINA

Szabadalmi igénypontok

1. Szélturbina, melynek folyadékkal hűtött legalább egy alkotóelemmel és hőcserélővel (28) rendelkező gondolája (16) van, ahol a hőcserélő (28) a gondola (16) külső kontúrjába van integrálva,
azzal jellemezve, hogy
a hőcserélő (28) tartón van elrendezve, és a tartó a gondola különálló alkatrészeként van kiképezve.

2. Az 1. igénypont szerinti szélturbina, ahol a hőcserélőnek (28) legalább egy bordáscsöve (34) van.

3. Az előző igénypontok bármelyike szerinti szélturbina, ahol a hőcserélőnek (28) legalább részben folytonosan feltekert bordáscsöve (34) van.

4. Az 1. vagy a 2. igénypont szerinti szélturbina, ahol a hőcserélőnek (28) több párhuzamosan elrendezett bordáscsöve (34) van.

5. A 2-4. igénypontok bármelyike szerinti szélturbina, melynek a gondola hossztengelye irányában elrendezett, a bordáscsövet (34), illetve bordáscsöveket (34) beépített helyzetükben megtartó leszorítóeszközei (36) vannak.

6. Az előző igénypontok bármelyike szerinti szélturbina, melynek olyan módon elrendezett ventilátora (38) is van, hogy a ventilátor által beszívott levegő (42) a hőcserélőt (28) körüláramolja.

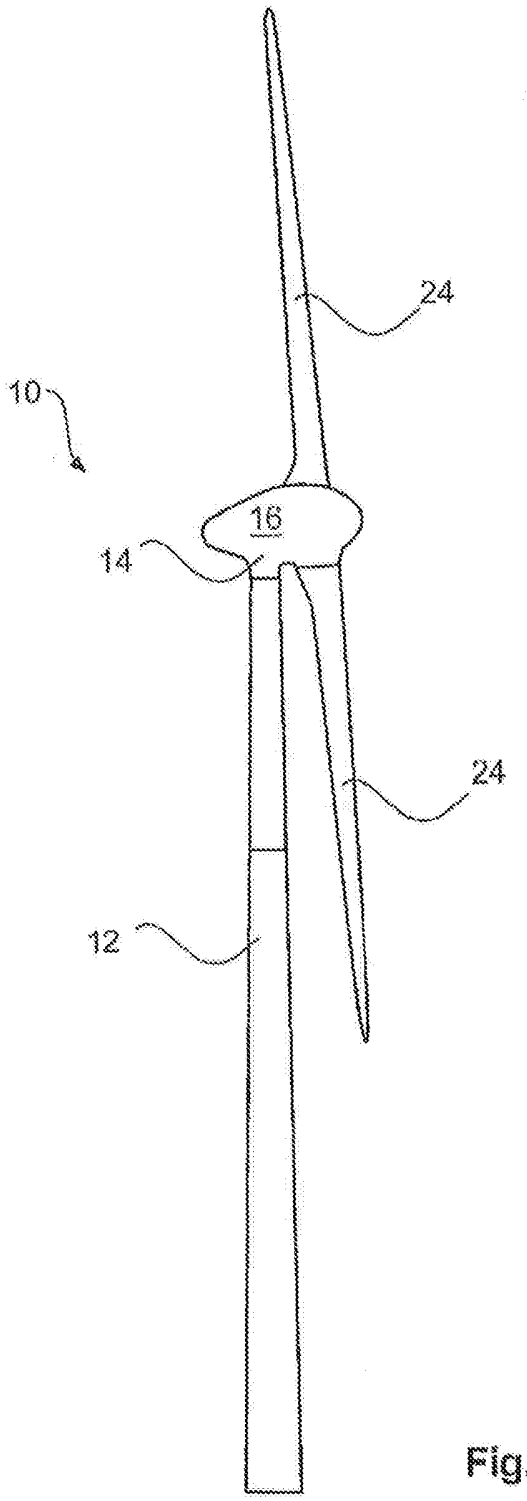

Fig. 1

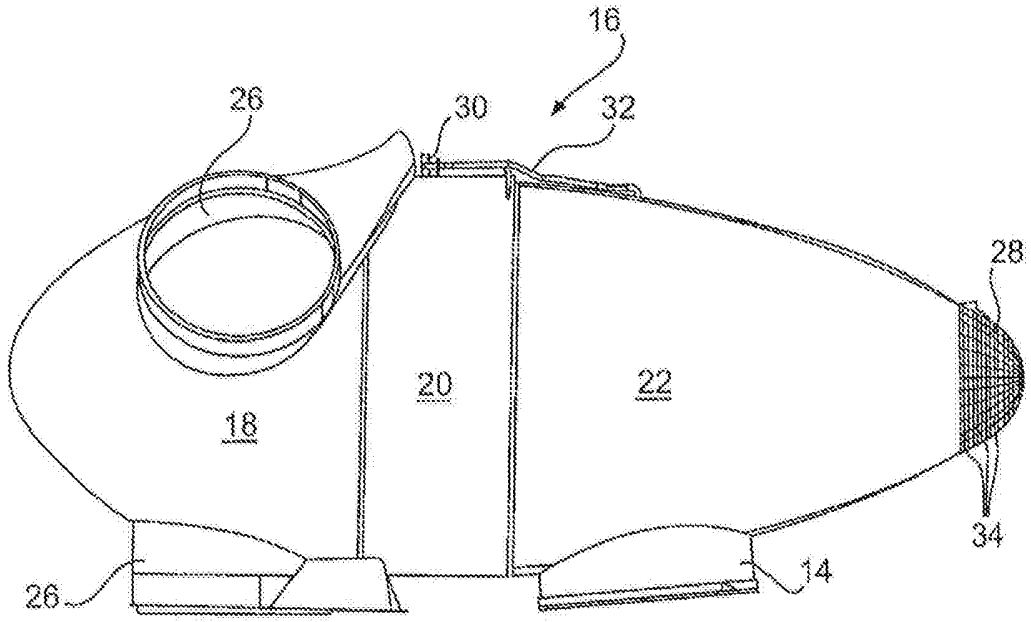

Fig. 2

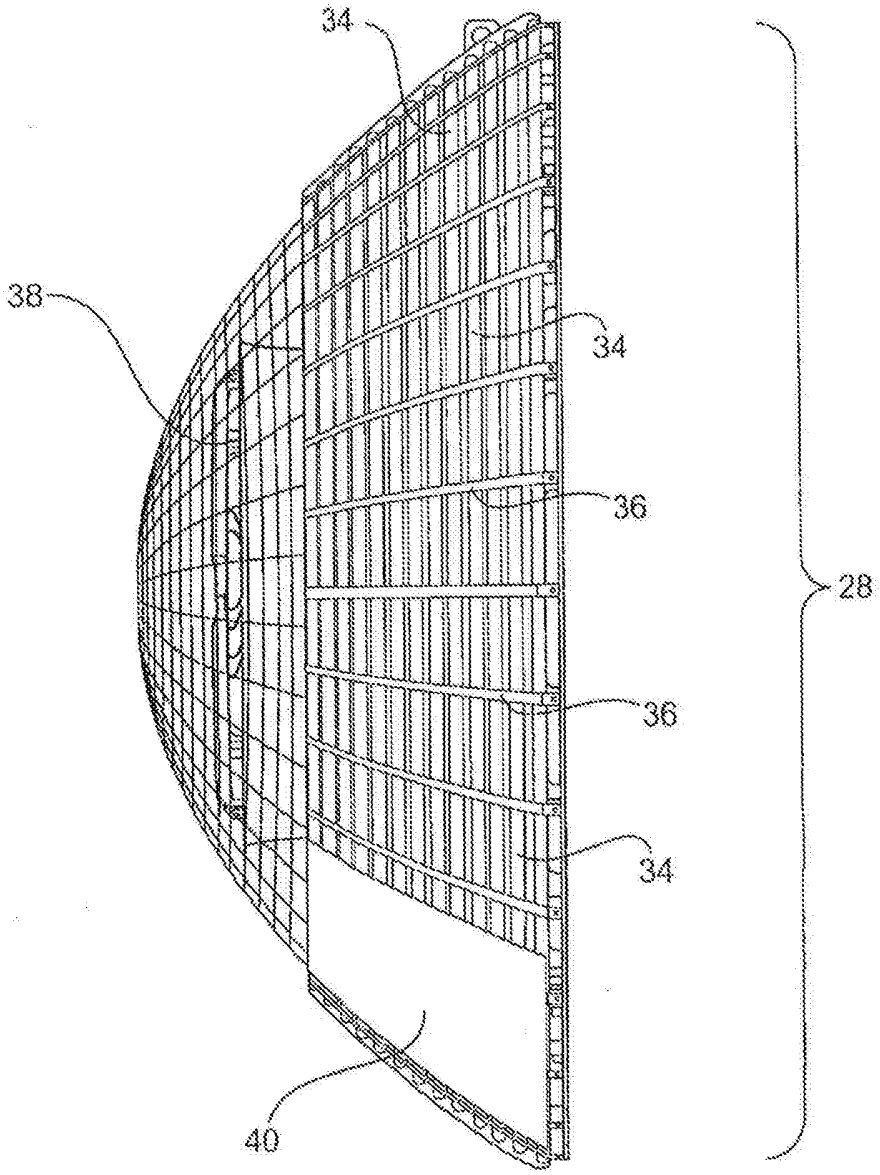

Fig. 3

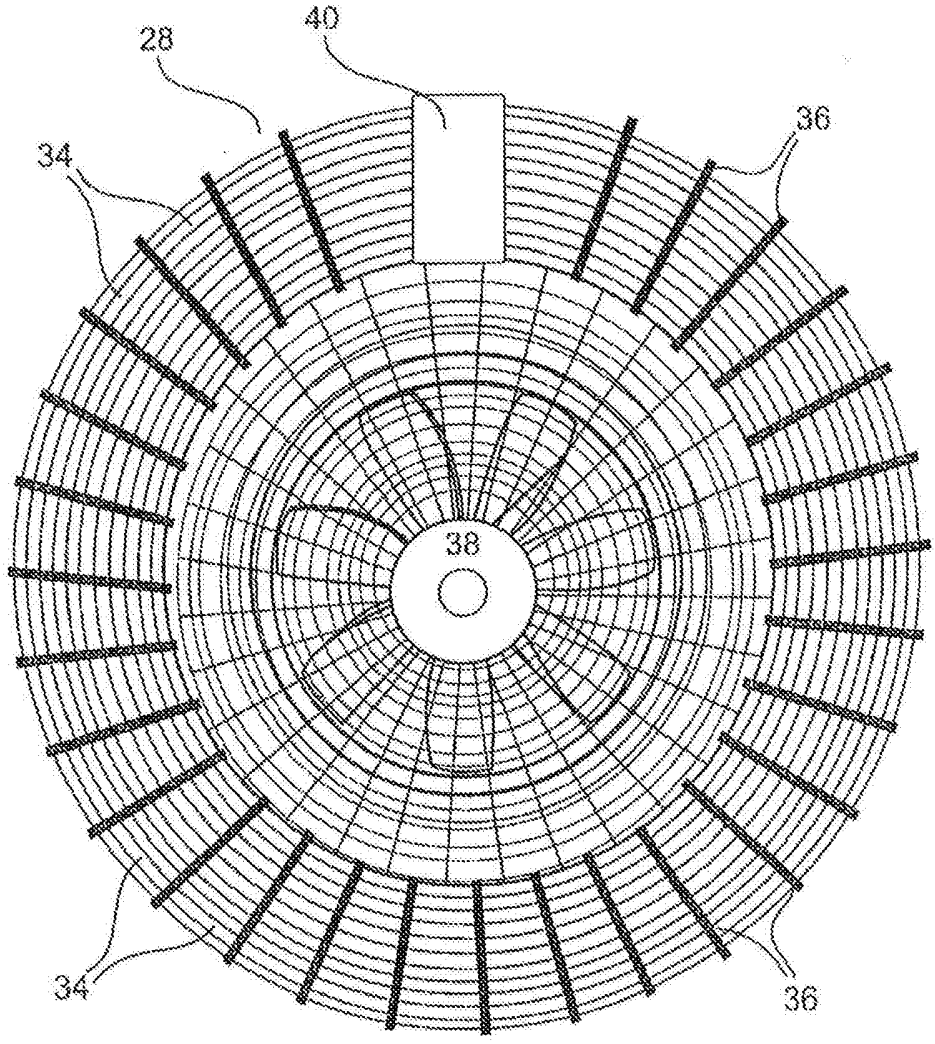

Fig. 4

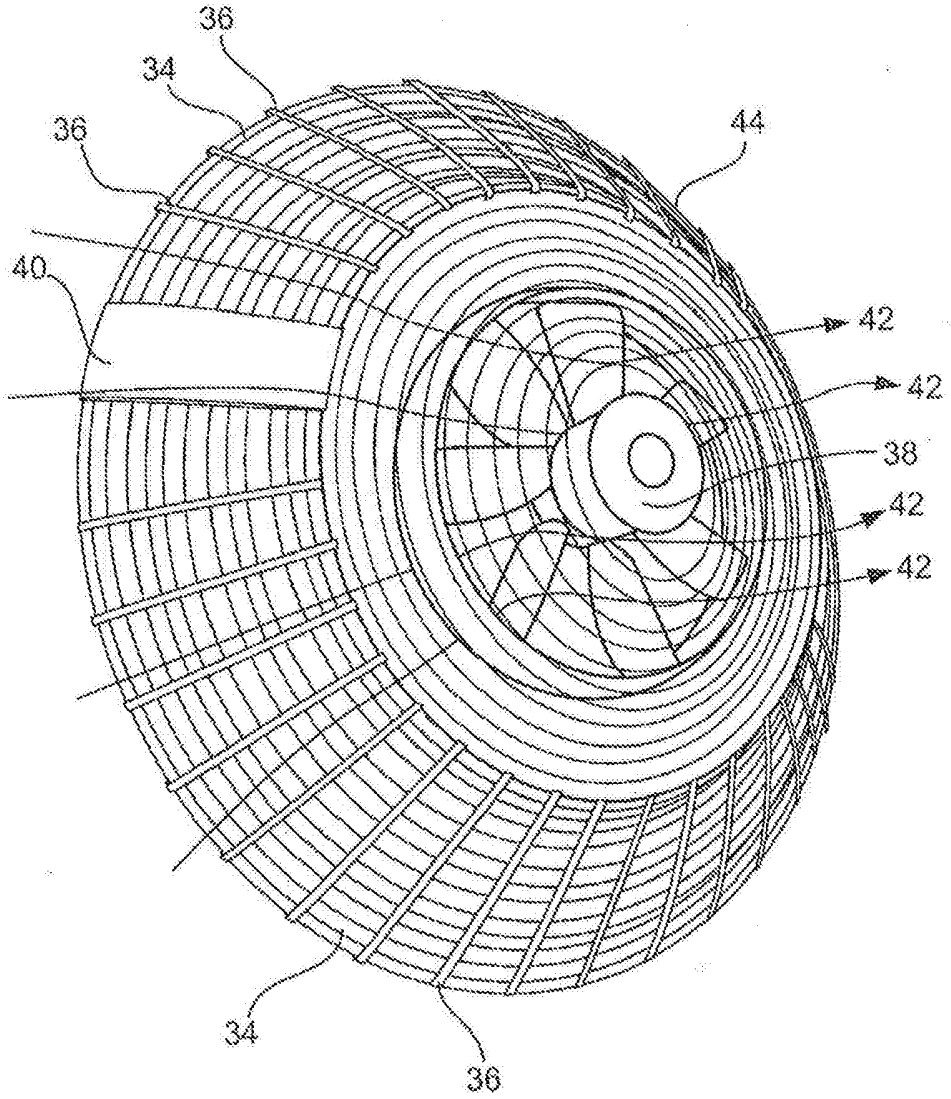

Fig. 5