(19) Europäisches Patentamt
European Patent Office
Office européen des brevets

(11) EP 0 481 686 B1

(12) **EUROPEAN PATENT SPECIFICATION**

(45) Date of publication and mention of the grant of the patent:
24.04.1996 Bulletin 1996/17

(51) Int Cl.[6]: **D06B 23/30**

(21) Application number: **91309352.2**

(22) Date of filing: **10.10.1991**

(54) **Color changing system for spray dyeing**

Mittel zum Verändern des Färbebades in einer Färbedüseneinrichtung

Moyens permettant de changer la couleur de teinture d'une buse

(84) Designated Contracting States:
DE ES FR GB IT

(30) Priority: **13.10.1990 JP 274707/90**

(43) Date of publication of application:
22.04.1992 Bulletin 1992/17

(73) Proprietor: **YKK CORPORATION**
Chiyoda-ku, Tokyo (JP)

(72) Inventor: **Yamakita, Yoshimichi**
Uozu-shi, Toyama-ken (JP)

(74) Representative: **White, Martin David et al**
MARKS & CLERK,
57/60 Lincoln's Inn Fields
London WC2A 3LS (GB)

(56) References cited:
EP-A- 0 353 963
EP-A- 0 398 126
GB-A- 2 083 412

Note: Within nine months from the publication of the mention of the grant of the European patent, any person may give notice to the European Patent Office of opposition to the European patent granted. Notice of opposition shall be filed in a written reasoned statement. It shall not be deemed to have been filed until the opposition fee has been paid. (Art. 99(1) European Patent Convention).

EP 0 481 686 B1

Printed by Jouve, 75001 PARIS (FR)

Description

1. Field of the Invention:

This invention relates to a spray dyeing process for continuously dyeing a long strip of fabric (hereinafter called a "fabric strip") such as a slide fastener chain, slide fastener tape, surface fastener, ribbon, and the like by spraying dye liquid thereat, and more particularly to a system for changing dye colors by washing spray nozzles without interrupting the spray dyeing process.

2. Description of the Related Art:

This invention relates to improvement of the invention disclosed in Japanese Patent Laid-Open Publication 2-307960.

Heretofore the process of spray dyeing is well-known, in which dye liquid is sprayed onto a fabric strip. This spray dyeing is suitable to produce a good assortment of fabric strips in a small amount. The invention disclosed in the above Japanese Patent Laid-Open Publication relates to a method of washing spray nozzles for such spray dyeing, in which a pair of spraying units are used. When one of the spraying units is in operation, the nozzle of the other spraying unit is displaced from the fabric strip, so that the nozzle of the other spraying can be rinsed by washing liquid supplied to the nozzle. Thus the fabric strip is sectionally dyed in different colors without interrupting the spray dyeing process.

With this spray dyeing, the washing liquid is supplied to the nozzles to rinse them, then being discharged in the air. The washing liquid mixed with the dye liquid floats around the fabric strip, which might be stained while it is being conveyed.

EP-A-0 398 126, a document according to Art. 54 (3) EPC, discloses a color-changing system for spray-dyeing, comprising:-

at least first and second spraying units;
each said spraying unit including a feed pipe, a movable pipe, at least one nozzle and selectively switchable supply means to supply said feed pipe selectively either with dye liquid or washing liquid, said movable pipe being connected to one end of said feed pipe to receive the dye liquid or washing liquid therefrom, said at least one nozzle being connected to said movable pipe to receive the dye liquid or washing liquid therefrom, said movable pipe being movable so as to move said at least one nozzle selectively into and out of a spraying position, and moving means for selectively moving said movable pipe, said supply means being interconnected with said moving means so that said feed pipe, said movable pipe and said at least one nozzle are supplied with the dye liquid, for a spraying step, when said at least one nozzle is in said spraying position, and with the washing liquid, to prepare for a subsequent spraying step, when said at least one nozzle is out of said spraying position;
said first and second spraying units being interconnected so that, when said at least one nozzle of said first spraying unit is in said spraying position, said at least one nozzle of said second spraying unit is out of said spraying position, and so that, when said at least one nozzle of said second spraying unit is in said spraying position, said at least one nozzle of said first spraying unit is out of said spraying position.

However, the nozzles of the spraying units of EP-A-0 398 126 tend sometimes not to be properly washed, because they are not immersed in washing liquid.

Moreover, neither of EP-A-0 353 963 and GB-A-2 083 412 suggests immersion of spra in unit nozzles in washing liquid.

SUMMARY OF THE INVENTION

It is an object of this invention to provide a color changing system for the spray dyeing, in which the nozzles can be completely rinsed without staining the fabric strip and without interrupting the spray dyeing process.

According to this invention, there is provided a color changing system for spray dyeing, according to claim 1.

BRIEF DESCRIPTION OF THE DRAWINGS

FIG. 1 is a schematic perspective view of a color changing system according to an embodiment of this invention;
FIG. 2 is a cross-sectional view of the color changing system mounted in a dyeing chamber;
FIG. 3 is a front view showing a modified arrangement of nozzles; and
FIG. 4 is front view showing a still further modified arrangement of nozzles.

DETAILED DESCRIPTION

One embodiment of the invention will be now described , with reference to the accompanying drawings.

A color changing system comprises a pair of dye spraying units 1, 1, and a pair of wash tubs 2, 2.

The two dye spraying units 1, 1 are identical.

When one of the spraying units 1, 1 is in operation, the other is being washed prior to spraying dye liquid of a different color. The spraying units 1, 1 are alternately operated to spray-dye the fabric strip without interruption. Therefore, operation of only one of the units is described hereinafter.

A spraying unit 1 includes a pipe 3 for feeding either the dye or washing liquid, a movable pipe 4 communicating with the feed pipe 3, and nozzles 5 attached to one end of the movable pipe 4. The feed pipe 3 serves

to supply the dye liquid and washing liquid to the nozzles 5. One end of the feed pipe 3 is connected to a dye liquid tank 7 and a washing liquid tank 8 via a select valve 6 as indicated by dot-and-dash lines in FIG. 1.

The movable pipe 4 is in the shape of a letter "T", and is movably connected to an other end of the feed pipe 3. The nozzles 5 are attached to an end of a branch at the central portion of the movable pipe 4. The other end of the movable pipe 4 terminates in a gear 9, which is in engagement with a gear 11 connected to a drive shaft 10. The drive shaft 10 is set in motion by a non-illustrated motor. The gears 9, 11 turn forwards and backwards according to the movement of the drive shaft 10, thereby moving the nozzles 5 upwards and downwards. The nozzles 5 are reciprocated between a spraying position and the washing tub 2. In the spraying position, the nozzles 5 confront a fabric strip 17, and spray dye liquid onto said fabric strip 17. When the nozzles 5 are in the washing tub 2, they discharge washing liquid into the washing tub 2.

In the spraying position, the nozzles 5 are arranged to confront the center line of the fabric strip which is continuously guided downwardly so that the dye liquid can be divergently and transversely sprayed onto the fabric strip 17. In the embodiment of FIG. 1, the nozzles 5 are vertically aligned.

Although two nozzles 5 are used in the embodiment shown in FIG. 1, it is not necessary to have two nozzles. One or up to four nozzles may be used. The nozzles 5 may be arranged to spray the dye liquid onto either the front surface of the fabric strip 17 as shown in FIG. 1 or onto both the front and rear surfaces of the fabric strip 17 as shown in FIG. 2.

FIG. 3 shows a modified arrangement of the nozzles of a pair of spraying units. Specifically, in the spraying position the nozzles 5 are placed so as to obliquely face the center line of the fabric strip 17, thereby enabling the nozzles to be moved promptly without interfering each other.

The nozzle pairs of the two spraying units may be alternatively arranged as shown in FIG. 4. In this case, the nozzle pairs should be firstly withdrawn as indicated by straight arrows and then moved as indicated by oblique arrows.

The pair of washing tubs 2 are symmetrically arranged under the spraying units 1, 1 and the movable pipes 4, 4. The nozzles of a spraying unit 1 are moved downwardly into the washing tub 2 to be steeped and washed therein. Specifically, the outer surface of the nozzles 5 is washed in the washing tub 2, and the inner surfaces of the nozzles 5, the feed pipe 3 and the movable pipe 4 are rinsed by washing liquid supplied via the select valve 6. The used washing liquid is received in the washing tub 2. The washing tub 2 should be always filled with the washing liquid to sufficiently cover the nozzles 5 and not to be scattered when washing the nozzles 5. The amount of the washing liquid in the washing tub is controlled by a feed pipe 12 and a drainpipe 13.

In the embodiment of FIG. 1, two washing tubs 2 are respectively used for the pair of the spraying units 1, 1. However, it is also possible to use one large washing tub for both the spraying units 1, 1.

In the embodiment shown in FIG. 2, the nozzles 5 and movable pipes 4 of the spraying units and the washing tubs 2 are mounted in a dyeing chamber 14 to prevent dye mist from being dispersed outwardly. The dyeing chamber 14 has a pair of lids 15, 15, which are opened and closed by a pair of liquid pressure cylinders 16, 16. The lids 15, 15 are kept closed during the spray dyeing, being opened to suck the residual dye mist from the dye chamber 14 when different dye liquid is to be used subsequently. Thus, the dyed fabric strip 17 can be kept from being stained.

According to this invention, a pair of the spray units are associated with at least one washing tub, so that when one of the spray units is in operation, the other spray unit is standby with its nozzle(s) steeped in the washing tub(s). To dye the fabric strip in a different color, the spraying unit in operation is lowered while the nozzle (s) of the standby spraying unit is/are raised to the spraying position. Then new dye liquid is sprayed onto the fabric strip through the nozzle(s) of the other spray unit.

Not only the inner surfaces of the feed and movable pipe but also the nozzle pairs can be completely washed in the washing tubs. The washing liquid containing the dye liquid is kept in the washing tub, so that the dyed fabric strip can be dyed as desired without being stained. Units outside the spray units will not be also stained. The spray-dyed fabric strip is then color-developed by steam, color-fixed, washed, dried, and brought forward as a colored product.

At least a pair of the spraying units should be used according to this invention. Three or more spray units may be installed to perform dyeing and washing alternately. A plurality of long strips of fabric such as slide fastener tapes may be guided in rows to be spray-dyed simultaneously.

With this invention, the spray dyeing is performed by a pair of the spraying units and at least a washing tub. The spraying units are alternately used so that when one of them is in operation, the other unit is standby in the washing tub where the outer and inner surfaces of the feed and movable pipes as well as the nozzle(s) are washed. The liquid for washing these components is kept in the washing tub not to be dispersed in the air as mist. Therefore, the dyed fabric strip will not be stained, and new dye liquid can be sprayed via the washed nozzles to dye the fabric strip clearly and beautifully.

Claims

1. A color-changing system for spray-dyeing, comprising:-

   at least first and second spraying units (1);

each said spraying unit (1) including a feed pipe (3), a movable pipe (4), at least one nozzle (5) and selectively switchable supply means (6, 7, 8) to supply said feed pipe (3) selectively either with dye liquid or washing liquid, said movable pipe (4) being connected to one end of said feed pipe (3) to receive the dye liquid or washing liquid therefrom, said at least one nozzle (5) being connected to said movable pipe (4) to receive the dye liquid or washing liquid therefrom, said movable pipe (4) being movable so as to move said at least one nozzle (5) selectively into and out of a spraying position, and moving means (9, 10, 11) for selectively moving said movable pipe (4), said supply means (6, 7, 8) being interconnected with said moving means (9, 10, 11) so that said feed pipe (3), said movable pipe (4) and said at least one nozzle (5) are supplied with the dye liquid, for a spraying step, when said at least one nozzle (5) is in said spraying position, and with the washing liquid, to prepare for a subsequent spraying step, when said at least one nozzle (5) is out of said spraying position;
said first and second spraying units (1) being interconnected so that, when said at least one nozzle (5) of said first spraying unit (1) is in said spraying position, said at least one nozzle (5) of said second spraying unit (1) is out of said spraying position, and so that, when said at least one nozzle (5) of said second spraying unit (1) is in said spraying position, said at least one nozzle (5) of said first spraying unit (1) is out of said spraying position;
said color-changing system for spray-dyeing having at least one washing tub (2) filled with washing liquid, and said movable pipe (4) of each of said first and second spraying units (1) being movable so as to move said at least one nozzle (5) connected thereto out of the spraying position into the said, or a said, washing tub (2) filled with washing liquid, so as to immerse said at least one nozzle (5) completely in the washing liquid.

2. A color-changing system according to claim 1, adapted for spray-dyeing a fabric strip, wherein each said spraying unit (1) comprises at least two said nozzles (5), said at least two nozzles (5) being disposed so that when a spraying unit (1) is in said spraying position dye liquid is simultaneously sprayed onto said front surface and onto a back surface of said fabric strip (17).

3. A colour changing system according to claim 1 or 2 and wherein said washing tub(s) (2) and said spraying units (1) are mounted in a dyeing chamber (14), said dyeing chamber comprising a pair of closable lids (15).

4. A method of spray dyeing a fabric strip (17) using a colour changing system according to any preceding claim, said method comprising the steps of: -

a) moving the nozzle(s) (5) of a first spraying unit (1) from said washing tub(s) 2 to a first spraying position;

b) spraying dye liquid of a first colour onto said fabric strip (17);

c) moving the nozzle(s) 5 of said first spraying unit 1 into said washing tub(s) (2), and moving the nozzle(s) 5 of a second spraying unit (1) from said washing tub(s) 2 into a second spraying position; and

d) spraying dye liquid of a second colour onto said fabric strip (17) from said nozzle(s) 5 of said second spraying unit 1, while washing said nozzle(s) of said first spraying unit 1with washing liquid.

Patentansprüche

1. Farbwechselsystem für das Sprühfärben, aufweisend:

zumindest erste und zweite Sprüheinheken (1); jede Sprüheinheit (1) beinhaltend ein Zuführrohr (3), ein bewegliches Rohr (4), mindestens eine Düse (5), und wahlweise schaltbare Versorgungseinrichtungen (6, 7, 8), um das Zuführrohr (3) wahlweise entweder mit Färbeflüsügkek oder Waschflüssigkeit zu versorgen, wobei das bewegliche Rohr (4) mit einem Ende des Zuführrohrs (3) verbunden ist, um die Färbeflüssigkeit oder Waschflüssigkeit von diesem zu empfangen, wobei die mindestens eine Düse (5) mit dem beweglichen Rohr (4) verbunden ist, um die Färbeflüssigkeit oder Waschflüssigkeit von diesem zu empfangen, das bewegliche Rohr (4) beweglich ist, um die mindestens eine Düse (5) wahlweise in eine Sprühposition oder aus dieser heraus zu bewegen, sowie Bewegungseinrichtungen (9, 10, 11) zum wahlweisen Bewegen des beweglichen Rohrs (4), wobei die Versorgungseinrichtungen (6, 7, 8) mit den Bewegungseinrichtungen (9, 10, 11) verbunden sind, so daß das Zuführrohr (3), das bewegliche Rohr (4) und die mindestens eine Düse (5) für einen Färbeschritt, wenn die mindestens eine Düse (5) sich in einer Sprühposition befindet, mit der Färbeflüsigkeit versorgt werden, und diese mit der Waschflü-

sigkeit versorgt werden, um sie für einen nachfolgenden Sprühschritt vorzubereiten, wenn die mindestens eine Düse (5) sich außerhalb der Sprühposition befindet;
wobei die ersten und zweiten Sprüheinheiten (1) so verbunden sind, daß, wenn sich die mindestens eine Düse (5) der ersten Sprüheinheit (1) in der Sprühposition befindet, sich die mindestens eine Düse (5) der zweiten Sprüheinheit (1) außerhalb der Sprühposition befindet, und so, daß, wenn sich die mindestens eine Düse (5) der zweiten Sprüheinheit (1) in der Sprühposition befindet, sich die mindestens eine Düse (5) der ersten Sprüheinheit (1) außerhalb der Sprühposition befindet;
und das Farbwechselsystem für das Sprühfärben mindestens eine mit Waschflüssigkeit gefüllte Waschwanne (2) beinhaltet, wobei das bewegliche Rohr (4) von jeder der ersten und zweiten Sprüheinheiten (1) beweglich ist, so daß die mindestens eine mit diesen verbundene Düse (5) aus der Sprühposition heraus in die, oder eine mit Waschflüssigkeit gefüllte Waschwanne (2) bewegt wird, so daß die mindestens eine Düse (5) vollständig in die Waschflüssigkeiteingetaucht wird.

2. Farbwechselsystem nach Anspruch 1, angepaßt für das Sprühfarben eines Textilstreifens, wobei jede der Sprüheinheiten (1) mindestens zwei Düsen (5) aufweist, und die mindestens zwei Düsen (5) so angeordnet sind, daß, wenn eine Sprüheinheit (1) in der Sprühposition ist, Färbeflüsigkeit gleichzeitig auf die Vorderseite und eine Rückseite des Textilstreifens (17) gesprüht wird.

3. Farbwechselsystem nach Anspruch 1 oder 2, wobei die Waschwanne(n) (2) und die Sprüheinheiten (1) in einer Färbekammer (14) angeordnet sind und die Färbekammer ein Paar verschließbarer Deckel (15) aufweist.

4. Verfahren zum Sprühfärben eines Textilstreifens (17) unter Verwendung des Farbwechselsystems nach einem der vorstehenden Ansprüche, wobei das Verfahren folgende Schritte aufweist:

a) Bewegen der Düse(n) (5) einer ersten Sprüheinheit (1) von der oder den Waschwanne(n) (2) weg in eine erste Sprühposition;
b) Sprühen von Färbeflüsigkeit einer ersten Farbe auf den Textilstreifen (17);
c) Bewegen der Düse(n) (5) der ersten Sprüheinheit (1) in die Waschwanne(n) (2), und Bewegen der Düse(n) (5) einer zweiten Sprüheinheit (1) von der oder den Waschwanne(n) (2) weg in eine zweite Sprühposition; und
d) Sprühen von Färbeflüsügkeit einer zweiten Farbe auf den Textilstreifen (17) von der oder den Düse(n) (5) der zweiten Sprüheinheit (1) aus, während die Düse(n) (5) der ersten Sprüheinheit (1) mit Waschflüssigkeit gewaschen werden.

Revendications

1. Dispositif de changement de couleur pour la teinture par projection, qui comprend :

- des première et seconde unités de projection (1) au moins,
- chaque unité de projection (1) comprenant une canalisation d'amenée (3), un tube mobile (4), au moins une buse (5) et des moyens d'alimentation (6, 7, 8) sélectivement commutables pour alimenter de façon sélective ladite canalisation d'amenée (3) soit en un liquide de teinture soit en un liquide de lavage, ledit tube mobile (4) étant raccordé à une extrémité de ladite canalisation d'amenée (3) pour en recevoir le liquide de teinture ou le liquide de lavage, ladite buse (5) au nombre d'au moins une étant raccordée audit tube mobile (4) pour en recevoir le liquide de teinture ou le liquide de lavage, ledit tube mobile (4) pouvant être déplacé pour sélectivement amener ladite buse (5) en une position de projection et l'en retirer, et des moyens de déplacement (9, 10, 11) pour déplacer sélectivement ledit tube mobile (4), lesdits moyens d'alimentation (6, 7, 8) étant interconnectés avec lesdits moyens de déplacement (9, 10, 11) de sorte que ladite canalisation d'amenée (3), ledit tube mobile (4) et ladite buse (5) au nombre d'au moins une sont alimentés en liquide de teinture, en vue d'une étape de projection, quand ladite buse (5) au nombre d'au moins une se trouve dans ladite position de projection et en liquide de lavage, pour préparer une étape de projection suivante, quand ladite buse (5) au nombre d'au moins une se trouve hors de ladite position de projection,
- lesdites première et seconde unités de projection (1) étant interconnectées pour que, quand ladite buse (5) au nombre d'au moins une de ladite première unité de projection (1) se trouve dans ladite position de projection, ladite buse (5) au nombre d'au moins une de ladite seconde unité de projection (1) se trouve hors de ladite position de projection et pour que, quand ladite buse (5) au nombre d'au moins une de ladite seconde unité de projection (1) se trouve dans ladite position de projection, ladite buse (5) au nombre d'au moins une de ladite première unité de projection (1) se trouve hors de ladite position de projection,

- ledit dispositif de changement de couleur pour la teinture par projection comprenant au moins un réservoir de lavage (2) rempli de liquide de lavage, ledit tube mobile (4) de chacune desdites première et seconde unités de projection (1) étant mobile de manière à déplacer ladite buse (5) au nombre d'au moins une qui lui est raccordée hors de la position de projection et l'amener dans ledit réservoir de lavage (2) rempli de liquide de lavage afin d'immerger totalement ladite buse (5) au nombre d'au moins une dans le liquide de lavage.

2. Dispositif de changement de couleur selon la revendication 1, adapté à la teinture par projection d'une bande d'étoffe, dans lequel chacune desdites unités de projection (1) comprend au moins deux buses (5), lesdites buses (5) au nombre d'au moins deux étant disposées de telle façon que lorsqu'une unité de projection (1) est dans ladite position de projection un liquide de teinture est projeté simultanément sur la face endroit et sur la face envers de ladite bande d'étoffe (17).

3. Dispositif de changement de couleur selon la revendication 1 ou 2, dans lequel ledit ou lesdits réservoir (s) de lavage (2) et lesdites unités de projection (1) sont installés dans une chambre de teinture (14), ladite chambre de teinture comprenant une paire de couvercles (15) pouvant être fermés.

4. Procédé de teinture d'une bande d'étoffe (17) par projection à l'aide d'un dispositif de changement de couleur selon l'une quelconque des précédentes revendications, ledit procédé comprenant les étapes consistant à :

a) déplacer la ou les buse(s) (5) d'une première unité de projection (1), dudit réservoir de lavage (2) à une première position de projection,
b) projeter un liquide de teinture d'une première couleur sur ladite bande d'étoffe (17),
c) déplacer la ou les buse(s) (5) de ladite première unité de projection (1) dans ledit réservoir de lavage (2) et déplacer la ou les buse(s) (5) d'une seconde unité de projection (1) dudit réservoir de lavage (2) à une seconde position de projection, et
d) projeter un liquide de teinture d'une seconde couleur sur ladite bande d'étoffe (17) depuis la ou les buse(s) (5) de ladite seconde unité de projection (1) tandis qu'on lave la ou les buse (s) (5) de ladite première unité de projection (1) avec un liquide de lavage.

FIG. 1

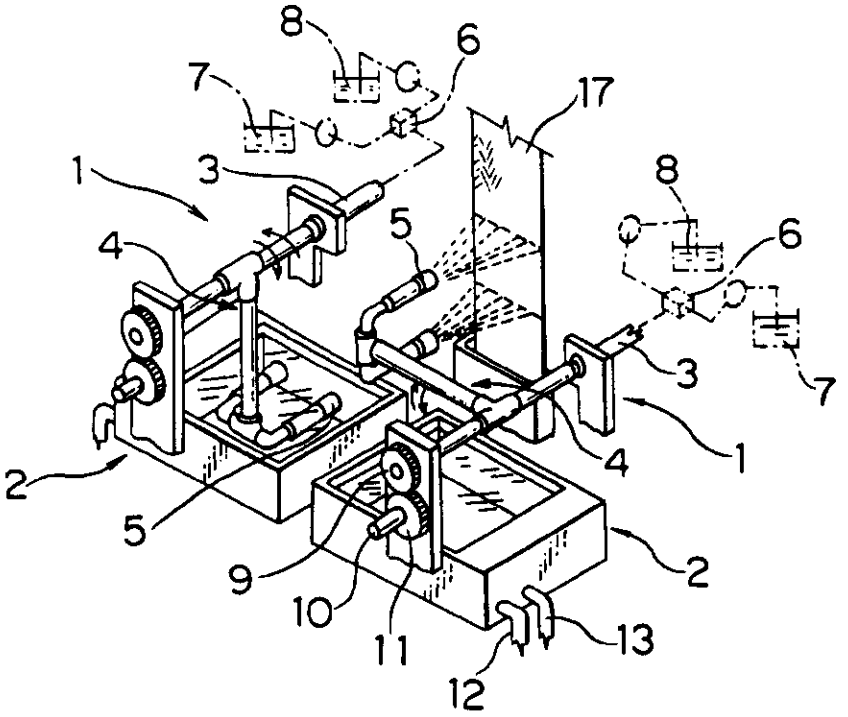

FIG. 2

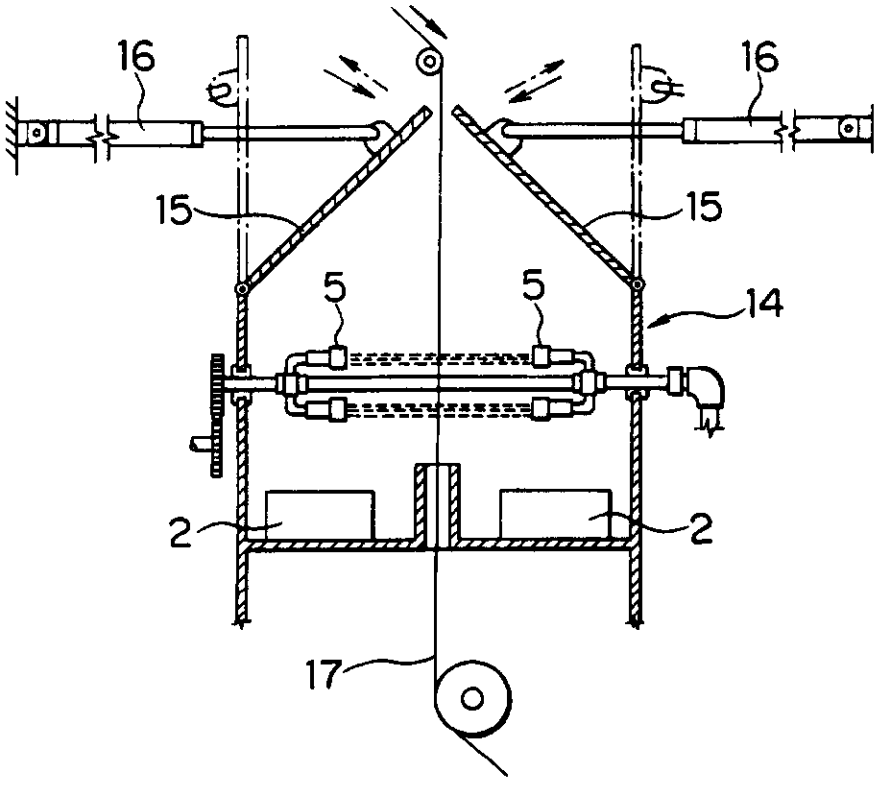

FIG. 3

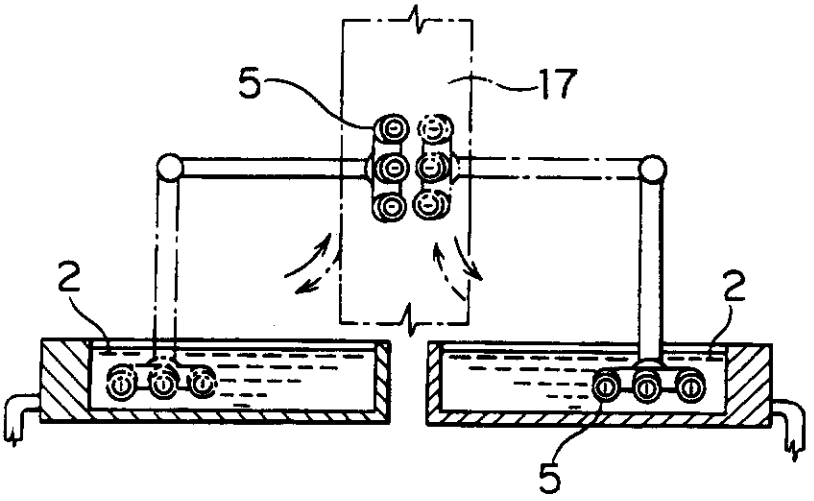

FIG. 4

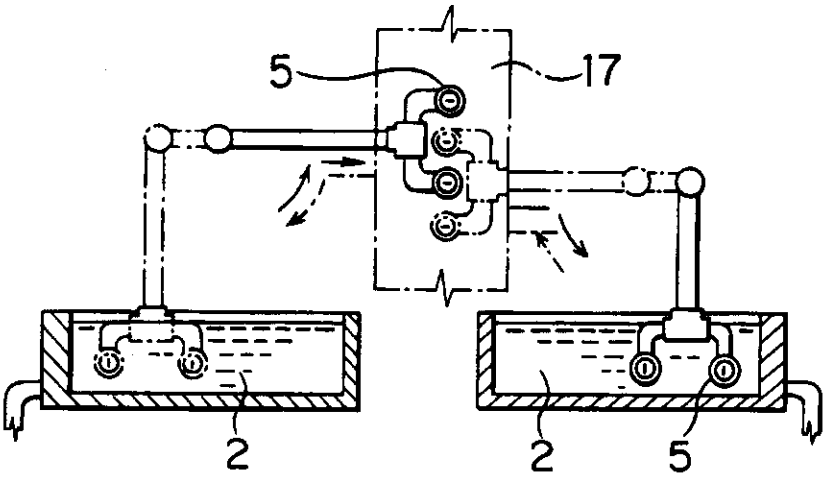

REGISTER ENTRY FOR EP0481686

European Application No EP91309352.2 filing date 10.10.1991

Priority claimed:
13.10.1990 in Japan - doc: 02274707

Designated States DE ES FR GB IT

Title COLOR CHANGING SYSTEM FOR SPRAY DYEING.

Applicant/Proprietor
YOSHIDA KOGYO K.K., No. 1 Kanda Izumi-cho Chiyoda-ku, Tokyo, Japan
[ADP No. 50269133001]

Inventor
YOSHIMICHI YAMAKITA, 2075, Ide, Uozu-shi, Toyama-ken, Japan
[ADP No. 57750275001]

Classified to
D06B

Address for Service
MARKS & CLERK, 57-60 Lincoln's Inn Fields, LONDON, WC2A 3LS, United Kingdom
[ADP No. 00000018001]

EPO Representative
MARTIN DAVID WHITE, MARKS & CLERK 57/60 Lincoln's Inn Fields, London WC2A 3LS, United Kingdom
[ADP No. 50847235001]

Publication No EP0481686 dated 22.04.1992
Publication in English

Examination requested 09.06.1992

Patent Granted with effect from 24.04.1996 (Section 25(1)) with title COLOR CHANGING SYSTEM FOR SPRAY DYEING

04.11.1994 Notification from EPO of change of Applicant/Proprietor details
from
YOSHIDA KOGYO K.K., No. 1 Kanda Izumi-cho Chiyoda-ku, Tokyo, Japan
[ADP No. 50269133001]

to
YKK CORPORATION, No. 1, Kanda Izumi-cho, Chiyoda-ku, Tokyo, Japan
[ADP No. 62492848001]

Entry Type 25.14 Staff ID. RD06 Auth ID. EPT

**** END OF REGISTER ENTRY ****

RENEWAL DETAILS

PUBLICATION NUMBER EP0481686

PROPRIETOR(S)

YKK CORPORATION, No. 1, Kanda Izumi-cho, Chiyoda-ku, Tokyo, Japan

DATE FILED 10.10.1991

DATE GRANTED 24.04.1996

DATE NEXT RENEWAL DUE 10.10.1997

DATE NOT IN FORCE

DATE OF LAST RENEWAL 01.10.1996

YEAR OF LAST RENEWAL 06

STATUS PATENT IN FORCE

**** END OF REPORT ****