US010472889B1

(12) **United States Patent**
Betz

(10) **Patent No.: US 10,472,889 B1**
(45) **Date of Patent: Nov. 12, 2019**

(54) **AERIAL LADDER ASSEMBLY**

(71) Applicant: **Oshkosh Corporation**, Oshkosh, WI (US)

(72) Inventor: **Eric D. Betz**, Clintonville, WI (US)

(73) Assignee: **Oshkosh Corporation**, Oshkosh, WI (US)

(*) Notice: Subject to any disclaimer, the term of this patent is extended or adjusted under 35 U.S.C. 154(b) by 0 days.

(21) Appl. No.: **16/389,143**

(22) Filed: **Apr. 19, 2019**

Related U.S. Application Data

(60) Provisional application No. 62/661,419, filed on Apr. 23, 2018.

(51) **Int. Cl.**

E06C 5/04	(2006.01)
B66F 11/04	(2006.01)
E06C 5/36	(2006.01)
A62C 27/00	(2006.01)

(52) **U.S. Cl.**
CPC ***E06C 5/04*** (2013.01); ***A62C 27/00*** (2013.01); ***B66F 11/046*** (2013.01); ***E06C 5/36*** (2013.01)

(58) **Field of Classification Search**
CPC E06C 5/04; E06C 5/36
USPC 182/2.5, 64.1
See application file for complete search history.

(56) **References Cited**

U.S. PATENT DOCUMENTS

2,228,525 A * 1/1941 Lundskow E06C 1/12 182/106
9,302,129 B1 4/2016 Betz et al.
2014/0251726 A1 9/2014 Ditty et al.
2015/0259185 A1 9/2015 Ditty
2016/0144210 A1 5/2016 Betz et al.
2016/0144211 A1 5/2016 Betz et al.
2016/0145940 A1 5/2016 Aiken et al.
2016/0145941 A1 5/2016 Betz et al.
2016/0215560 A1 7/2016 Aiken et al.
2016/0305185 A1* 10/2016 Salmi E06C 5/04
2016/0311253 A1 10/2016 Palmer et al.
2017/0121108 A1 5/2017 Davis et al.
2017/0225888 A1 8/2017 Betz et al.
2018/0038517 A1 2/2018 Ditty et al.
2018/0215597 A1 8/2018 Linsmeier et al.
2019/0119088 A1 4/2019 Puszkiewicz et al.
2019/0137006 A1 5/2019 Ditty et al.
2019/0161272 A1 5/2019 Betz et al.

FOREIGN PATENT DOCUMENTS

DE 3625298 A1 * 10/1987 ..... E06C 1/12
DE 3640944 A1 * 6/1988 ..... E06C 5/04
KR 2012140071 A * 12/2012

* cited by examiner

Primary Examiner — Alvin C Chin-Shue
(74) *Attorney, Agent, or Firm* — Foley & Lardner LLP

(57) **ABSTRACT**

A fire apparatus includes a chassis, axles coupled to the chassis, a turntable rotatably coupled to the chassis, and an aerial ladder assembly pivotably coupled the turntable and including a ladder section. The ladder section includes a first base rail and a second base rail extending longitudinally, a plurality of ladder rungs extending between the first base rail and the second base rail, a top plate positioned above the first base rail, a series of lacing members coupled to the top plate and the first base rail, and a gusset plate coupled to the top plate and at least one of the lacing members. The top plate extends at least one of (a) laterally inward of the gusset plate and (b) laterally outward of the gusset plate. The top plate has a solid cross section.

11 Claims, 32 Drawing Sheets

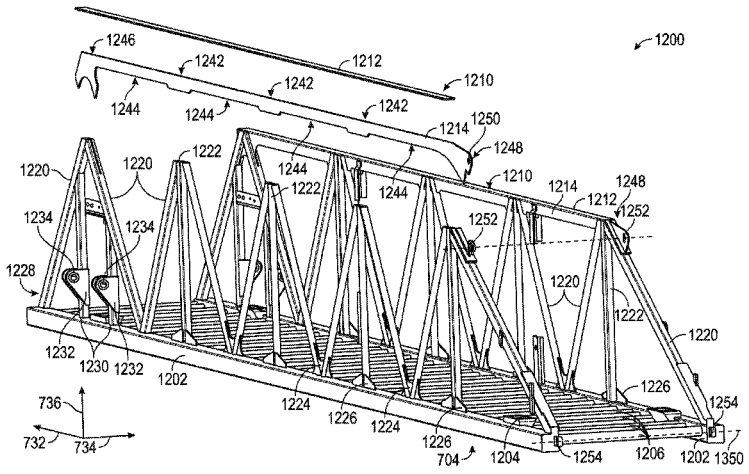

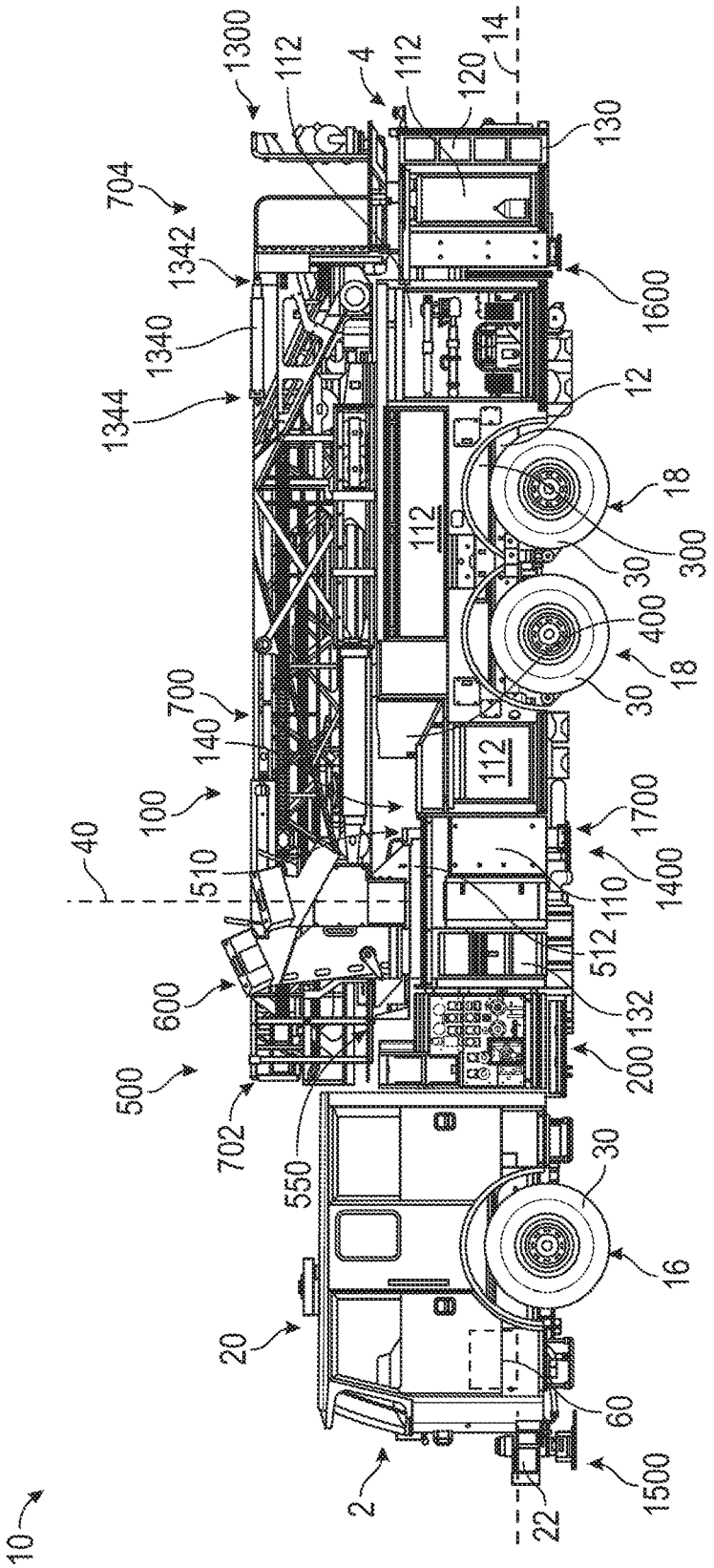
1300
112
4
112
120
14
130
704
1342
1340
1344
1600
12
18
300
30
400
18
30
112
112
700
140
100
40
510
1700
1400
110
512
132
200
600
500
702
550
30
16
20
60
2
22
1500
10

FIG. 1

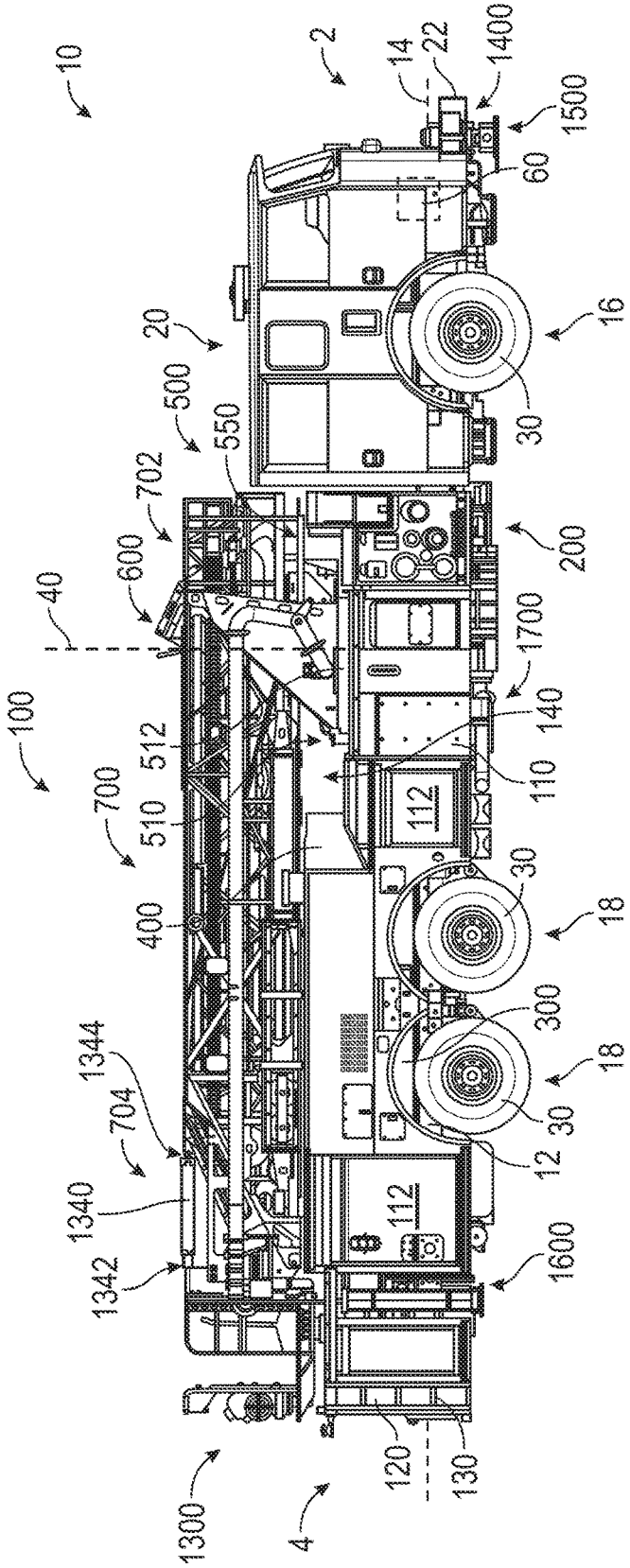
10
2
14
22
1400
1500
60
20
16
30
500
550
702
200
600
40
1700
100
140
512
110
112
700
510
30
18
400
300
1344
18
704
30
12
1340
112
1342
1600
120
130
1300
4

FIG. 2

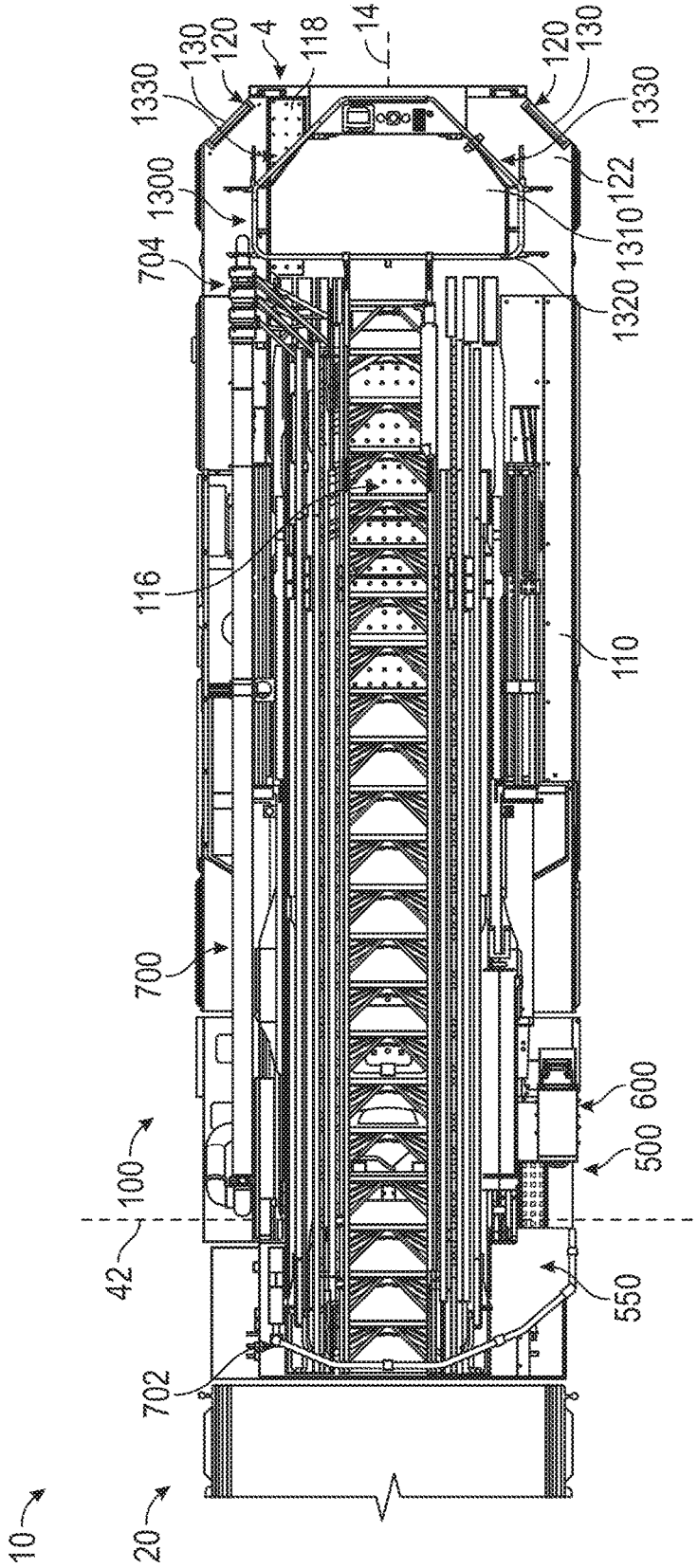
10
20
42
100
702
700
116
704
1300
1330
130
120
4
118
14
120
130
1330
122
1310
1320
110
600
500
550

FIG. 3

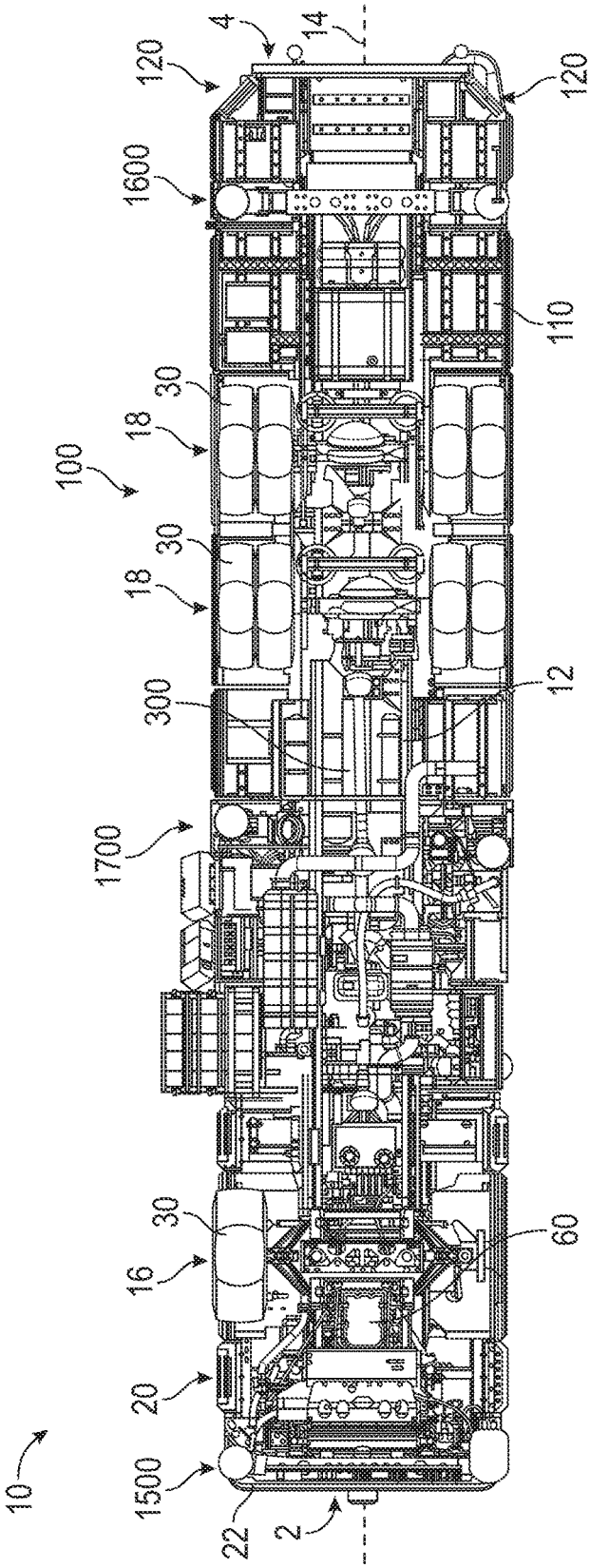
4
14
120
120
1600
110
30
18
100
30
18
300
12
1700
30
16
60
20
10
1500
22
2

FIG. 4

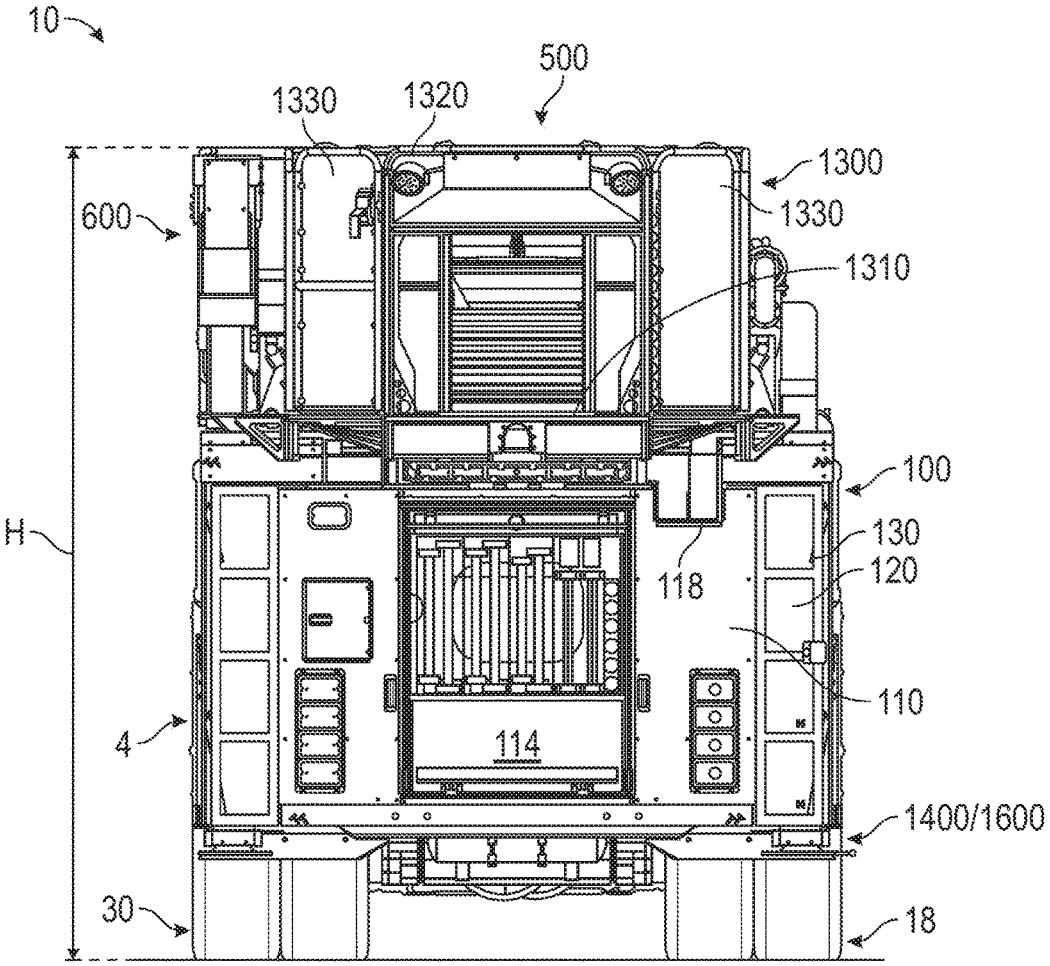
10
500
1330
1320
1300
1330
600
1310
100
H
130
120
118
110
4
114
1400/1600
30
18

FIG. 5

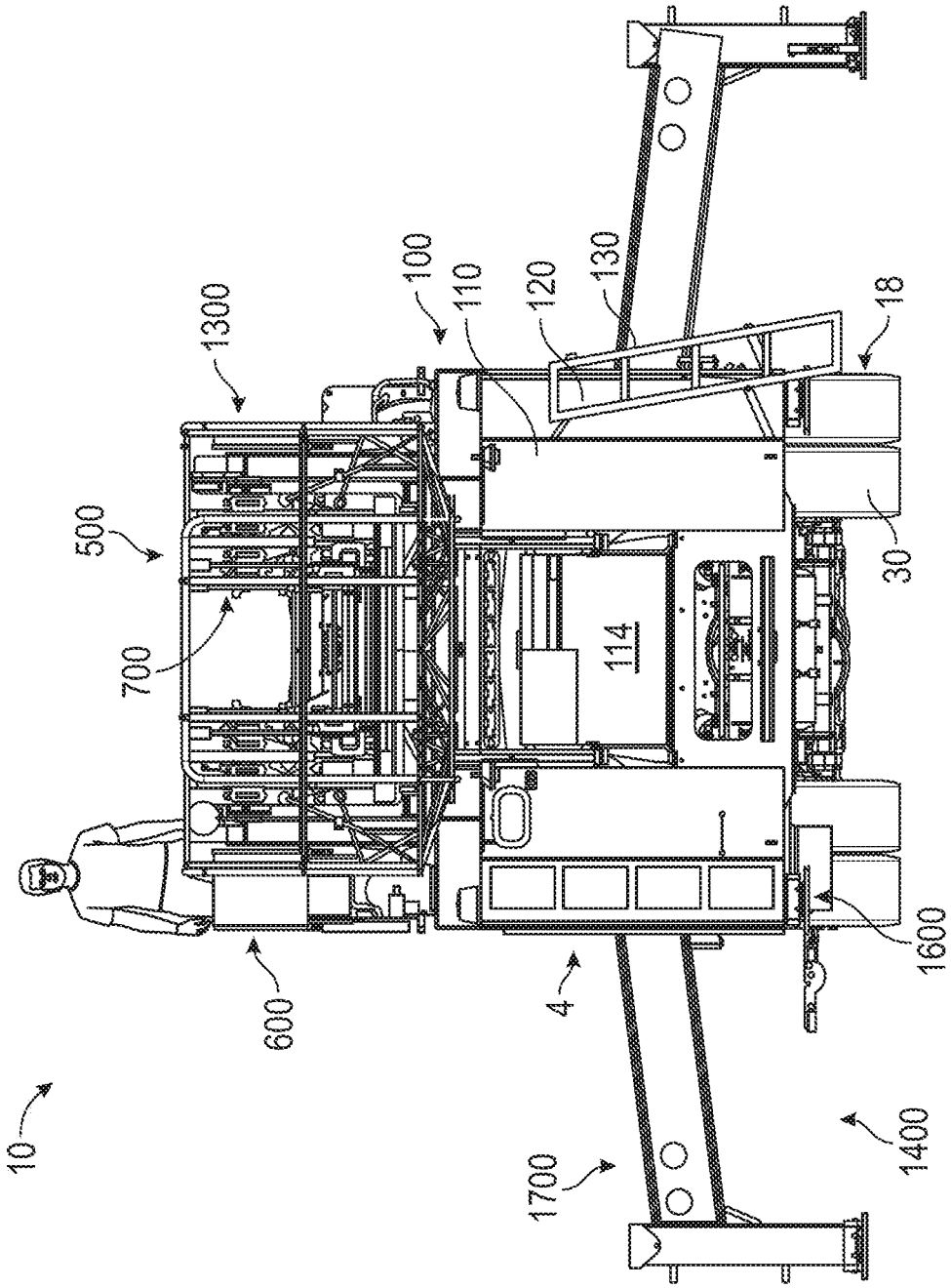

FIG. 6

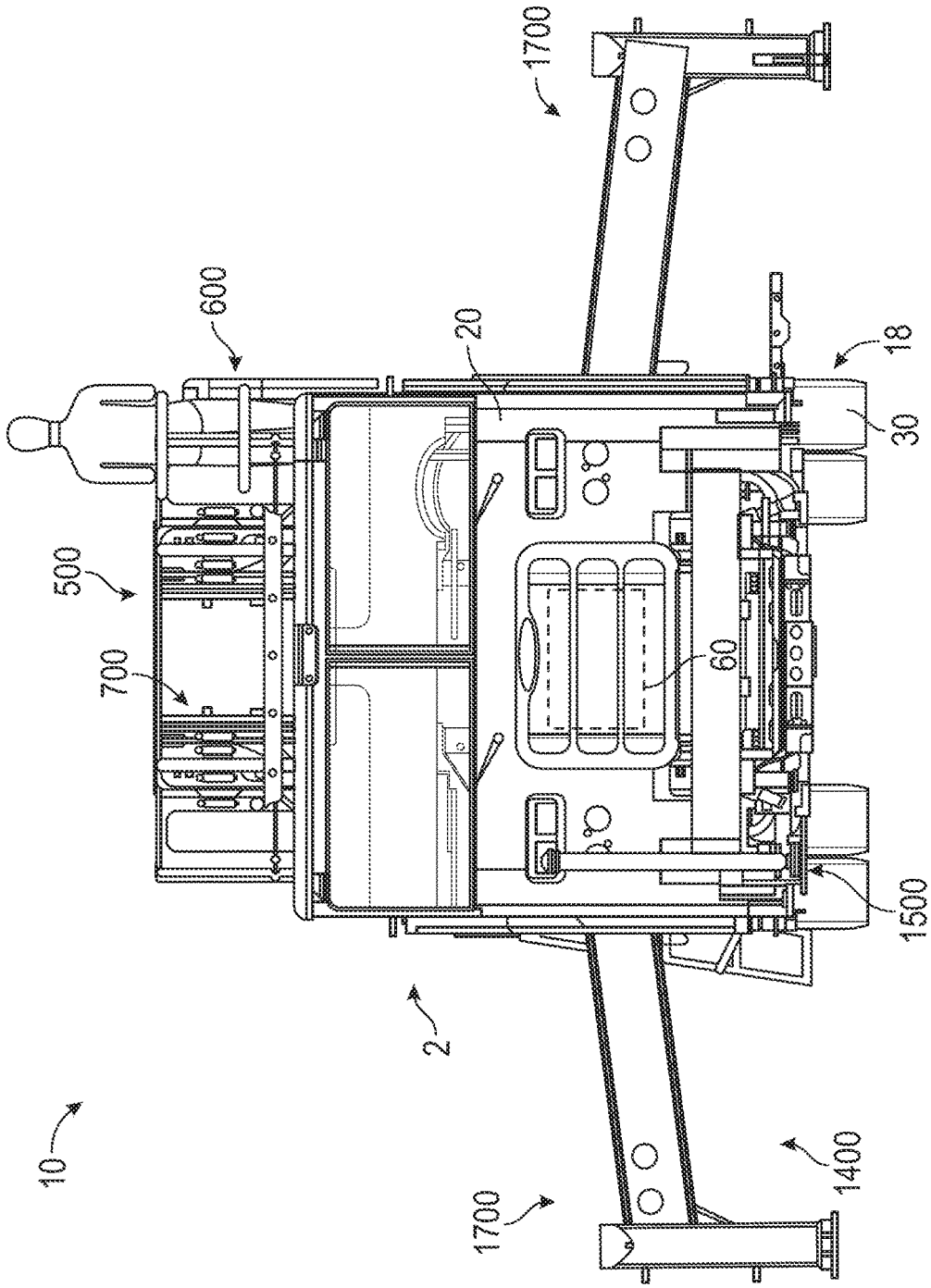

FIG. 7

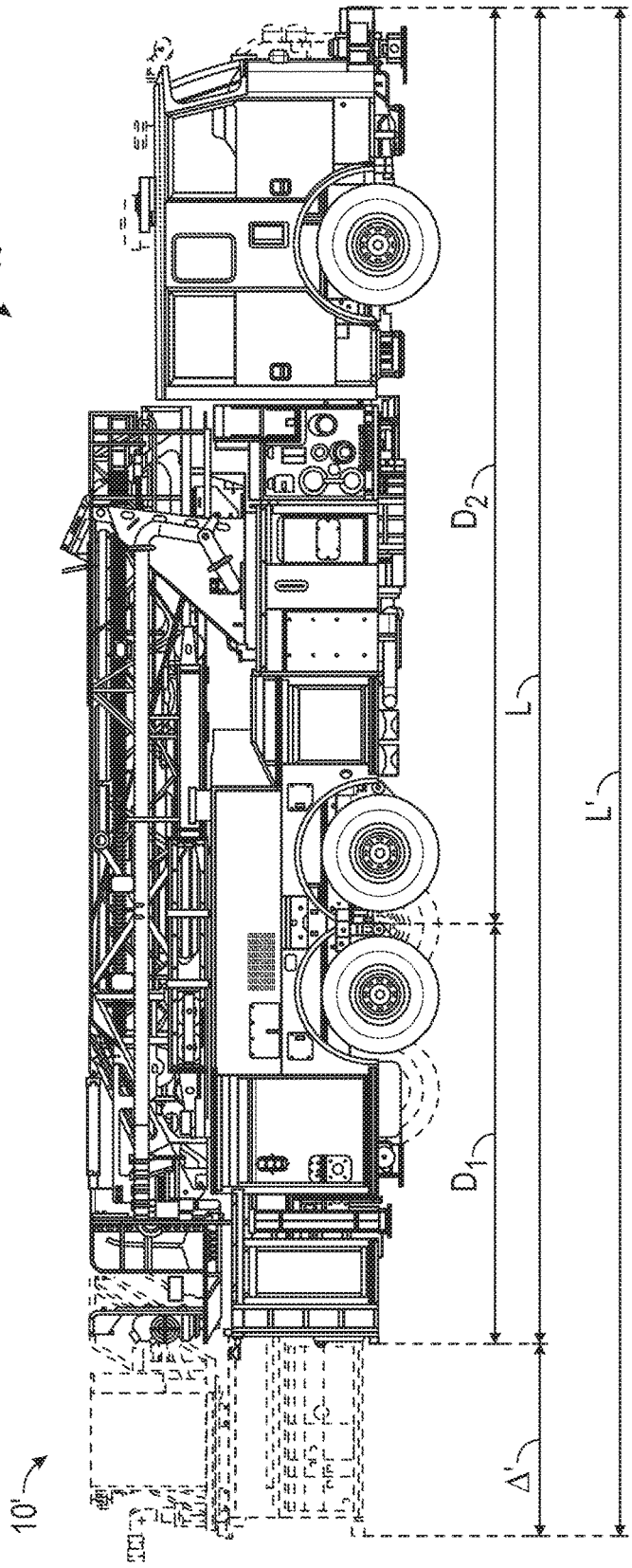

FIG. 8

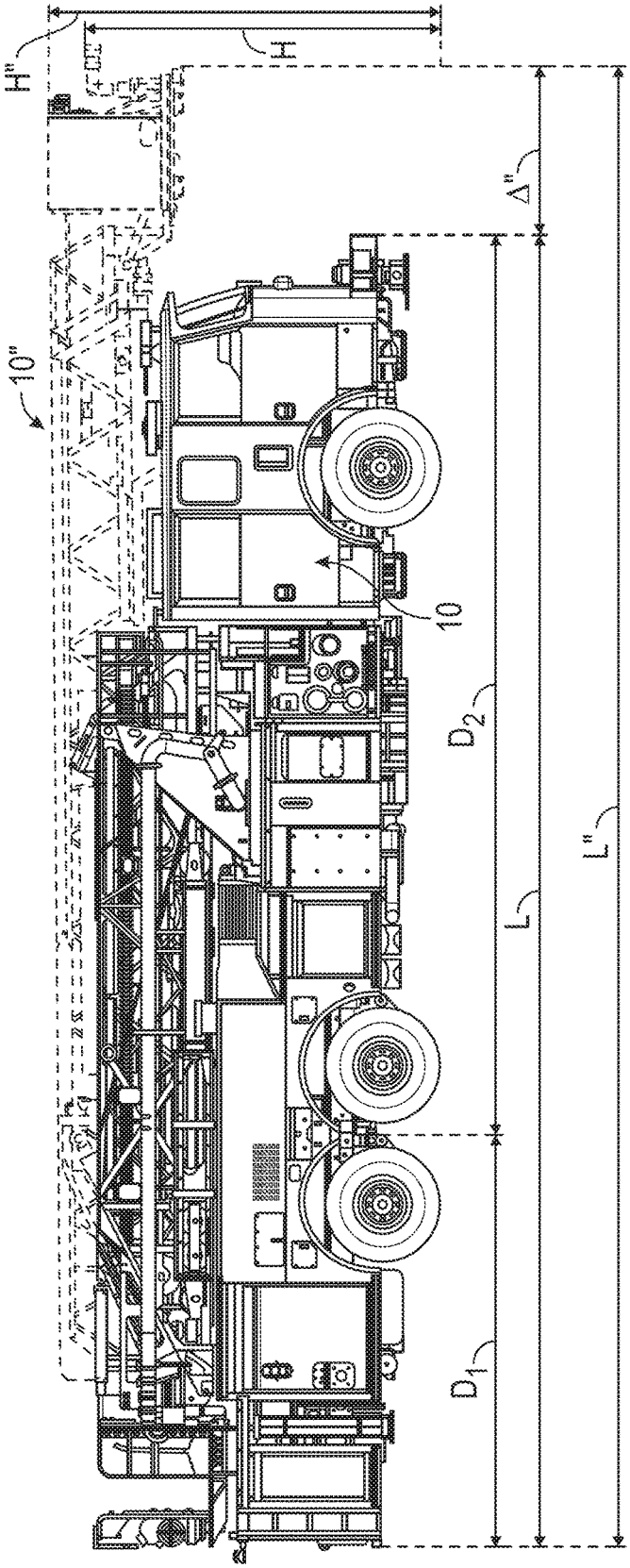

FIG. 9

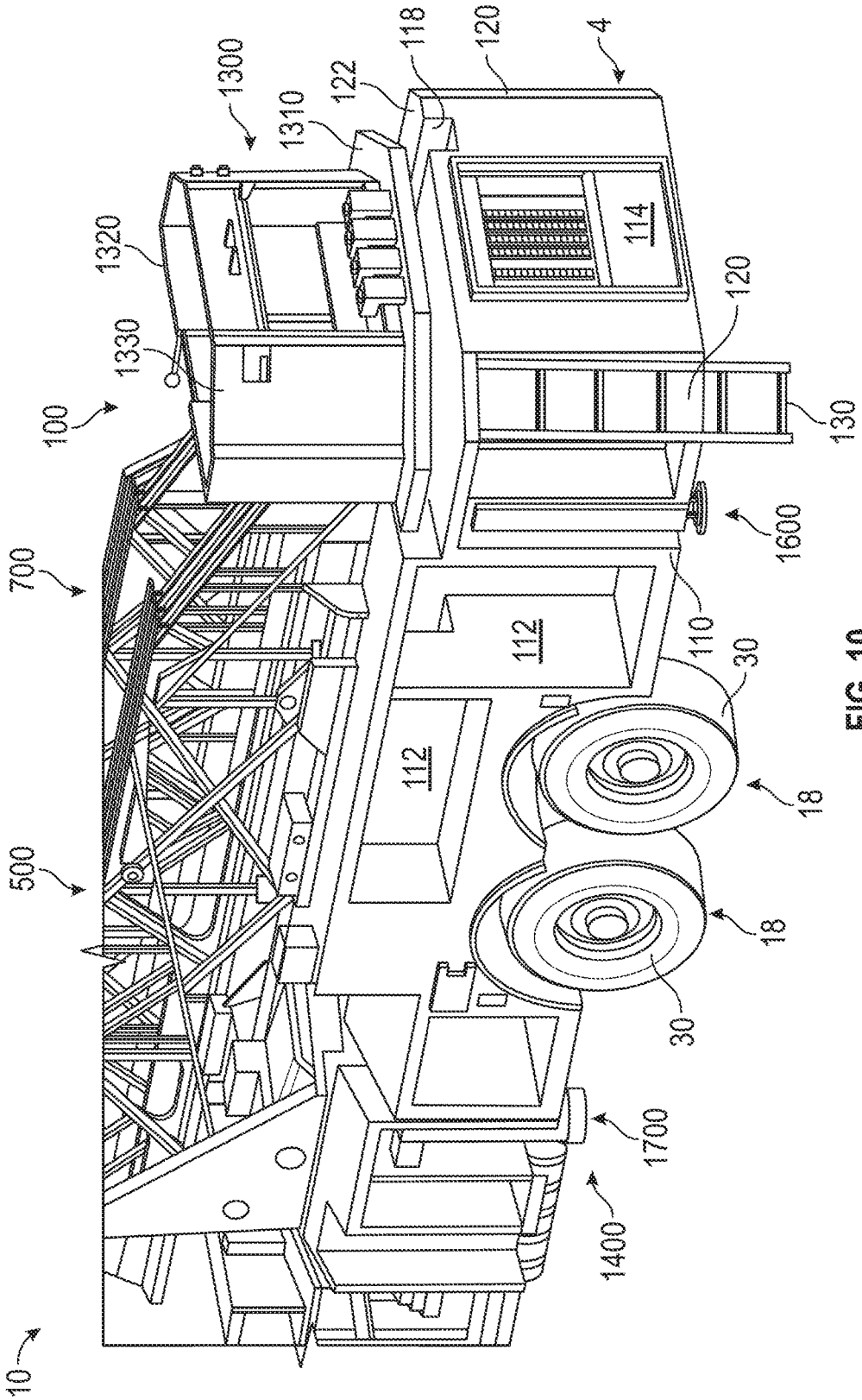
10
500
700
100
1330
1320
1300
1310
122
118
120
4
114
120
130
1600
110
112
112
30
18
18
30
1700
1400

FIG. 10

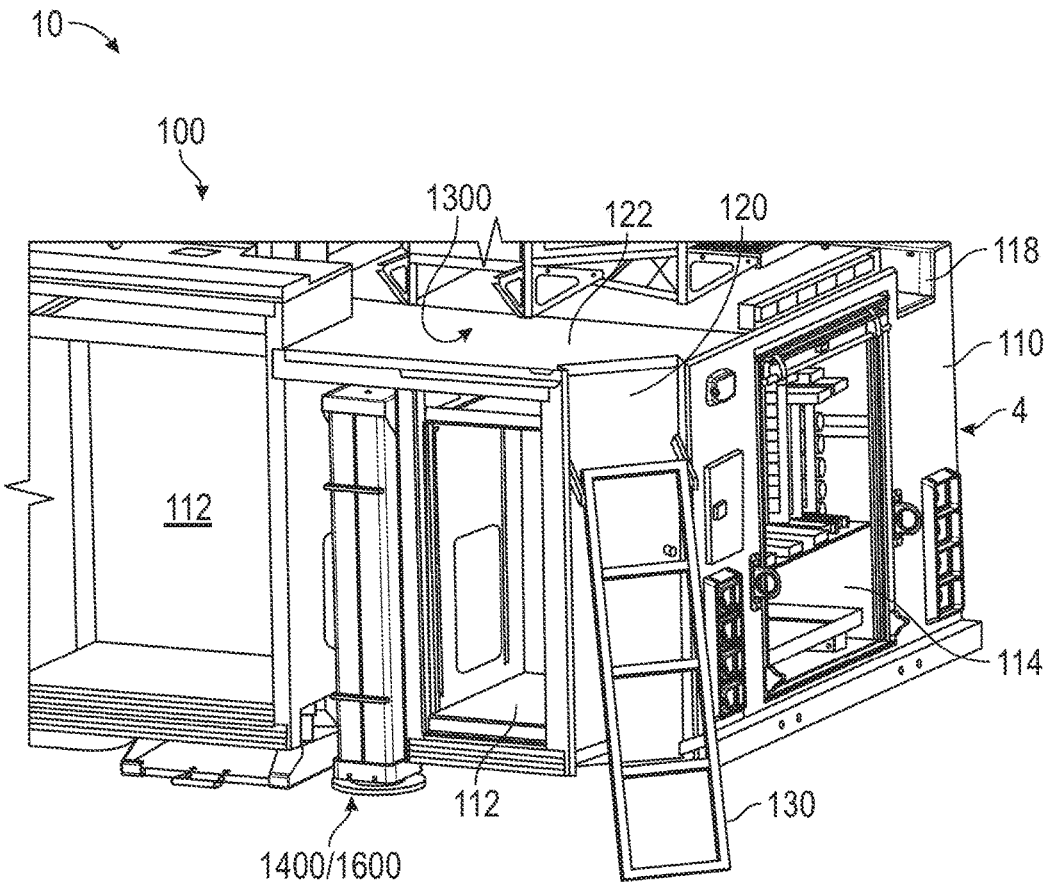

FIG. 11

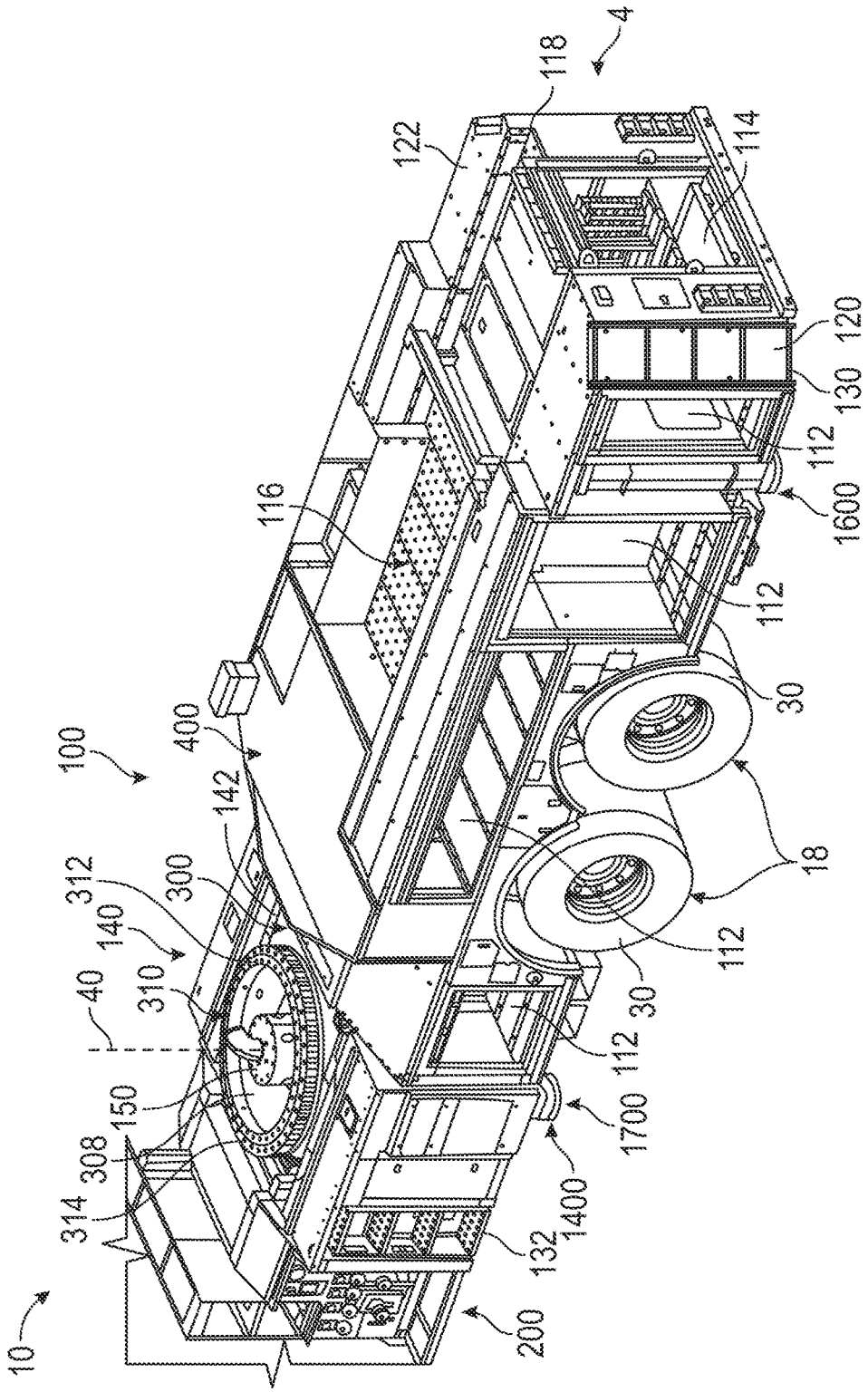
4
118
122
114
120
130
112
1600
116
112
30
18
112
30
112
1700
1400
132
200
10
314
308
150
40
310
140
312
300
142
400
100

FIG. 12

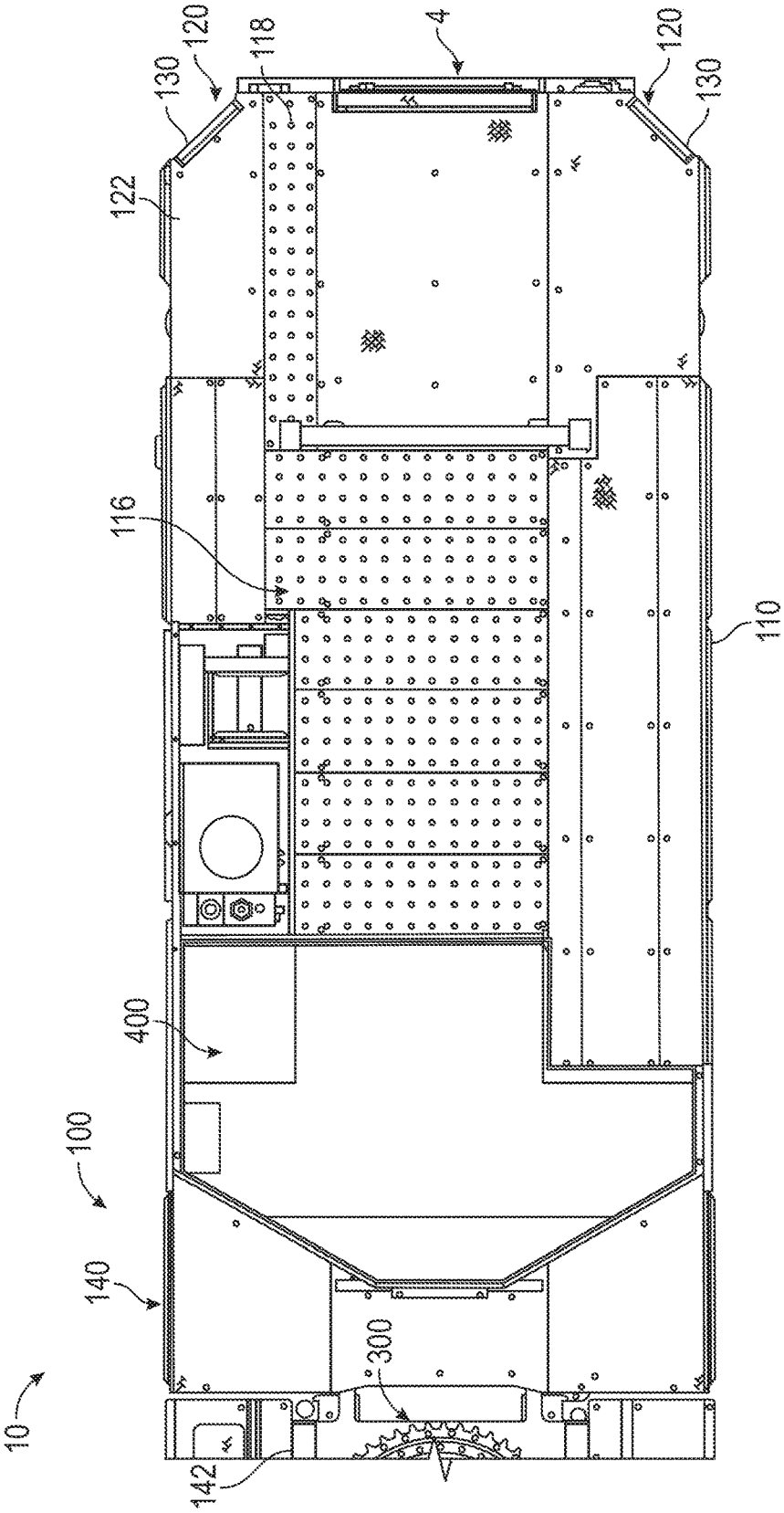

FIG. 13

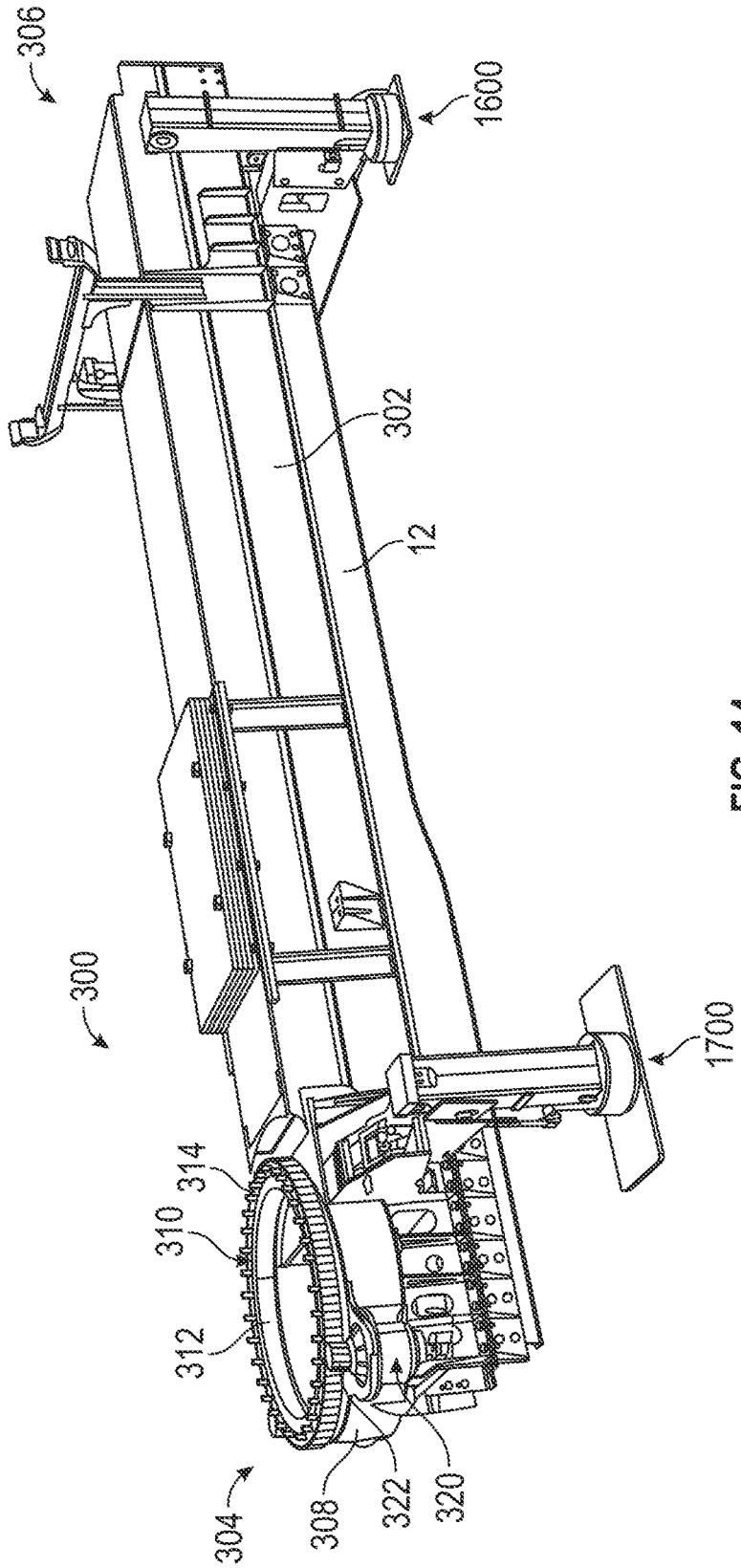

FIG. 14

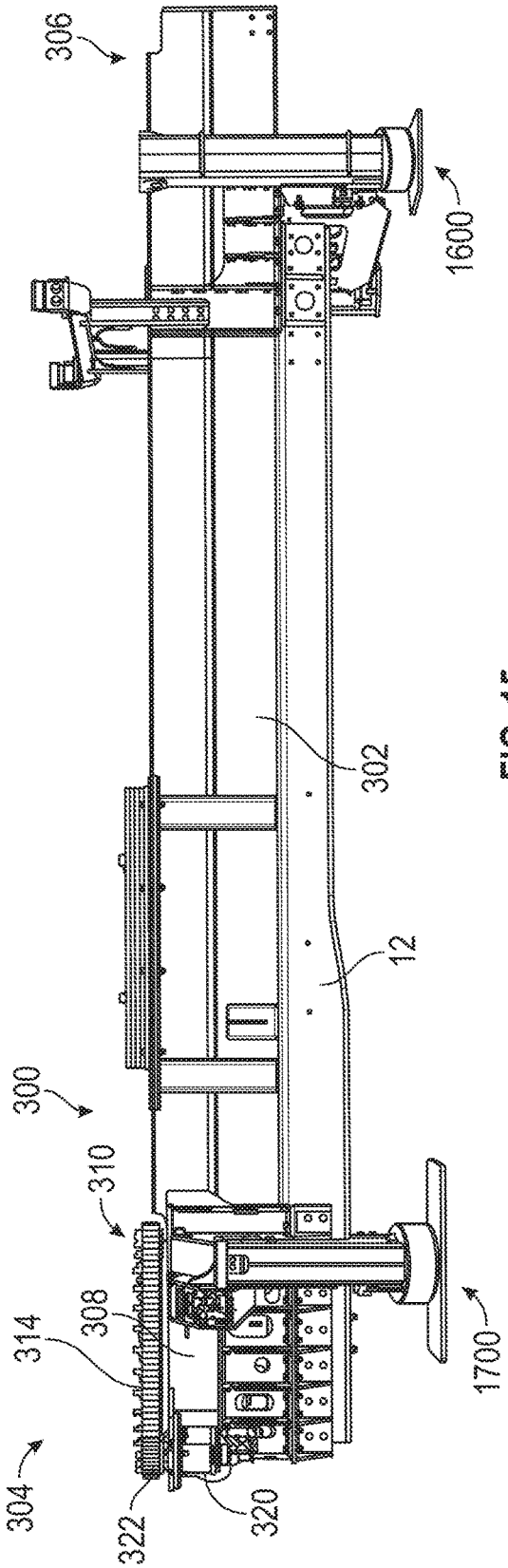

FIG. 15

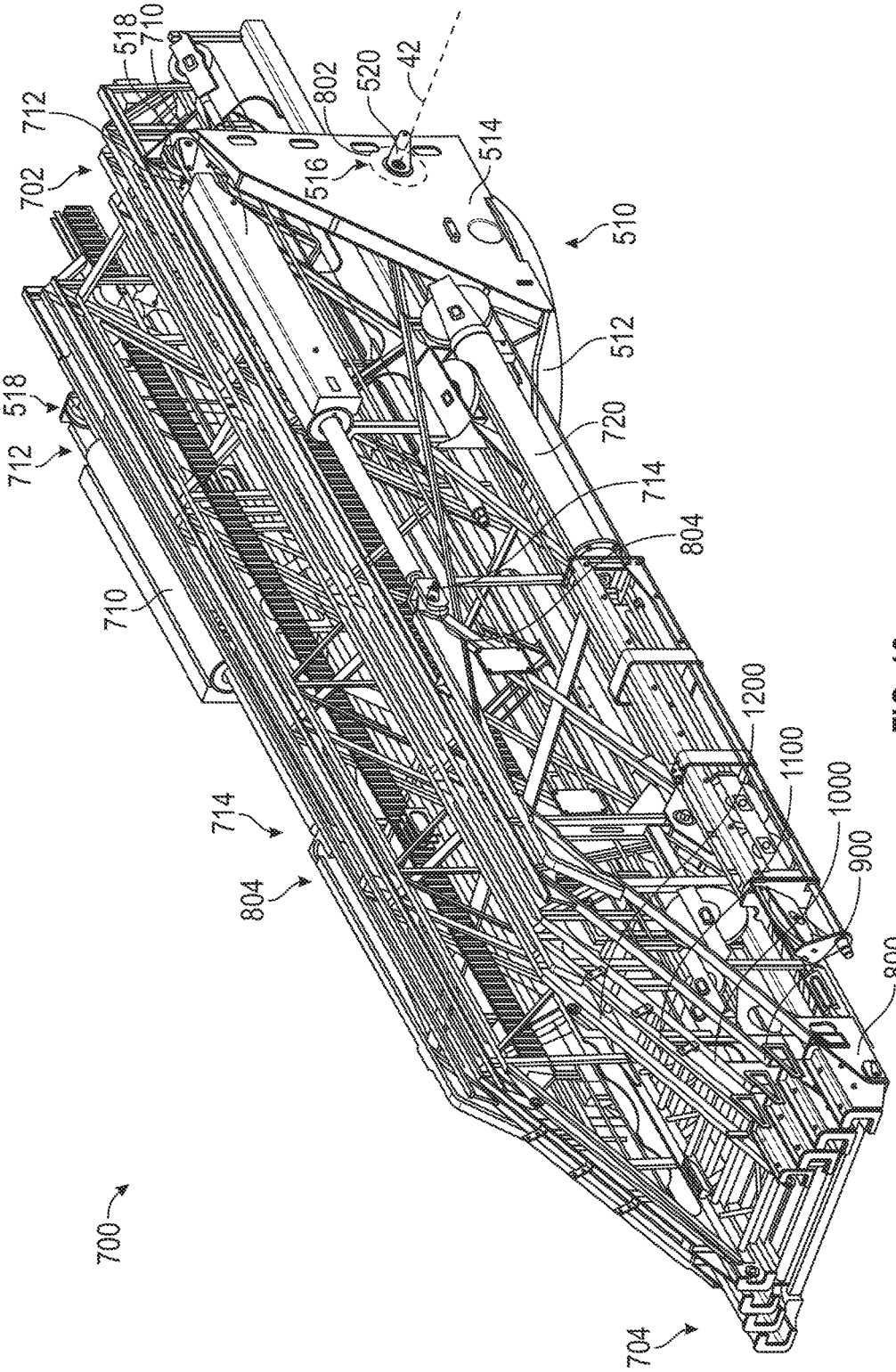
518
710
712
702
802
520
42
516
514
510
512
720
714
804
1200
1100
1000
900
800
704
700

FIG. 16

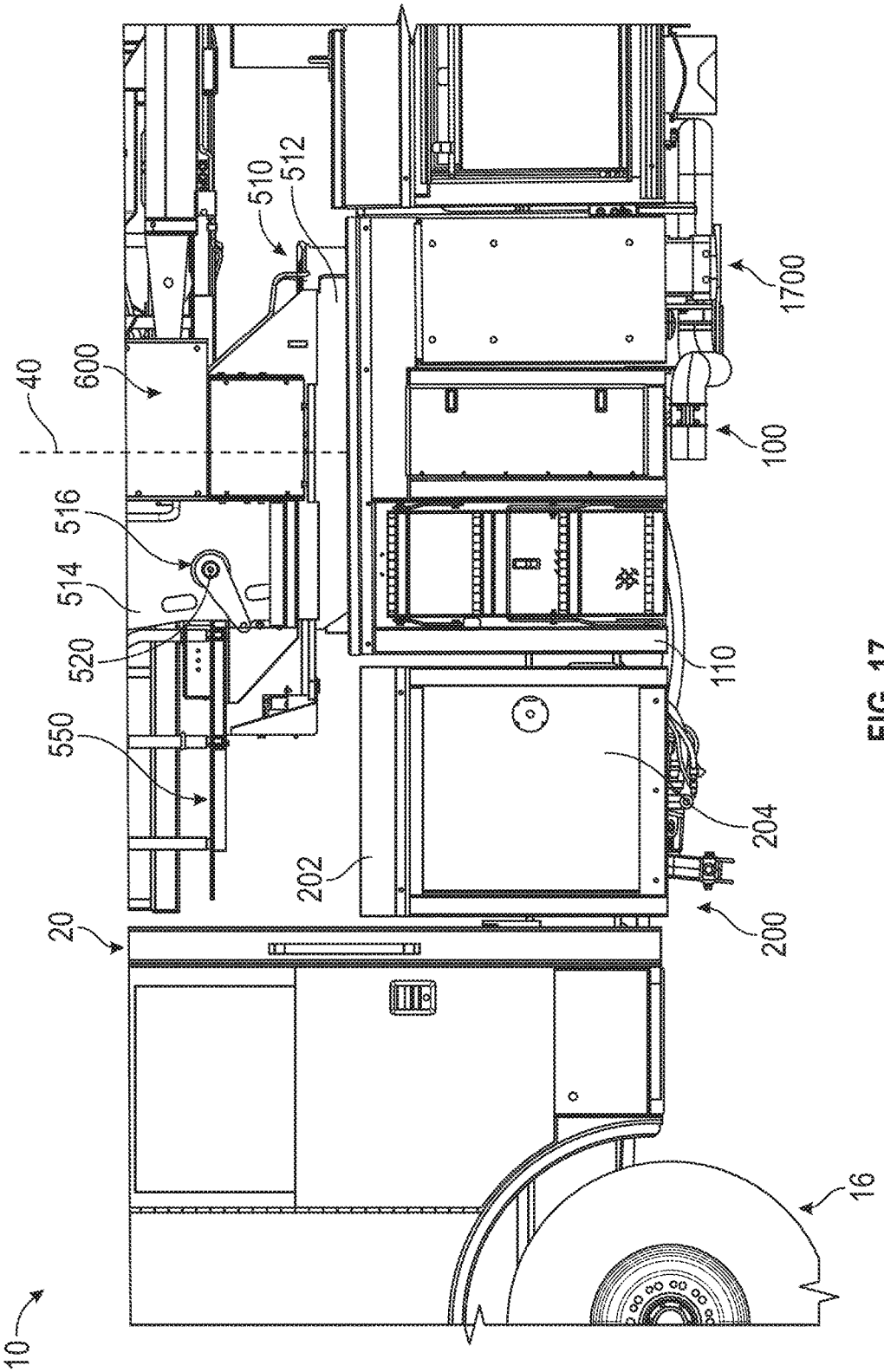

FIG. 17

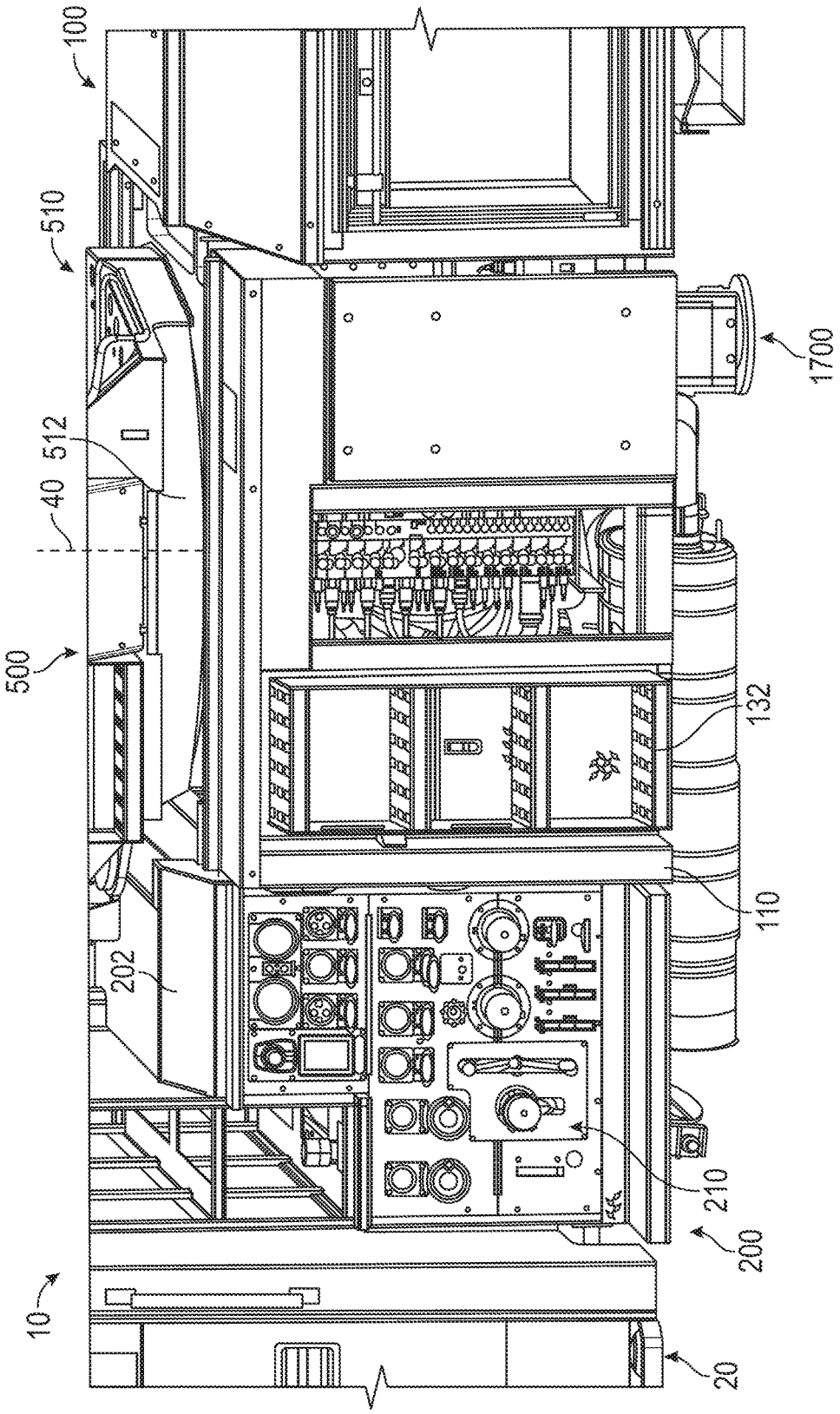

FIG. 18

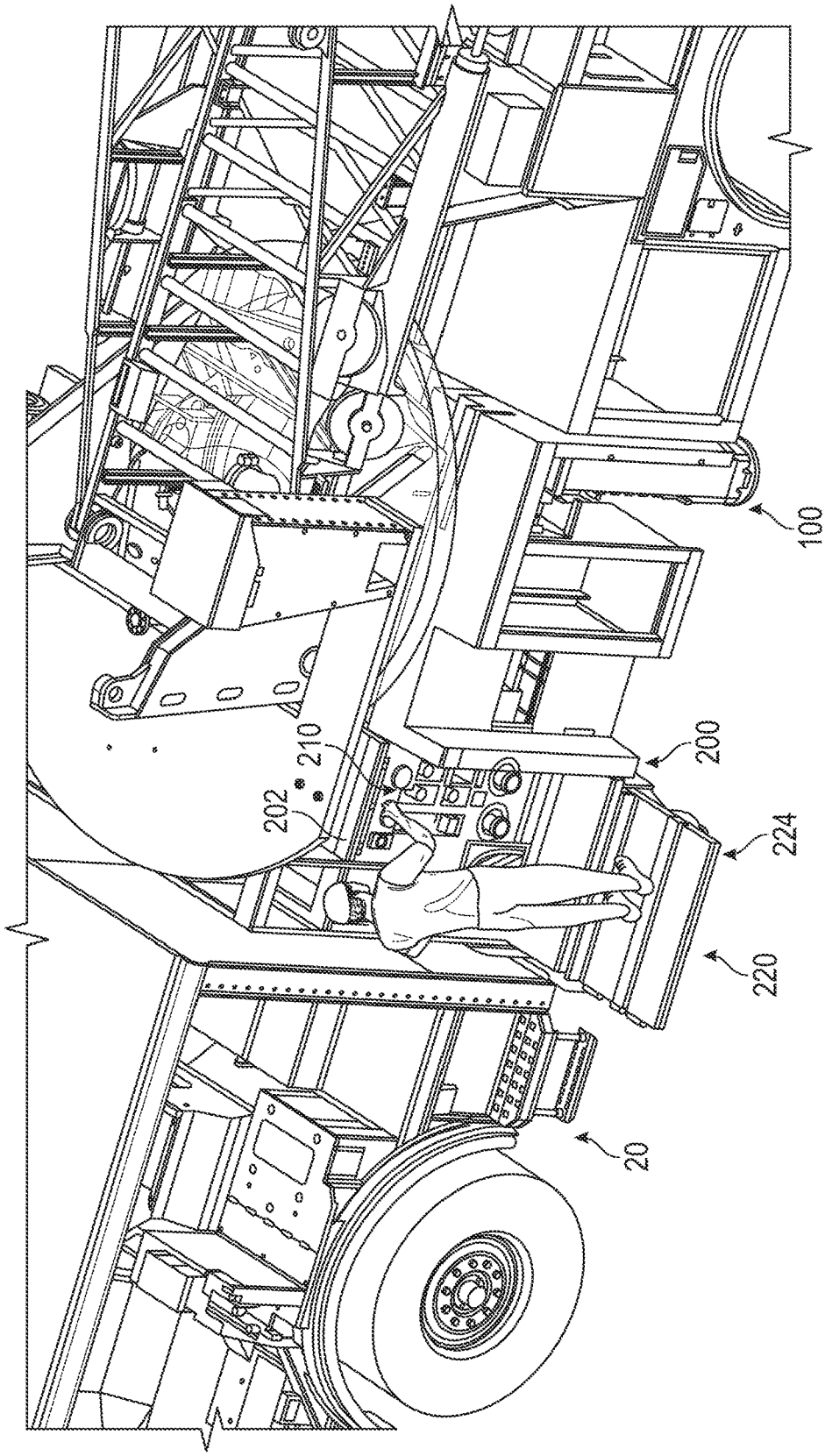

FIG. 19

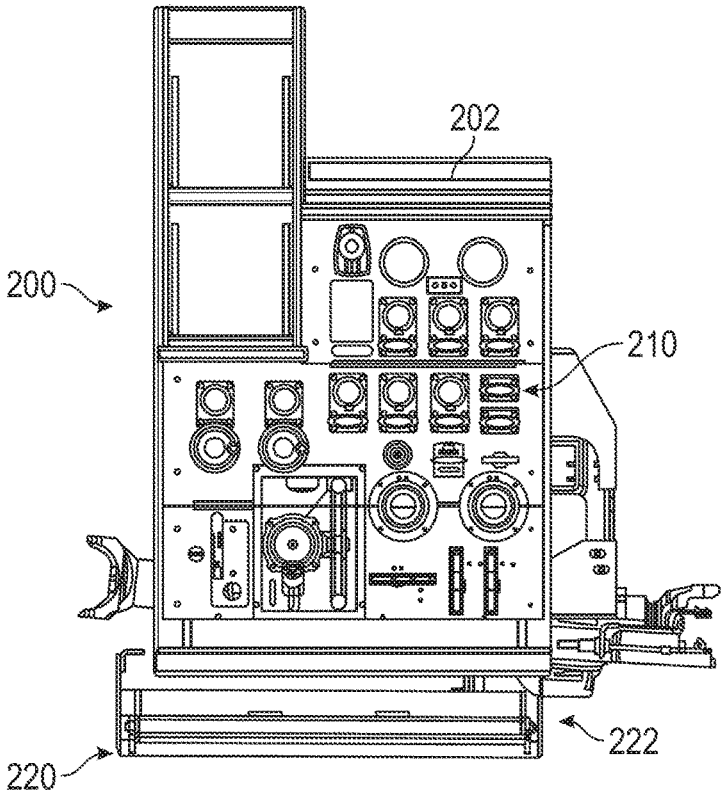

FIG. 20

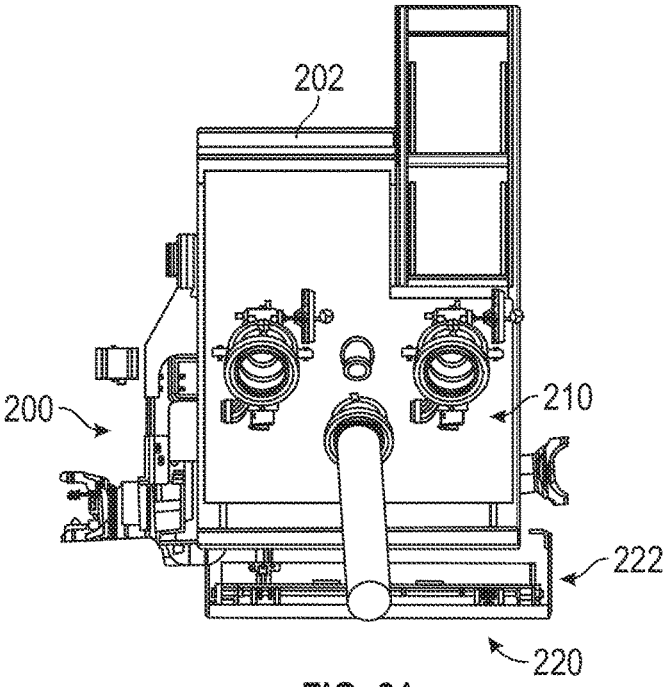

FIG. 21

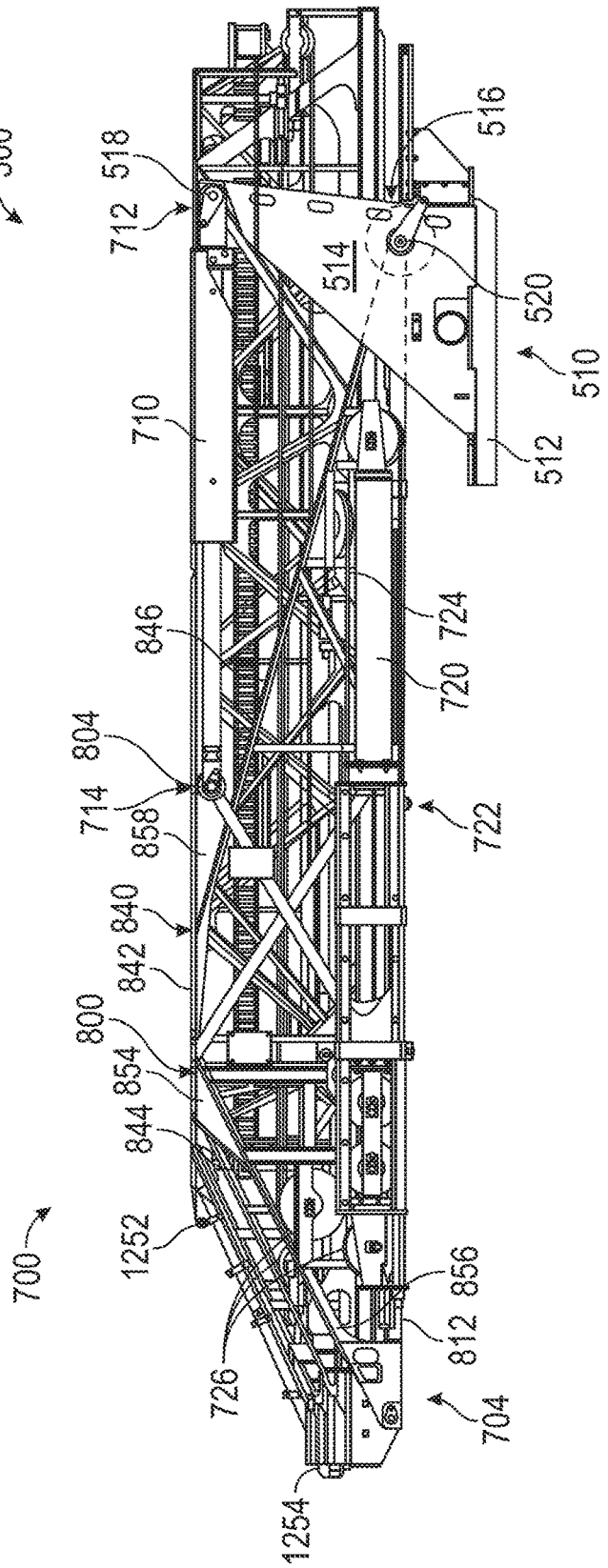
500
518
712
516
514
520
510
710
512
846
724
720
804
714
858
722
840
842
800
854
844
1252
700
856
812
726
704
1254

FIG. 22

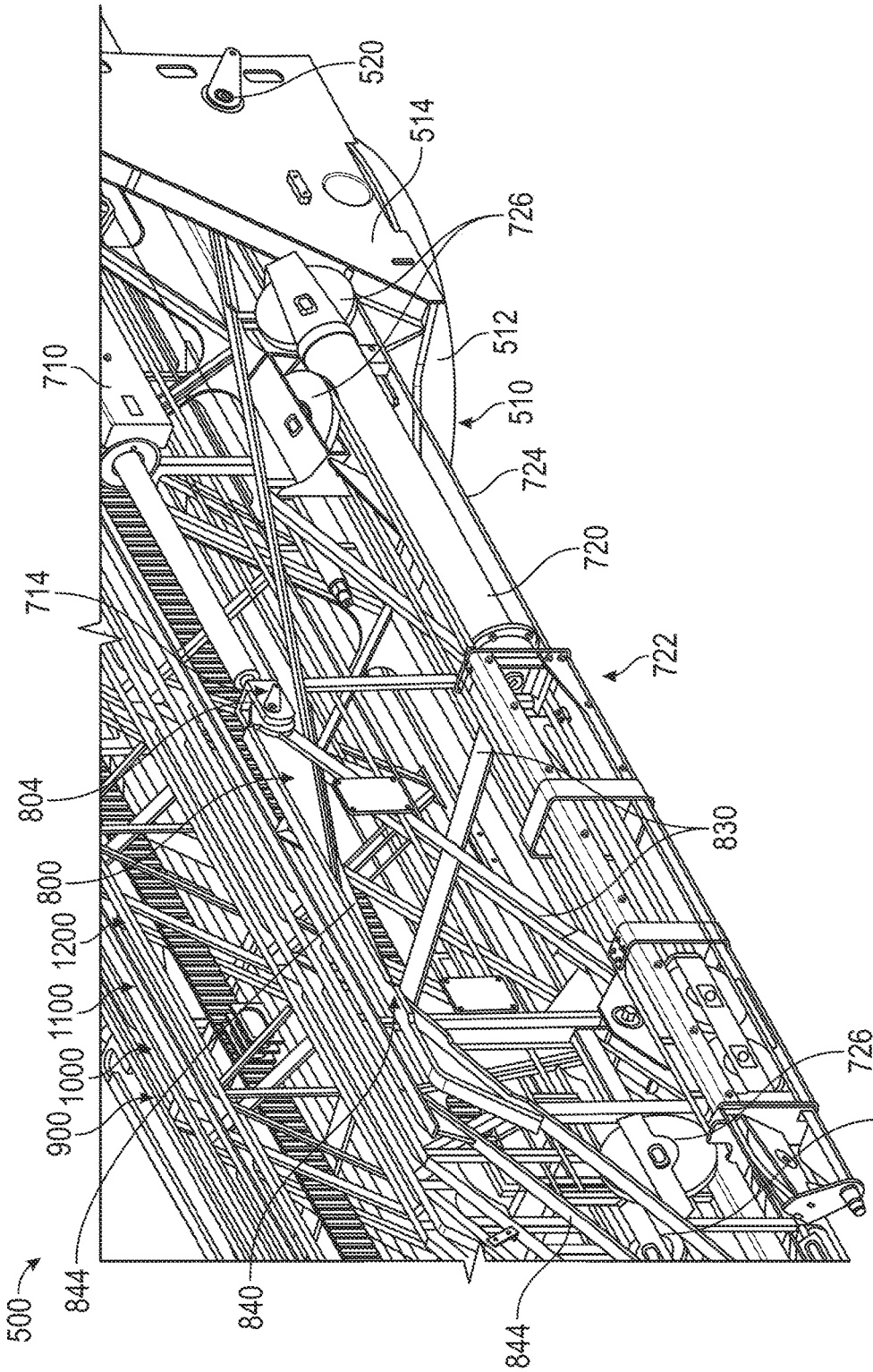
520
514
726
512
510
724
720
722
710
714
804
800
1200
1100
1000
900
830
726
726
500
844
840
844

FIG. 23

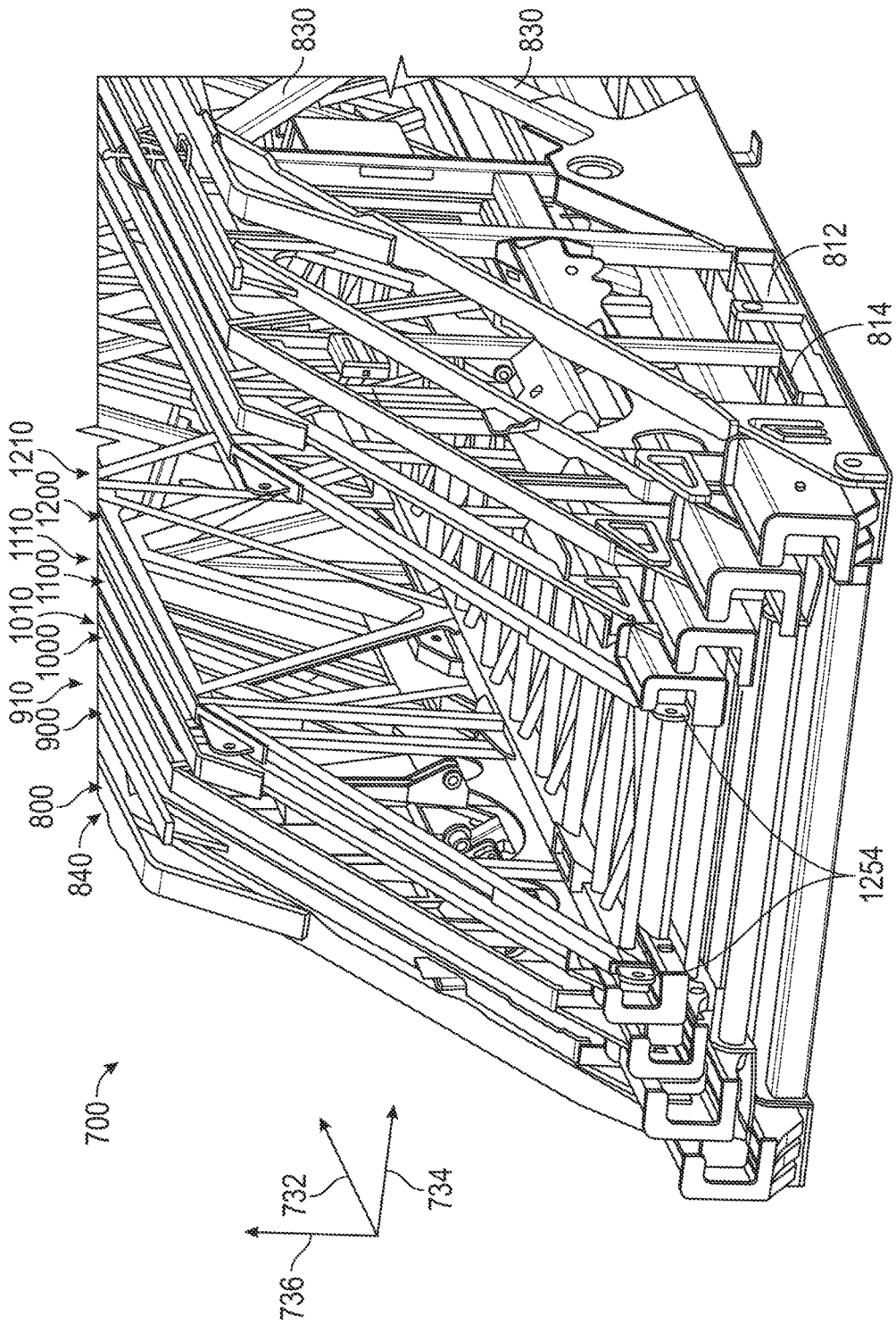
830
830
812
814
1210
1200
1110
1100
1010
1000
910
900
800
840
1254
700
732
734
736

FIG. 24

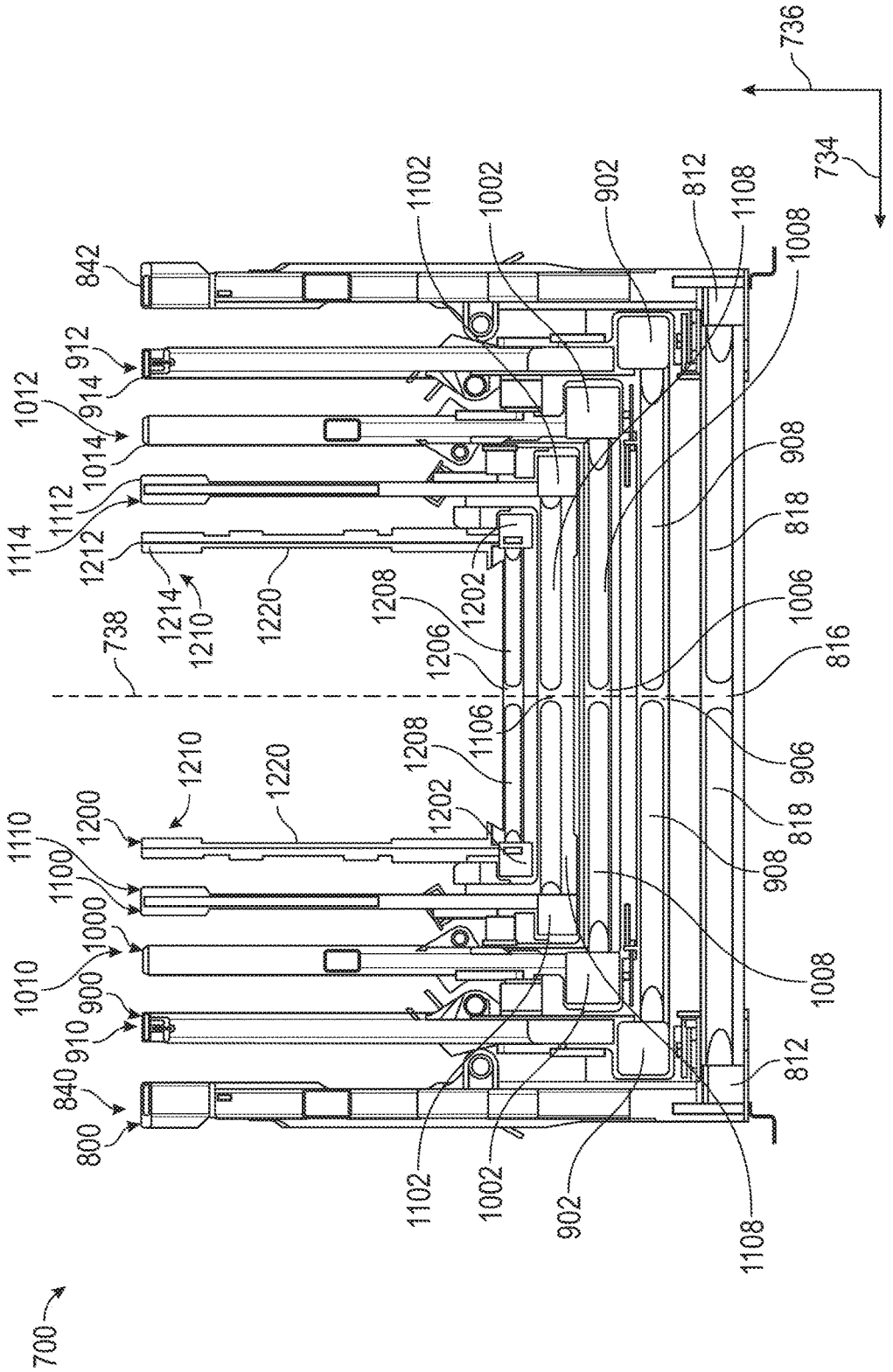
736
734
842
912
914
1012
1014
1112
1114
1212
1214
1210
1220
1208
1202
1206
1106
1102
1002
902
812
1108
1008
908
818
1006
816
906
738
1110
1100
1000
1010
900
910
840
800
700

FIG. 25

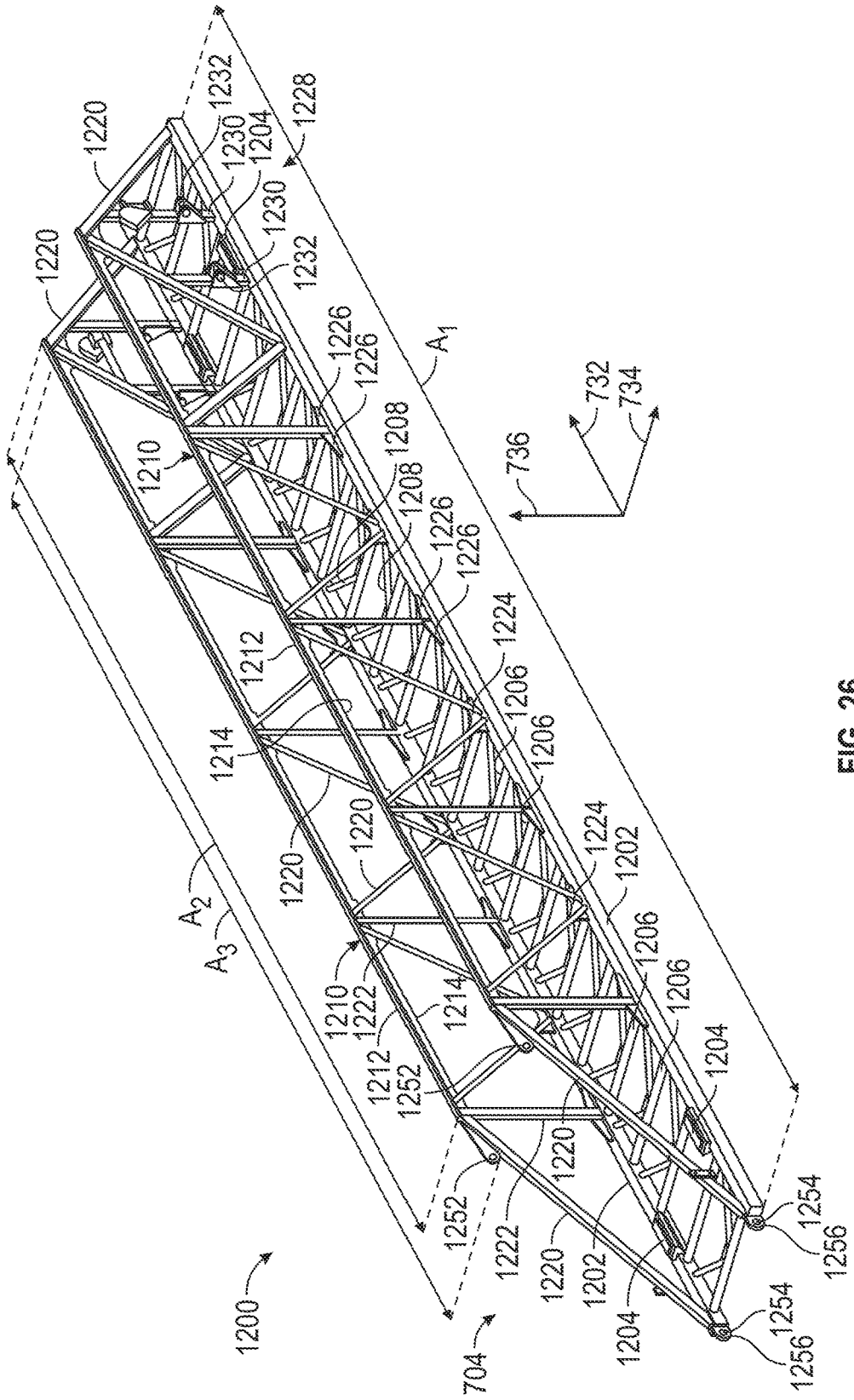
1200
704
1220
1232
1230
1204
1228
1226
1208
1210
1212
1214
1224
1206
1202
1222
1252
1254
1256
A_1
A_2
A_3
732
734
736

FIG. 26

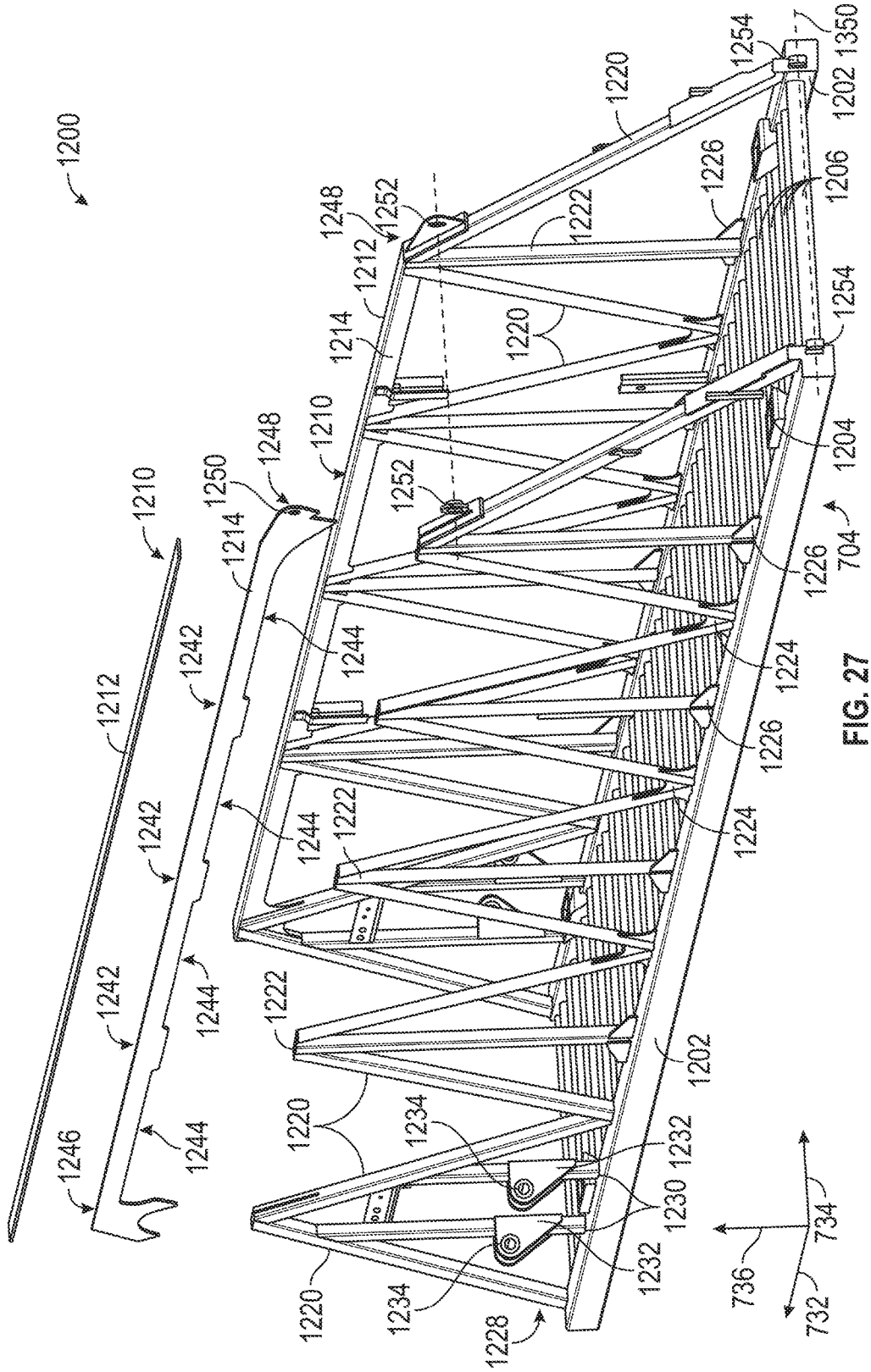
1200
1210
1212
1214
1220
1222
1224
1226
1228
1230
1232
1234
1242
1244
1246
1248
1250
1252
1254
1202
1204
1206
1350
704
732
734
736

FIG. 27

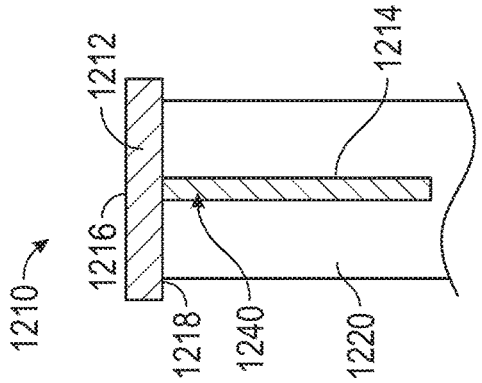
1210
1212
1214
1216
1218
1240
1220

FIG. 29

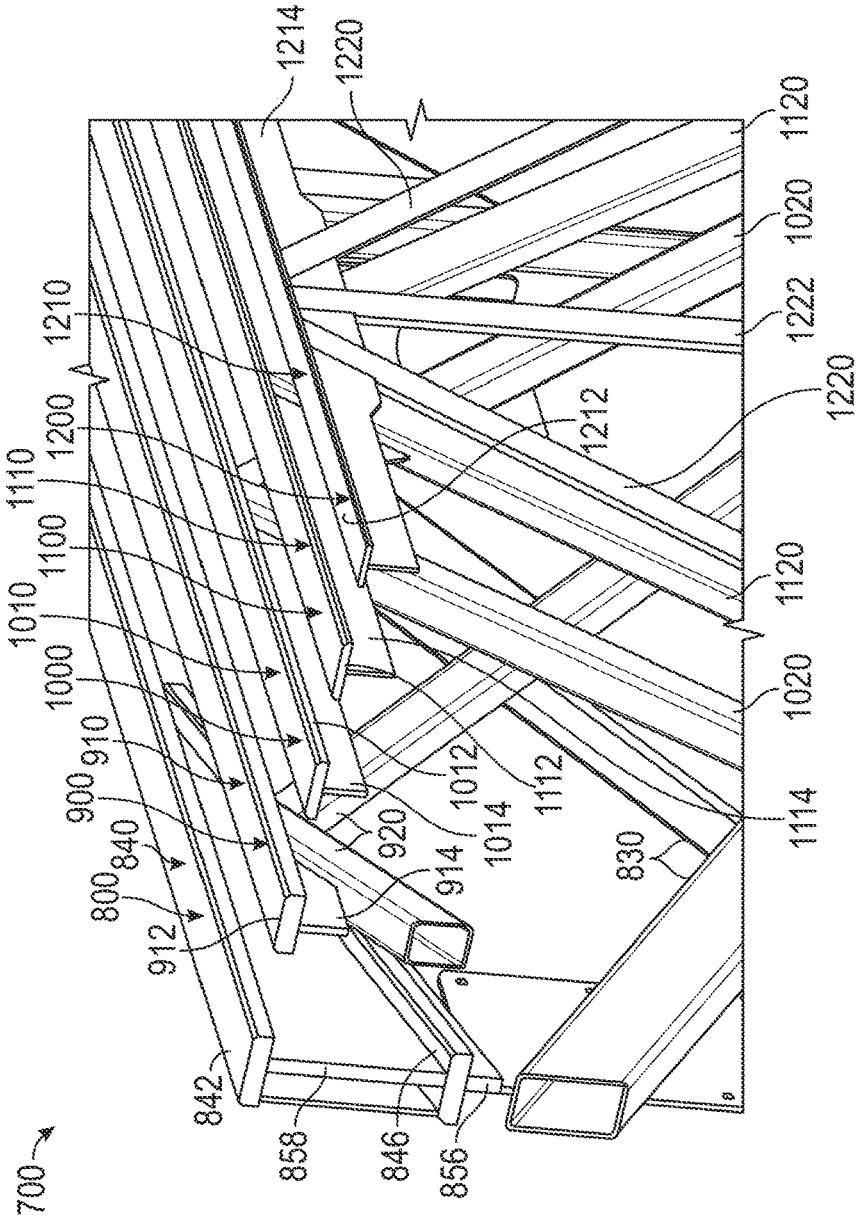
700
842
858
846
856
912
800
840
900
910
1000
1010
1100
1110
1200
1210
1214
1220
1120
1020
1222
1212
1220
1120
1020
1114
830
1112
1014
1012
920
914

FIG. 28

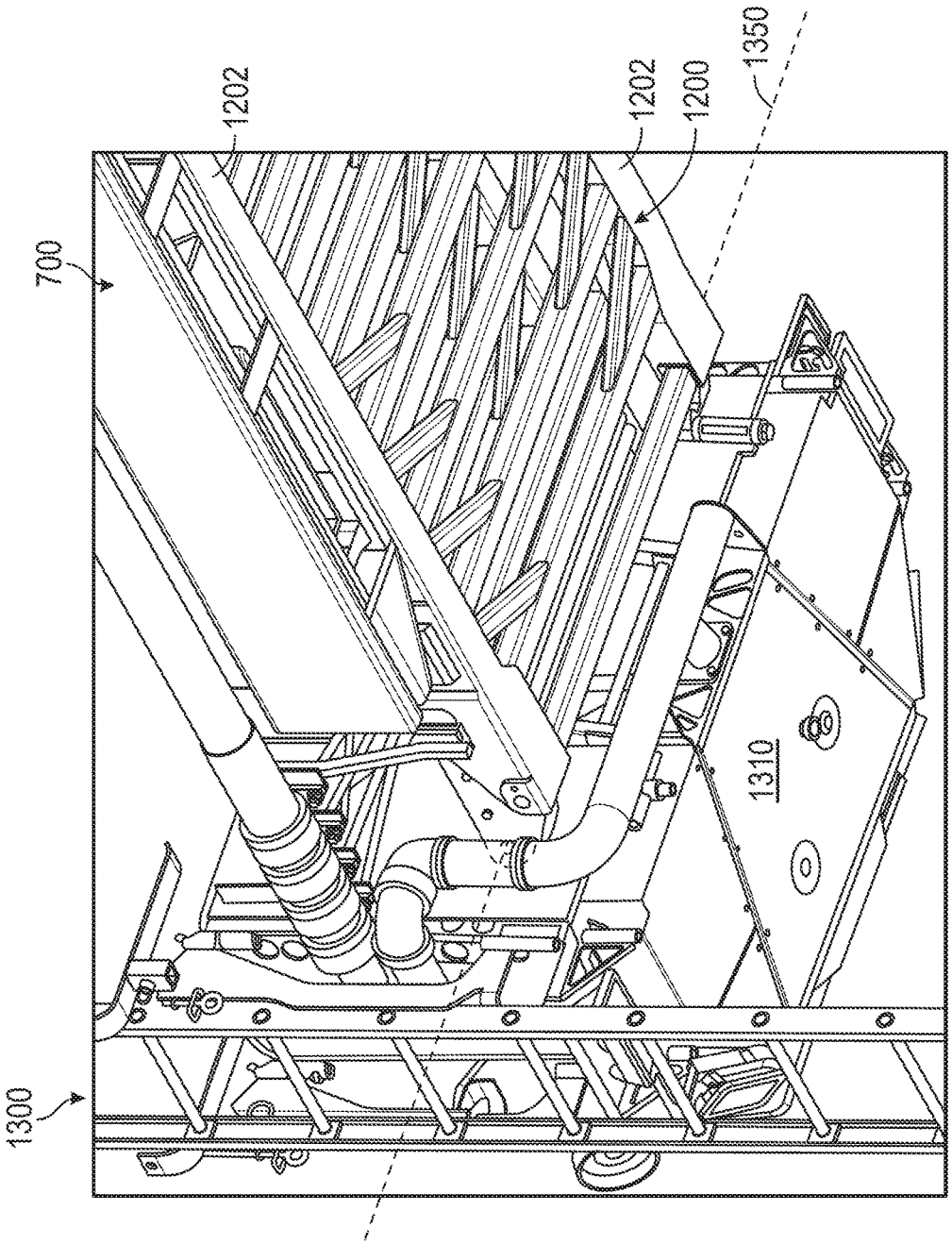

FIG. 30

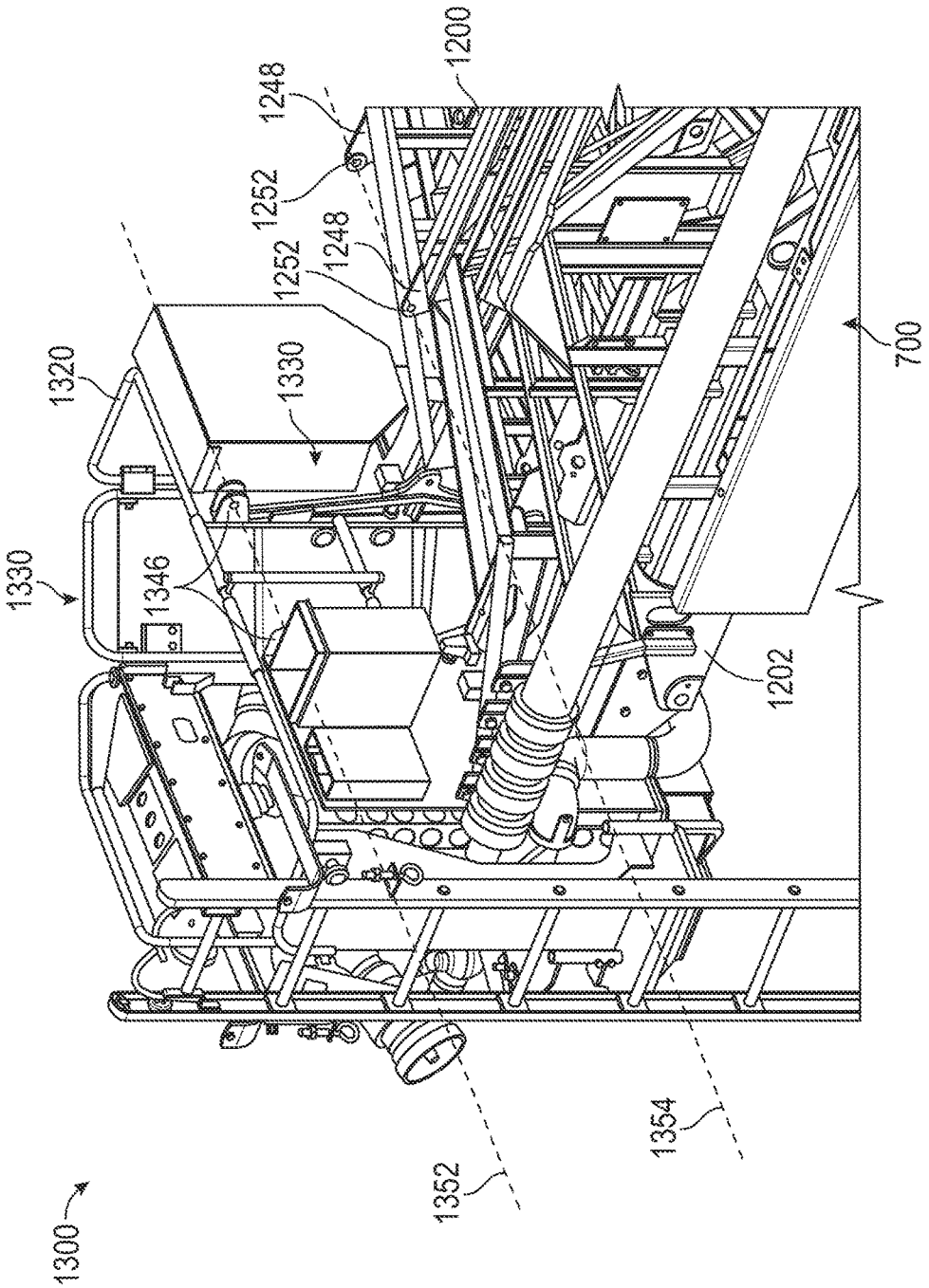
1200
1248
1252
1248
1252
1320
1330
1330
1346
700
1202
1354
1352
1300

FIG. 31

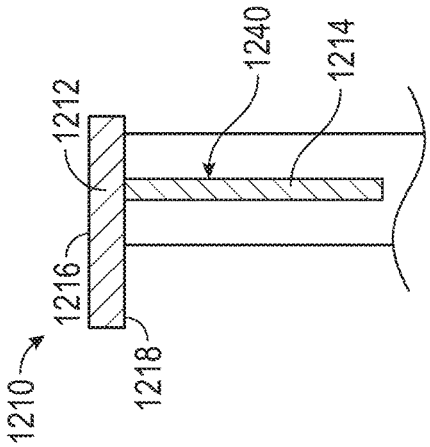

FIG. 34

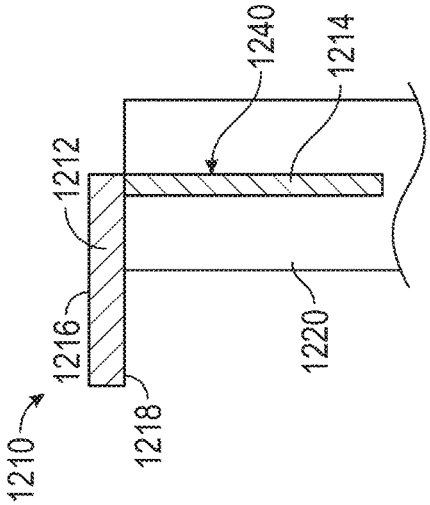

FIG. 33

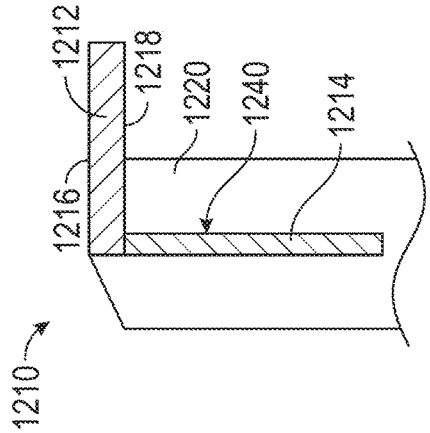

FIG. 32

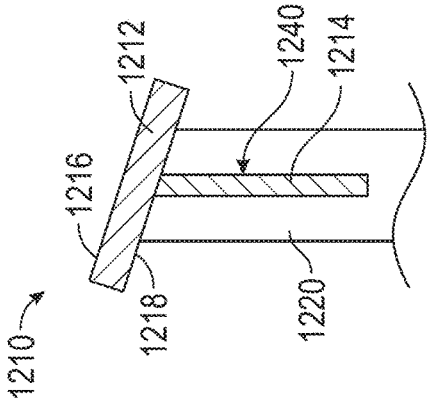

FIG. 38

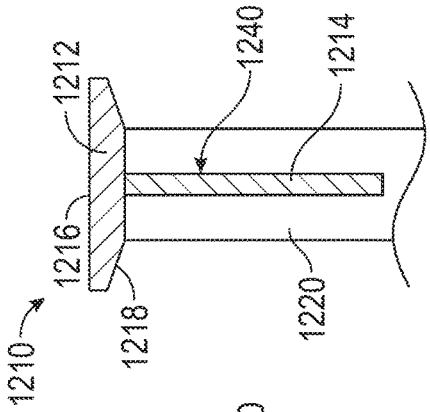

FIG. 37

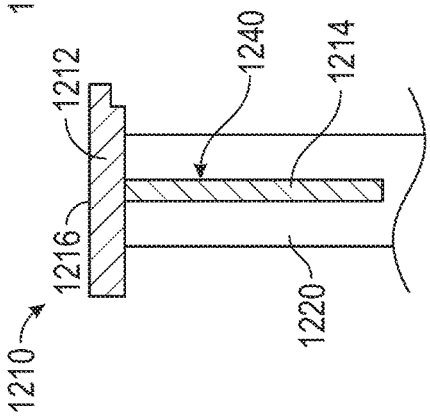

FIG. 36

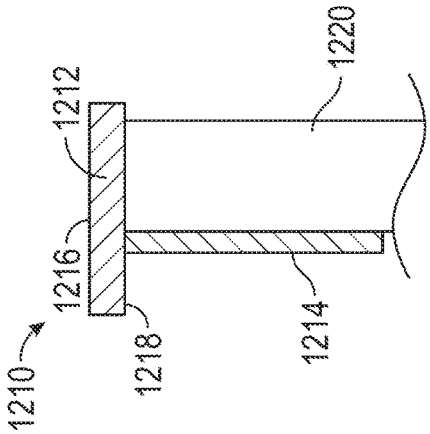

FIG. 35

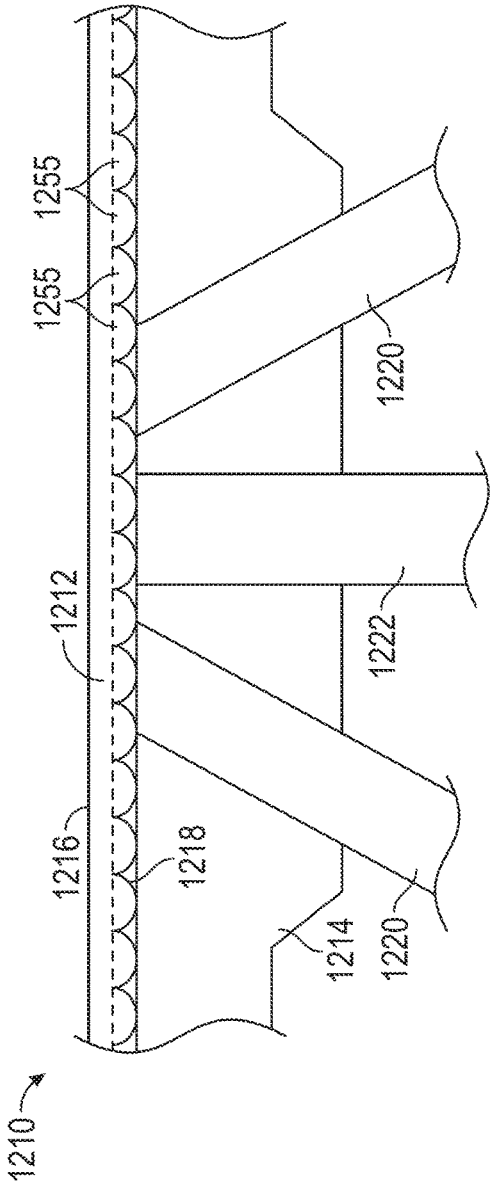
1210
1216
1218
1212
1255
1255
1214
1220
1222
1220

FIG. 39

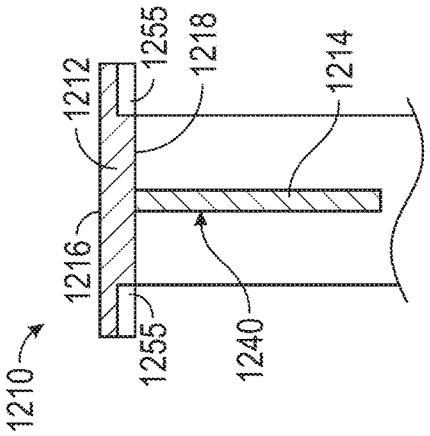
1210
1216
1212
1255
1218
1255
1240
1214

FIG. 40

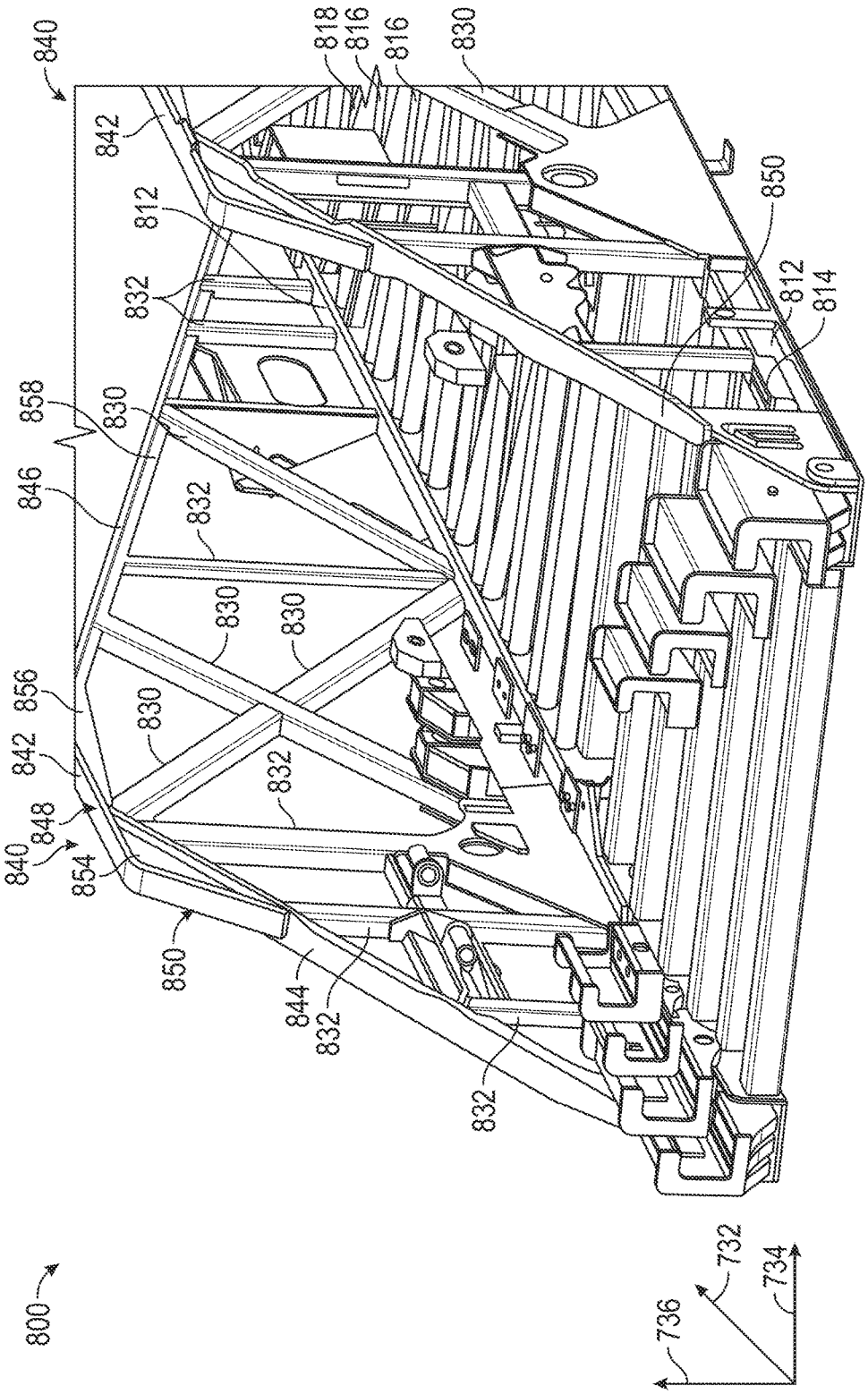
840
818
816
816
830
842
850
812
832
812
814
858
830
846
832
830
830
856
830
842
832
848
840
854
850
844
832
832
800
736
732
734

FIG. 41

AERIAL LADDER ASSEMBLY

CROSS-REFERENCE TO RELATED PATENT APPLICATIONS

This application (a) claims the benefit of U.S. Provisional Patent Application No. 62/661,419, filed Apr. 23, 2018, and (b) is related to (i) U.S. patent application Ser. No. 16/389,630, filed Apr. 19, 2019, which claims the benefit of U.S. Provisional Patent Application No. 62/661,382, filed Apr. 23, 2018, (ii) U.S. patent application Ser. No. 16/389,653, filed Apr. 19, 2019, which claims the benefit of U.S. Provisional Patent Application No. 62/661,420, filed Apr. 23, 2018, (iii) U.S. patent application Ser. No. 16/389,570, filed Apr. 19, 2019, which claims the benefit of U.S. Provisional Patent Application No. 62/661,384, filed Apr. 23, 2018, (iv) U.S. patent application Ser. No. 16/389,600, filed Apr. 19, 2019, which claims the benefit of U.S. Provisional Patent Application No. 62/661,414, filed Apr. 23, 2018, (v) U.S. patent application Ser. No. 16/389,176, filed Apr. 19, 2019, which claims the benefit of U.S. Provisional Patent Application No. 62/661,426, filed Apr. 23, 2018, (vi) U.S. patent application Ser. No. 16/389,029, filed Apr. 19, 2019, which claims the benefit of U.S. Provisional Patent Application No. 62/661,335, filed Apr. 23, 2018, and U.S. Provisional Patent Application No. 62/829,922, filed Apr. 5, 2019, and (vii) U.S. patent application Ser. No. 16/389,072, filed Apr. 19, 2019, which claims the benefit of U.S. Provisional Patent Application No. 62/661,330, filed Apr. 23, 2018, all of which are incorporated herein by reference in their entireties.

BACKGROUND

Certain types of fire apparatuses include aerial assemblies. These aerial assemblies typically include a turntable that is rotatably coupled to a chassis of the vehicle, and an aerial ladder assembly that is pivotably coupled to the turntable. The aerial ladder assembly includes multiple sections slidably coupled to one another such that the ladder assembly is extendable over a great distance. Accordingly, the aerial assembly may be actuated to move the distal end of the aerial ladder assembly throughout a working envelope, providing firefighters with access to distant locations that would not otherwise be accessible (e.g., an upper floor of a burning building, etc.).

The aerial ladder assembly is cantilevered off of the turntable. Specifically, a base section of the ladder assembly is pivtoably coupled to the turntable, and the other sections of the aerial ladder assembly are supported by the base section. In some configurations, a work basket is coupled to a distal end of the aerial ladder assembly. The work basket may support the weight of multiple firefighters, their equipment, and the work basket. Accordingly, the aerial ladder assembly can experience extreme bending stresses throughout operation. It is critical that the sections of the aerial ladder assembly are strong enough to withstand these stresses while remaining light enough that the weight of the distal sections do not compromise performance of the proximal sections.

SUMMARY

One embodiment relates to a fire apparatus. The fire apparatus includes a chassis, axles coupled to the chassis, a turntable rotatably coupled to the chassis, and an aerial ladder assembly pivotably coupled the turntable and including a ladder section. The ladder section includes a first base rail and a second base rail extending longitudinally, a plurality of ladder rungs extending between the first base rail and the second base rail, a top plate positioned above the first base rail, a series of lacing members coupled to the top plate and the first base rail, and a gusset plate coupled to the top plate and at least one of the lacing members. The top plate extends at least one of (a) laterally inward of the gusset plate and (b) laterally outward of the gusset plate. The top plate has a solid cross section.

Another embodiment relates to a ladder for an aerial assembly of a fire apparatus. The ladder includes a first base rail and a second base rail extending longitudinally, a plurality of ladder rungs extending between the first base rail and the second base rail, a top plate positioned above the first base rail, a plurality of lacing members coupled to the top plate and the first base rail, and a gusset plate coupled to the top plate and at least one of the lacing members. The top plate extends at least one of (a) laterally inward of the gusset plate and (b) laterally outward of the gusset plate. The top plate has a solid cross section.

Still another embodiment relates to a method of manufacturing an aerial ladder assembly for a fire apparatus. The method includes providing a first base rail and a second base rail laterally offset from one another, coupling a plurality of ladder rungs to both the first base rail and the second base rail, providing a hand rail above the first base rail, and coupling a plurality of lacing members to the first base rail. The hand rail includes a top plate having a top surface and a bottom surface and a gusset plate coupled to the bottom surface of the top plate. At least one of the lacing members engages the gusset plate. The top plate extends at least one of (a) laterally inward of the gusset plate and (b) laterally outward of the gusset plate. The top plate has a solid cross section.

This summary is illustrative only and is not intended to be in any way limiting. Other aspects, inventive features, and advantages of the devices or processes described herein will become apparent in the detailed description set forth herein, taken in conjunction with the accompanying figures, wherein like reference numerals refer to like elements.

BRIEF DESCRIPTION OF THE DRAWINGS

FIG. **1** is a left side view of a mid-mount fire apparatus, according to an exemplary embodiment.

FIG. **2** is a right side view of the mid-mount fire apparatus of FIG. **1**, according to an exemplary embodiment.

FIG. **3** is a top view of the mid-mount fire apparatus of FIG. **1**, according to an exemplary embodiment.

FIG. **4** is a bottom view of the mid-mount fire apparatus of FIG. **1**, according to an exemplary embodiment.

FIG. **5** is a rear view of the mid-mount fire apparatus of FIG. **1**, according to an exemplary embodiment.

FIG. **6** is a is a rear view of the mid-mount fire apparatus of FIG. **1** having outriggers in an extended configuration, according to an exemplary embodiment.

FIG. **7** is a front view of the mid-mount fire apparatus of FIG. **1** having outriggers in an extended configuration, according to an exemplary embodiment.

FIG. **8** is a side view of the mid-mount fire apparatus of FIG. **1** relative to a traditional mid-mount fire apparatus, according to an exemplary embodiment.

FIG. **9** is a side view of the mid-mount fire apparatus of FIG. **1** relative to a traditional rear-mount fire apparatus, according to an exemplary embodiment.

FIG. **10** is a rear perspective view of a rear assembly of the mid-mount fire apparatus of FIG. **1**, according to an exemplary embodiment.

FIG. **11** is detailed rear perspective view of the rear assembly of FIG. **10**, according to an exemplary embodiment.

FIG. **12** is another rear perspective view of the rear assembly of FIG. **10** without a ladder assembly, according to an exemplary embodiment.

FIG. **13** is a top view of the rear assembly of FIG. **12**, according to an exemplary embodiment

FIG. **14** is a perspective view of a torque box of the mid-mount fire apparatus of FIG. **1**, according to an exemplary embodiment.

FIG. **15** is a side view of the torque box of FIG. **14**, according to an exemplary embodiment.

FIG. **16** is a perspective view of an aerial ladder assembly and turntable of the mid-mount fire apparatus of FIG. **1**, according to an exemplary embodiment.

FIG. **17** is a side view of a pump housing of the mid-mount fire apparatus of FIG. **1** in a first configuration, according to an exemplary embodiment.

FIG. **18** is a side perspective view of a pump system within the pump housing of FIG. **17** in a second configuration, according to an exemplary embodiment

FIG. **19** is a side perspective view of the pump system of FIG. **18** with a platform in a deployed configuration, according to an exemplary embodiment.

FIGS. **20** and **21** are opposing side views of the pump system of FIG. **18**, according to an exemplary embodiment.

FIG. **22** is a side view of the aerial ladder assembly and turntable of FIG. **16**, according to an exemplary embodiment.

FIG. **23** is a perspective view of the aerial ladder assembly and turntable of FIG. **16**, according to an exemplary embodiment.

FIG. **24** is a perspective view of the aerial ladder assembly of FIG. **16**, according to an exemplary embodiment.

FIG. **25** is a rear view of the aerial ladder assembly of FIG. **16**, according to an exemplary embodiment.

FIG. **26** is a perspective view of a fly section of the aerial ladder assembly of FIG. **16**, according to an exemplary embodiment.

FIG. **27** is an exploded view of the fly section of FIG. **26**, according to an exemplary embodiment.

FIG. **28** is a section view of the aerial ladder assembly of FIG. **16**, according to an exemplary embodiment.

FIG. **29** is a section view of hand rail of the fly section of FIG. **26**, according to an exemplary embodiment.

FIG. **30** is a bottom rear perspective view of a work basket of the mid-mount fire apparatus of FIG. **1** and the aerial ladder assembly of FIG. **16**, according to an exemplary embodiment

FIG. **31** is a top rear perspective view of the work basket of FIG. **30** and the aerial ladder assembly of FIG. **16**, according to an exemplary embodiment.

FIGS. **32-38** are section views of a hand rail of the fly section of FIG. **26**, according to various exemplary embodiments.

FIG. **39** is a side view of a hand rail of the fly section of FIG. **26**, according to an exemplary embodiment.

FIG. **40** is a section view a hand rail of the fly section of FIG. **26**, according to an exemplary embodiment.

FIG. **41** is a perspective view of a base section of the aerial ladder assembly of FIG. **16**, according to an exemplary embodiment.

DETAILED DESCRIPTION

Before turning to the figures, which illustrate certain exemplary embodiments in detail, it should be understood that the present disclosure is not limited to the details or methodology set forth in the description or illustrated in the figures. It should also be understood that the terminology used herein is for the purpose of description only and should not be regarded as limiting.

According to an exemplary embodiment, a vehicle includes various components that improve performance relative to traditional systems. In one embodiment, the vehicle is a fire apparatus that includes an aerial ladder. The aerial ladder is coupled to the chassis and rotatable about an axis. The aerial ladder includes a series of ladder sections that can be extended and retracted relative to one another. The ladder sections each include a pair of base rails extending longitudinally, a series of ladder rungs coupling the base rails to one another, a pair of hand rails positioned above the base rails, and a series of lacing members coupling each hand rail to one of the base rails. Each hand rail includes a top plate extending laterally and a gusset plate extending vertically downward from a bottom surface of the top plate. The top plate extends a first distance in a longitudinal direction, and the corresponding gusset plate extends a second distance in the longitudinal direction. The second distance may be greater than the first distance such that the gusset plate extends along the entire length of the top plate. The lacing members each define a groove that receives the gusset plate, and the lacing members extend upward along the lateral sides of the gusset plates to engage the bottom surface of the top plate.

Overall Vehicle

According to the exemplary embodiment shown in FIGS. **1-21**, a vehicle, shown as fire apparatus **10**, is configured as a mid-mount quint fire truck having a tandem rear axle. A "quint" fire truck as used herein may refer to a fire truck that includes a water tank, an aerial ladder, hose storage, ground ladder storage, and a water pump. In other embodiments, the fire apparatus **10** is configured as a mid-mount quint fire truck having a single rear axle. A tandem rear axle may include two solid axle configurations or may include two pairs of axles (e.g., two pairs of half shafts, etc.) each having a set of constant velocity joints and coupling two differentials to two pairs of hub assemblies. A single rear axle chassis may include one solid axle configuration or may include one pair of axles each having a set of constant velocity joints and coupling a differential to a pair of hub assemblies, according to various alternative embodiments. In still other embodiments, the fire apparatus **10** is configured as a non-quint mid-mount fire truck having a single rear axle or a tandem rear axle. In yet other embodiments, the fire apparatus **10** is configured as a rear-mount, quint or non-quint, single rear axle or tandem rear axle, fire truck.

As shown in FIGS. **1-7**, **10-13**, **17**, and **18**, the fire apparatus **10** includes a chassis, shown as frame **12**, having longitudinal frame rails that define an axis, shown as longitudinal axis **14**, that extends between a first end, shown as front end **2**, and an opposing second end, shown as rear end **4**, of the fire apparatus **10**; a first axle, shown as front axle **16**, coupled to the frame **12**; one or more second axles, shown as rear axles **18**, coupled to the frame **12**; a first assembly, shown as front cabin **20**, coupled to and supported by the frame **12** and having a bumper, shown as front bumper **22**; a prime mover, shown as engine **60**, coupled to

and supported by the frame **12**; and a second assembly, shown as rear assembly **100**, coupled to and supported by the frame **12**.

As shown in FIGS. **1-7**, **10**, and **12**, the front axle **16** and the rear axles **18** include tractive assemblies, shown as wheel and tire assemblies **30**. As shown in FIGS. **1-4**, the front cabin **20** is positioned forward of the rear assembly **100** (e.g., with respect to a forward direction of travel for the fire apparatus **10** along the longitudinal axis **14**, etc.). According to an alternative embodiment, the cab assembly may be positioned behind the rear assembly **100** (e.g., with respect to a forward direction of travel for the fire apparatus **10** along the longitudinal axis **14**, etc.). The cab assembly may be positioned behind the rear assembly **100** on, by way of example, a rear tiller fire apparatus. In some embodiments, the fire apparatus **10** is a ladder truck with a front portion that includes the front cabin **20** pivotally coupled to a rear portion that includes the rear assembly **100**.

According to an exemplary embodiment, the engine **60** receives fuel (e.g., gasoline, diesel, etc.) from a fuel tank and combusts the fuel to generate mechanical energy. A transmission receives the mechanical energy and provides an output to a drive shaft. The rotating drive shaft is received by a differential, which conveys the rotational energy of the drive shaft to a final drive (e.g., the front axle **16**, the rear axles **18**, the wheel and tire assemblies **30**, etc.). The final drive then propels or moves the fire apparatus **10**. According to an exemplary embodiment, the engine **60** is a compression-ignition internal combustion engine that utilizes diesel fuel. In alternative embodiments, the engine **60** is another type of prime mover (e.g., a spark-ignition engine, a fuel cell, an electric motor, etc.) that is otherwise powered (e.g., with gasoline, compressed natural gas, propane, hydrogen, electricity, etc.).

As shown in FIGS. **1-7**, **10-13**, and **17-19**, the rear assembly **100** includes a body assembly, shown as body **110**, coupled to and supported by the frame **12**; a fluid driver, shown as pump system **200**, coupled to and supported by the frame **12**; a chassis support member, shown as torque box **300**, coupled to and supported by the frame **12**; a fluid reservoir, shown as water tank **400**, coupled to the body **110** and supported by the torque box **300** and/or the frame **12**; and an aerial assembly, shown as aerial assembly **500**, pivotally coupled to the torque box **300** and supported by the torque box **300** and/or the frame **12**. In some embodiments, the rear assembly **100** does not include the water tank **400**. In some embodiments, the rear assembly **100** additionally or alternatively includes an agent or foam tank (e.g., that receives and stores a fire suppressing agent, foam, etc.).

As shown in FIGS. **1**, **2**, and **10-12**, the sides of the body **110** define a plurality of compartments, shown as storage compartments **112**. The storage compartments **112** may receive and store miscellaneous items and gear used by emergency response personnel (e.g., helmets, axes, oxygen tanks, hoses, medical kits, etc.). As shown in FIGS. **5**, **6**, and **10-12**, the rear end **4** of the body **110** defines a longitudinal storage compartment that extends along the longitudinal axis **14**, shown as ground ladder compartment **114**. The ground ladder compartment **114** may receive and store one or more ground ladders. As shown in FIGS. **3**, **5**, and **10-13**, a top surface, shown as top platform **122**, of the body **110** defines a cavity, shown as hose storage platform **116**, and a channel, shown as hose chute **118**, extending from the hose storage platform **116** to the rear end **4** of the body **110**. The hose storage platform **116** may receive and store one or more hoses (e.g., up to 1,000 feet of 5 inch diameter hose, etc.), which may be pulled from the hose storage platform **116** though the hose chute **118**.

As shown in FIGS. **1-6** and **10-13**, the rear end **4** of the body **110** has notched or clipped corners, shown as chamfered corners **120**. In other embodiments, the rear end **4** of the body **110** does not have notched or clipped corners (e.g., the rear end **4** of the body **110** may have square corners, etc.). According to an exemplary embodiment, the chamfered corners **120** provide for increased turning clearance relative to fire apparatuses that have non-notched or non-clipped (e.g., square, etc.) corners. As shown in FIGS. **1-3**, **5**, **6**, and **10-13**, the rear assembly **100** includes a first selectively deployable ladder, shown as rear ladder **130**, coupled to each of the chamfered corners **120** of the body **110**. According to an exemplary embodiment, the rear ladders **130** are hingedly coupled to the chamfered corners **120** and repositionable between a stowed position (see, e.g., FIGS. **1-3**, **5**, **12**, **13**, etc.) and a deployed position (see, e.g., FIGS. **6**, **10**, **11**, etc.). The rear ladders **130** may be selectively deployed such that a user may climb the rear ladder **130** to access the top platform **122** of the body **110** and/or one or more components of the aerial assembly **500** (e.g., a work basket, an implement, an aerial ladder assembly, the hose storage platform **116**, etc.). In other embodiments, the body **110** has stairs in addition to or in place of the rear ladders **130**.

As shown in FIGS. **1**, **12**, **17**, and **18**, the rear assembly **100** includes a second selectively deployable ladder, shown as side ladder **132**, coupled to a side (e.g., a left side, a right side, a driver's side, a passenger's side, etc.) of the body **110**. In some embodiments, the rear assembly **100** includes two side ladders **132**, one coupled to each side of the body **110**. According to an exemplary embodiment, the side ladder **132** is hingedly coupled to the body **110** and repositionable between a stowed position (see, e.g., FIGS. **1**, **2**, **17**, **18**, etc.) and a deployed position. The side ladder **132** may be selectively deployed such that a user may climb the side ladder **132** to access one or more components of the aerial assembly **500** (e.g., a work platform, an aerial ladder assembly, a control console, etc.).

As shown in FIGS. **1**, **2**, **12** and **13**, the body **110** defines a recessed portion, shown as aerial assembly recess **140**, positioned (i) rearward of the front cabin **20** and (ii) forward of the water tank **400** and/or the rear axles **18**. The aerial assembly recess **140** defines an aperture, shown as pedestal opening **142**, rearward of the pump system **200**.

According to an exemplary embodiment the water tank **400** is coupled to the frame **12** with a superstructure (e.g., disposed along a top surface of the torque box **300**, etc.). As shown in FIGS. **1**, **2**, **12**, and **13**, the water tank **400** is positioned below the aerial ladder assembly **700** and forward of the hose storage platform **116**. As shown in FIGS. **1**, **2**, **12** and **13**, the water tank **400** is positioned such that the water tank **400** defines a rear wall of the aerial assembly recess **140**. In one embodiment, the water tank **400** stores up to 300 gallons of water. In another embodiment, the water tank **400** stores more than or less than 300 gallons of water (e.g., **100**, **200**, **250**, **350**, **400**, **500**, etc. gallons). In other embodiments, fire apparatus **10** additionally or alternatively includes a second reservoir that stores another firefighting agent (e.g., foam, etc.). In still other embodiments, the fire apparatus **10** does not include the water tank **400** (e.g., in a non-quint configuration, etc.).

As shown in FIGS. **1-3**, **5-7**, **10**, **17**, and **18**, the aerial assembly **500** includes a turntable assembly, shown as turntable **510**, pivotally coupled to the torque box **300**; a

platform, shown work platform **550**, coupled to the turntable **510**; a console, shown as control console **600**, coupled to the turntable **510**; a ladder assembly, shown as aerial ladder assembly **700**, having a first end (e.g., a base end, a proximal end, a pivot end, etc.), shown as proximal end **702**, pivotally coupled to the turntable **510**, and an opposing second end (e.g., a free end, a distal end, a platform end, an implement end, etc.), shown as distal end **704**; and an implement, shown as work basket **1300**, coupled to the distal end **704**.

As shown in FIGS. **1**, **2**, **4**, **14**, and **15**, the torque box **300** is coupled to the frame **12**. In one embodiment, the torque box **300** extends laterally the full width between the lateral outsides of the frame rails of the frame **12**. As shown in FIGS. **14** and **15**, the torque box **300** includes a body portion, shown as body **302**, having a first end, shown as front end **304**, and an opposing second end, shown as rear end **306**. As shown in FIGS. **12**, **14**, and **15**, the torque box **300** includes a support, shown as pedestal **308**, coupled (e.g., attached, fixed, bolted, welded, etc.) to the front end **304** of the torque box **300**. As shown in FIG. **12**, the pedestal **308** extends through the pedestal opening **142** into the aerial assembly recess **140** such that the pedestal **308** is positioned (i) forward of the water tank **400** and the rear axles **18** and (ii) rearward of pump system **200**, the front axle **16**, and the front cabin **20**.

According to the exemplary embodiment shown in FIGS. **1**, **2**, and **12**, the aerial assembly **500** (e.g., the turntable **510**, the work platform **550**, the control console **600**, the aerial ladder assembly **700**, the work basket **1300**, etc.) is rotatably coupled to the pedestal **308** such that the aerial assembly **500** is selectively repositionable into a plurality of operating orientations about a vertical axis, shown as vertical pivot axis **40**. As shown in FIGS. **12**, **14**, and **15**, the torque box **300** includes a pivotal connector, shown as slewing bearing **310**, coupled to the pedestal **308**. The slewing bearing **310** is a rotational rolling-element bearing with an inner element, shown as bearing element **312**, and an outer element, shown as driven gear **314**. The bearing element **312** may be coupled to the pedestal **308** with a plurality of fasteners (e.g., bolts, etc.).

As shown in FIGS. **14** and **15**, a drive actuator, shown as rotation actuator **320**, is coupled to the pedestal **308** (e.g., by an intermediate bracket, etc.). The rotation actuator **320** is positioned to drive (e.g., rotate, turn, etc.) the driven gear **314** of the slewing bearing **310**. In one embodiment, the rotation actuator **320** is an electric motor (e.g., an alternating current (AC) motor, a direct current motor (DC), etc.) configured to convert electrical energy into mechanical energy. In other embodiments, the rotation actuator **320** is powered by air (e.g., pneumatic, etc.), a fluid (e.g., a hydraulic motor, a hydraulic cylinder, etc.), mechanically (e.g., a flywheel, etc.), or still another power source.

As shown in FIGS. **14** and **15**, the rotation actuator **320** includes a driver, shown as drive pinion **322**. The drive pinion **322** is mechanically coupled with the driven gear **314** of the slewing bearing **310**. In one embodiment, a plurality of teeth of the drive pinion **322** engage a plurality of teeth on the driven gear **314**. By way of example, when the rotation actuator **320** is engaged (e.g., powered, turned on, etc.), the rotation actuator **320** may provide rotational energy (e.g., mechanical energy, etc.) to an output shaft. The drive pinion **322** may be coupled to the output shaft such that the rotational energy of the output shaft drives (e.g., rotates, etc.) the drive pinion **322**. The rotational energy of the drive pinion **322** may be transferred to the driven gear **314** in response to the engaging teeth of both the drive pinion **322** and the driven gear **314**. The driven gear **314** thereby rotates about the vertical pivot axis **40**, while the bearing element **312** remains in a fixed position relative to the driven gear **314**.

As shown in FIGS. **1**, **2**, and **16-18**, the turntable **510** includes a first portion, shown as rotation base **512**, and a second portion, shown as side supports **514**, that extend vertically upward from opposing lateral sides of the rotation base **512**. According to an exemplary embodiment, (i) the work platform **550** is coupled to the side supports **514**, (ii) the aerial ladder assembly **700** is pivotally coupled to the side supports **514**, (iii) the control console **600** is coupled to the rotation base **512**, and (iv) the rotation base **512** is disposed within the aerial assembly recess **140** and interfaces with and is coupled to the driven gear **314** of slewing bearing **310** such that (i) the aerial assembly **500** is selectively pivotable about the vertical pivot axis **40** using the rotation actuator **320**, (ii) at least a portion of the work platform **550** and the aerial ladder assembly **700** is positioned below the roof of the front cabin **20**, and (iii) the turntable **510** is coupled rearward of the front cabin **20** and between the front axle **16** and the tandem rear axles **18** (e.g., the turntable **510** is coupled to the frame **12** such that the vertical pivot axis **40** is positioned rearward of a centerline of the front axle **16**, forward of a centerline of the tandem rear axle **18**, rearward of a rear edge of a tire of the front axle **16**, forward of a front edge of a wheel of the front axle of the tandem rear axles **18**, rearward of a front edge of a tire of the front axle **16**, forward of a rear edge of a wheel of the rear axle of the tandem rear axles **18**, etc.). Accordingly, loading from the work basket **1300**, the aerial ladder assembly **700**, and/or the work platform **550** may transfer through the turntable **510** into the torque box **300** and the frame **12**.

As shown in FIG. **12**, the rear assembly **100** includes a rotation swivel, shown as rotation swivel **316**, that includes a conduit. According to an exemplary embodiment, the conduit of the rotation swivel **316** extends upward from the pedestal **308** and into the turntable **510**. The rotation swivel **316** may couple (e.g., electrically, hydraulically, fluidly, etc.) the aerial assembly **500** with other components of the fire apparatus **10**. By way of example, the conduit may define a passageway for water to flow into the aerial ladder assembly **700**. Various lines may provide electricity, hydraulic fluid, and/or water to the aerial ladder assembly **700**, actuators, and/or the control console **600**.

According to an exemplary embodiment, the work platform **550** provides a surface upon which operators (e.g., fire fighters, rescue workers, etc.) may stand while operating the aerial assembly **500** (e.g., with the control console **600**, etc.). The control console **600** may be communicably coupled to various components of the fire apparatus **10** (e.g., actuators of the aerial ladder assembly **700**, rotation actuator **320**, water turret, etc.) such that information or signals (e.g., command signals, fluid controls, etc.) may be exchanged from the control console **600**. The information or signals may relate to one or more components of the fire apparatus **10**. According to an exemplary embodiment, the control console **600** enables an operator (e.g., a fire fighter, etc.) of the fire apparatus **10** to communicate with one or more components of the fire apparatus **10**. By way of example, the control console **600** may include at least one of an interactive display, a touchscreen device, one or more buttons (e.g., a stop button configured to cease water flow through a water nozzle, etc.), joysticks, switches, and voice command receivers. An operator may use a joystick associated with the control console **600** to trigger the actuation of the turntable **510** and/or the aerial ladder assembly **700** to a desired angular position (e.g., to the front, back, or side of fire

apparatus **10**, etc.). By way of another example, an operator may engage a lever associated with the control console **600** to trigger the extension or retraction of the aerial ladder assembly **700**.

As shown in FIG. **16**, the aerial ladder assembly **700** has a plurality of nesting ladder sections that telescope with respect to one another including a first section, shown as base section **800**; a second section, shown as lower middle section **900**; a third ladder section, shown as middle section **1000**; a fourth section, shown as upper middle section **1100**; and a fifth section, shown as fly section **1200**. As shown in FIGS. **16** and **17**, the side supports **514** of the turntable **510** define a first interface, shown as ladder interface **516**, and a second interface, shown as actuator interface **518**. As shown in FIG. **16**, the base section **800** of the aerial ladder assembly **700** defines first interfaces, shown as pivot interfaces **802**, and second interfaces, shown as actuator interfaces **804**. As shown in FIGS. **16** and **17**, the ladder interfaces **516** of the side supports **514** of the turntable **510** and the pivot interfaces **802** of the base section **800** are positioned to align and cooperatively receive a pin, shown as heel pin **520**, to pivotally couple the proximal end **702** of the aerial ladder assembly **700** to the turntable **510**. As shown in FIG. **17**, the aerial ladder assembly **700** includes first ladder actuators or linear actuators (e.g., hydraulic cylinders, etc.), shown as pivot actuators **710**. Each of the pivot actuators **710** has a first end portion, shown as end **712**, coupled to a respective actuator interface **518** of the side supports **514** of the turntable **510** and an opposing second end portion, shown as end **714**, coupled to a respective actuator interface **804** of the base section **800**. According to an exemplary embodiment, the pivot actuators **710** are kept in tension such that retraction thereof lifts and rotates the distal end **704** of the aerial ladder assembly **700** about a lateral axis, shown as lateral pivot axis **42**, defined by the heel pin **520**. In other embodiments, the pivot actuators **710** are kept in compression such that extension thereof lifts and rotates the distal end **704** of the aerial ladder assembly **700** about the lateral pivot axis **42**. In an alternative embodiment, the aerial ladder assembly only includes one pivot actuator **710**.

As shown in FIG. **16**, the aerial ladder assembly **700** includes one or more second ladders actuators, shown as extension actuators **720**. According to an exemplary embodiment, the extension actuators **720** are positioned to facilitate selectively reconfiguring the aerial ladder assembly **700** between an extended configuration and a retracted/stowed configuration (see, e.g., FIGS. **1-3**, **16**, etc.). In the extended configuration (e.g., deployed position, use position, etc.), the aerial ladder assembly **700** is lengthened, and the distal end **704** is extended away from the proximal end **702**. In the retracted configuration (e.g., storage position, transport position, etc.), the aerial ladder assembly **700** is shortened, and the distal end **704** is withdrawn towards the proximal end **702**.

According to the exemplary embodiment shown in FIGS. **1-3** and **16**, the aerial ladder assembly **700** has over-retracted ladder sections such that the proximal ends of the lower middle section **900**, the middle section **1000**, the upper middle section **1100**, and the fly section **1200** extend forward of (i) the heel pin **520** and (ii) the proximal end of the base section **800** along the longitudinal axis **14** of the fire apparatus **10** when the aerial ladder assembly **700** is retracted and stowed. According to an exemplary embodiment, the distal end **704** of the aerial ladder assembly **700** (e.g., the distal end of the fly section **1200**, etc.) is extensible to the horizontal reach of at least 88 feet (e.g., 93 feet, etc.) and/or or a vertical reach of at least 95 feet (e.g., 100 feet, etc.). According to an exemplary embodiment, the aerial ladder assembly **700** is operable below grade (e.g., at a negative depression angle relative to a horizontal, etc.) within an aerial work envelope or scrub area. In one embodiment, the aerial ladder assembly **700** is operable in the scrub area such that it may pivot about the vertical pivot axis **40** up to 50 degrees (e.g., 20 degrees forward and 30 degrees rearward from a position perpendicular to the longitudinal axis **14**, etc.) on each side of the body **110** while at a negative depression angle (e.g., up to negative 15 degrees, more than negative 15 degrees, up to negative 20 degrees, etc. below level, below a horizontal defined by the top platform **122** of the body **110**, etc.).

According to an exemplary embodiment, the work basket **1300** is configured to hold at least one of fire fighters and persons being aided by the fire fighters. As shown in FIGS. **3**, **5**, and **10**, the work basket **1300** includes a platform, shown as basket platform **1310**; a support, shown as railing **1320**, extending around the periphery of the basket platform **1310**; and angled doors, shown as basket doors **1330**, coupled to the corners of the railing **1320** proximate the rear end **4** of the fire apparatus **10**. According to an exemplary embodiment, the basket doors **1330** are angled to correspond with the chamfered corners **120** of the body **110**.

In other embodiments, the aerial assembly **500** does not include the work basket **1300**. In some embodiments, the work basket **1300** is replaced with or additionally includes a nozzle (e.g., a deluge gun, a water cannon, a water turret, etc.) or other tool. By way of example, the nozzle may be connected to a water source (e.g., the water tank **400**, an external source, etc.) with a conduit extending along the aerial ladder assembly **700** (e.g., along the side of the aerial ladder assembly **700**, beneath the aerial ladder assembly **700**, in a channel provided in the aerial ladder assembly **700**, etc.). By pivoting the aerial ladder assembly **700** into a raised position, the nozzle may be elevated to expel water from a higher elevation to facilitate suppressing a fire.

According to an exemplary embodiment, the pump system **200** (e.g., a pump house, etc.) is a mid-ship pump assembly. As shown in FIGS. **1**, **2**, **12**, **17**, and **18**, the pump system **200** is positioned along the rear assembly **100** behind the front cabin **20** and forward of the vertical pivot axis **40** (e.g., forward of the turntable **510**, the torque box **300**, the pedestal **308**, the slewing bearing **310**, the heel pin **520**, a front end of the body **110**, etc.) such that the work platform **550** and the over-retracted portions of the aerial ladder assembly **700** overhang above the pump system **200** when the aerial ladder assembly **700** is retracted and stowed. According to an exemplary embodiment, the position of the pump system **200** forward of the vertical pivot axis **40** facilitates ease of install and serviceability. In other embodiments, the pump system **200** is positioned rearward of the vertical pivot axis **40**.

As shown in FIGS. **17-21**, the pump system **200** includes a housing, shown as pump house **202**. As shown in FIG. **17**, the pump house **202** includes a selectively openable door, shown as pump door **204**. As shown in FIGS. **18-21**, the pump system **200** includes a pumping device, shown as pump assembly **210**, disposed within the pump house **202**. By way of example, the pump assembly **210** may include a pump panel having an inlet for the entrance of water from an external source (e.g., a fire hydrant, etc.), a pump, an outlet configured to engage a hose, various gauges, etc. The pump of the pump assembly **210** may pump fluid (e.g., water, agent, etc.) through a hose to extinguish a fire (e.g., water received at an inlet of the pump house **202**, water stored in the water tank **400**, etc.). As shown in FIGS. **19-21**, the pump system **200** includes a selectively deployable (e.g.,

foldable, pivotable, collapsible, etc.) platform, shown as pump platform **220**, pivotally coupled to the pump house **202**. As shown in FIGS. **20** and **21**, the pump platform **220** is in a first configuration, shown as stowed configuration **222**, and as shown in FIG. **19**, the pump platform **220** is in a second configuration, shown as deployed configuration **224**.

As shown in FIGS. **1**, **2**, **4**, **6**, **7**, **10-12**, **14**, and **15**, the fire apparatus **10** includes a stability system, shown as stability assembly **1400**. As shown in FIGS. **1**, **2**, **4**, and **7**, the stability assembly **1400** includes first stabilizers, shown as front downriggers **1500**, coupled to each lateral side of the front bumper **22** at the front end **2** of the front cabin **20**. In other embodiments, the front downriggers **1500** are otherwise coupled to the fire apparatus **10** (e.g., to the front end **2** of the frame **12**, etc.). According to an exemplary embodiment, the front downriggers **1500** are selectively deployable (e.g., extendable, etc.) downward to engage a ground surface. As shown in FIGS. **1**, **2**, **4-6**, **10-12**, **14**, and **15**, the stability assembly **1400** includes second stabilizers, shown as rear downriggers **1600**, coupled to each lateral side of the rear end **4** of the frame **12** and/or the rear end **306** of the torque box **300**. According to an exemplary embodiment, the rear downriggers **1600** are selectively deployable (e.g., extendable, etc.) downward to engage a ground surface. As shown in FIGS. **1**, **2**, **4**, **6**, **7**, **10**, **12**, **14**, **15**, **17**, and **18**, the stability assembly **1400** includes third stabilizers, shown outriggers **1700**, coupled to the front end **304** of the torque box **300** between the pedestal **308** and the body **302**. As shown in FIGS. **6** and **7**, the outriggers **1700** are selectively deployable (e.g., extendable, etc.) outward from each of the lateral sides of the body **110** and/or downward to engage a ground surface. According to an exemplary embodiment, the outriggers **1700** are extendable up to a distance of eighteen feet (e.g., measured between the center of a pad of a first outrigger and the center of a pad of a second outrigger, etc.). In other embodiments, the outriggers **1700** are extendable up to a distance of less than or greater than eighteen feet.

According to an exemplary embodiment, the front downriggers **1500**, the rear downriggers **1600**, and the outriggers **1700** are positioned to transfer the loading from the aerial ladder assembly **700** to the ground. For example, a load applied to the aerial ladder assembly **700** (e.g., a fire fighter at the distal end **704**, a wind load, etc.) may be conveyed into to the turntable **510**, through the pedestal **308** and the torque box **300**, to the frame **12**, and into the ground through the front downriggers **1500**, the rear downriggers **1600**, and/or the outriggers **1700**. When the front downriggers **1500**, the rear downriggers **1600**, and/or the outriggers **1700** engage with a ground surface, portions of the fire apparatus **10** (e.g., the front end **2**, the rear end **4**, etc.) may be elevated relative to the ground surface. One or more of the wheel and tire assemblies **30** may remain in contact with the ground surface, but may not provide any load bearing support. While the fire apparatus **10** is being driven or not in use, the front downriggers **1500**, the rear downriggers **1600**, and the outriggers **1700** may be retracted into a stored position.

According to an exemplary embodiment, with (i) the front downriggers **1500**, the rear downriggers **1600**, and/or the outriggers **1700** extended and (ii) the aerial ladder assembly **700** fully extended (e.g., at a horizontal reach of 88 feet, at a vertical reach of 95 feet, etc.), the fire apparatus **10** withstands a rated tip load (e.g., rated meaning that the fire apparatus **10** can, from a design-engineering perspective, withstand a greater tip load, with an associated factor of safety of at least two, meets National Fire Protection Association ("NFPA") requirements, etc.) of at least 1,000 pounds applied to the work basket **1300**, in addition to the weight of the work basket **1300** itself (e.g., approximately 700 pounds, etc.). In embodiments where the aerial assembly **500** does not include the work basket **1300**, the fire apparatus **10** may have a rated tip load of more than 1,000 pounds (e.g., 1,250 pounds, etc.) when the aerial ladder assembly **700** is fully extended.

According to an exemplary embodiment, the tandem rear axles **18** have a gross axle weight rating of up to 48,000 pounds and the fire apparatus **10** does not exceed the 48,000 pound tandem-rear axle rating. The front axle **16** may have a 24,000 pound axle rating. Traditionally, mid-mount fire trucks have greater than a 48,000 pound loading on the tandem rear-axles thereof. However, some state regulations prevent vehicles having such a high axle loading, and, therefore, the vehicles are unable to be sold and operated in such states. Advantageously, the fire apparatus **10** of the present disclosure has a gross axle weight loading of at most 48,000 pounds on the tandem rear axles **18**, and, therefore, the fire apparatus **10** may be sold and operated in any state of the United States.

As shown in FIGS. **5** and **9**, the fire apparatus **10** has a height H. According to an exemplary embodiment, the height H of the fire apparatus **10** is at most 128 inches (i.e., 10 feet, 8 inches). In other embodiments, the fire apparatus **10** has a height greater than 128 inches. As shown in FIGS. **8** and **9**, the fire apparatus **10** has a longitudinal length L. According to an exemplary embodiment, the longitudinal length L of the fire apparatus **10** is at most 502 inches (i.e., 41 feet, 10 inches). In other embodiments, the fire apparatus **10** has a length L greater than 502 inches. As shown in FIGS. **8** and **9**, the fire apparatus **10** has a distance D_1 between the rear end **4** of the body **110** and the middle of the tandem rear axles **18** (e.g., a body rear overhang portion, etc.). According to an exemplary embodiment, the distance D_1 of the fire apparatus **10** is at most 160 inches (i.e., 13 feet, 4 inches). In other embodiments, the fire apparatus **10** has a distance D_1 greater than 160 inches. As shown in FIGS. **8** and **9**, the fire apparatus **10** has a distance D_2 between the front end **2** of the front cabin **20** (excluding the front bumper **22**) and the middle of the tandem rear axles **18**. According to an exemplary embodiment, the distance D_2 of the fire apparatus **10** is approximately twice or at least twice that of the distance D_1 (e.g., approximately 321 inches, approximately 323 inches, at least 320 inches, etc.).

As shown in FIG. **8**, the longitudinal length L of the fire apparatus **10** is compared to the longitudinal length L' of a traditional mid-mount fire apparatus **10'**. As shown in FIG. **8**, when the front axles of the fire apparatus **10** and the fire apparatus **10'** are aligned, the fire apparatus **10'** extends beyond the longitudinal length L of the fire apparatus **10** a distance Δ'. The distance Δ' may be approximately the same as the amount of the body **110** rearward of the tandem rear axles **18** of the fire apparatus **10** such that the amount of body rearward of the tandem rear axle of the fire apparatus **10'** is approximately double that of the fire apparatus **10**. Decreasing the amount of the body **110** rearward of the tandem rear axles **18** improves drivability and maneuverability, and substantially reduces the amount of damage that fire departments may inflict on public and/or private property throughout a year of operating their fire trucks.

One solution to reducing the overall length of a fire truck is to configure the fire truck as a rear-mount fire truck with the ladder assembly overhanging the front cabin (e.g., in order to provide a ladder assembly with comparable extension capabilities, etc.). As shown in FIG. **9**, the longitudinal length L of the fire apparatus **10** is compared to the longi-

tudinal length L' of a traditional rear-mount fire apparatus **10"**. As shown in FIG. **9**, when the front axles of the fire apparatus **10** and the fire apparatus **10"** are aligned, the ladder assembly of the fire apparatus **10"** extends beyond the longitudinal length L of the fire apparatus **10** a distance Δ" such that the ladder assembly overhangs past the front cabin. Overhanging the ladder assembly reduces driver visibility, as well as rear-mount fire trucks do not provide as much freedom when arriving at a scene on where and how to position the truck, which typically requires the truck to be reversed into position to provide the desired amount of reach (e.g., which wastes valuable time, etc.). Further, the height H" of the fire apparatus **10"** is required to be higher than the height H of the fire apparatus **10** (e.g., by approximately one foot, etc.) so that the ladder assembly of the fire apparatus **10"** can clear the front cabin thereof.

Aerial Ladder Assembly Structure

Referring to FIGS. **16**, **22**, and **23**, each extension actuator **720** is part of a cable control assembly **722**. As the extension actuator **720** extends and retracts, a cable **724** is pulled into and/or payed out of the cable control assembly **722**. The cables **724** extend along each of the base section **800**, the lower middle section **900**, the middle section **1000**, the upper middle section **1100**, and the fly section **1200** between a series of pulleys **726**. The pulleys **726** are rotatably coupled to the base section **800**, the lower middle section **900**, the middle section **1000**, the upper middle section **1100**, and the fly section **1200**. As the cable control assembly **722** pulls the cable **724** in and pays/or out the cable **724**, the cable **724** exerts forces on the pulleys **726**, which forces the aerial ladder assembly **700** to extend or retract. The cable control assemblies **722**, the cables **724**, and the pulleys **726** actively control both the extension and retraction of the aerial ladder assembly **700** such that the aerial ladder assembly **700** can extend and retract independent of the force of gravity.

Referring to FIGS. **24-28**, a longitudinal axis **732**, a lateral axis **734**, and a vertical axis **736** are defined with respect to the aerial ladder assembly **700**. A center plane **738** is defined perpendicular to the lateral axis **734** (i.e., parallel to the longitudinal axis **732** and the vertical axis **736**). The center plane **738** is laterally centered with respect to the aerial ladder assembly **700** (e.g., with respect to each ladder section of the aerial ladder assembly **700**).

Referring to FIGS. **26** and **27**, the fly section **1200** is shown according to an exemplary embodiment. The fly section **1200** includes a pair of support members, shown as base rails **1202**. The base rails **1202** extend longitudinally (i.e., parallel to the longitudinal axis **732**) and are laterally offset from one another. The base rails **1202** are symmetrically arranged about the center plane **738**. As shown, the base rails **1202** are tubular members each having a square cross section. In other embodiments, the base rails **1202** have other cross sectional shapes (e.g., C-channel, circular, rectangular, etc.). Further alternatively, the base rails **1202** may be made from one or more members (e.g., tubular members, C-channels, rectangular sections, etc.) coupled to one or more plates. The ends of the base rails **1202** may be capped (e.g., a plate welded over the open end) to prevent debris from entering the base rails **1202**. Each base rail **1202** defines a pair of apertures **1204** that extend from an outer surface of the base rail **1202** to an interior volume of the base rail **1202**. The apertures **1204** are arranged near opposite ends of the fly section **1200**. The cables **724** may pass through one aperture **1204**, through the interior volume of the base rail **1202**, and out through the other aperture **1204**. This arrangement reduces the length of the cable **724** that is exposed, reducing the chances of an operator or piece of equipment being caught by the cables **724**. In other embodiments, other components extend through the apertures **1204** and into the base rail **1202**, such as wires or hoses.

The fly section **1200** further includes a series of structural members or steps, shown as ladder rungs **1206**, that extend between the base rails **1202**. As shown, the ladder rungs **1206** are tubular members each having a round cross section. The ladder rungs **1206** are fixedly coupled to both base rails **1202**, thereby indirectly fixedly coupling the base rails **1202** together. The ladder rungs **1206** are configured to act as steps to support the weight of operators and their equipment as the operators ascend or descend the aerial ladder assembly **700**. The fly section **1200** further includes support members, shown as ladder rung supports **1208**. The ladder rung supports **1208** extend between one of the base rails **1202** and one of the ladder rungs **1206** at an angle relative to the base rails **1202** (e.g., 30 degrees, 45 degrees, etc.). Each ladder rung support **1208** is fixedly coupled to one of the base rails **1202** and one of the ladder rungs **1206**. Each ladder rung **1206** engages a pair of ladder rung supports **1208**. The ladder rung supports **1208** extend below the corresponding ladder rung **1206** when the aerial ladder assembly **700** is raised. Accordingly, the ladder rung supports **1208** help to support the downward weight of the operators and their equipment. In other embodiments, the ladder rungs **1206** and/or the ladder rung supports **1208** have other cross sectional shapes (e.g., C-channel, square, rectangular, etc.).

Referring to FIGS. **26-29**, the fly section **1200** further includes a pair of hand rails **1210** extending longitudinally. Each hand rail **1210** is positioned above and laterally aligned with one of the base rails **1202**. The hand rails **1210** are symmetrically arranged about the center plane **738**. Each hand rail **1210** includes a rail, horizontal member, top member, or structural member, shown as top plate **1212**, and a vertical member, center member, or structural member, shown as gusset plate **1214**. The top plate **1212** has a solid cross section. Accordingly, the top plate **1212** is not a tubular member. As shown in FIG. **29**, the top plate **1212** defines a top surface **1216** and a bottom surface **1218**. The gusset plate **1214** engages and is fixedly coupled to the bottom surface **1218**. In some embodiments, the top surface **1216** and the bottom surface **1218** extend horizontally (i.e., parallel to the longitudinal axis **732** and the lateral axis **734**). The gusset plate **1214** extends vertically (e.g., parallel to the center plane **738**).

Referring to FIGS. **26-28**, the fly section **1200** includes a series of structural members, shown as angled lacing members **1220** and vertical lacing members **1222**, extending between each base rail **1202** and the corresponding hand rail **1210**. The angled lacing members **1220** and the vertical lacing members **1222** are each tubular members. In other embodiments, the angled lacing members **1220** and/or the vertical lacing members **1222** have a solid cross section. The angled lacing members **1220** and the vertical lacing members **1222** may have rectangular cross sections, circular cross sections, or other types of cross sections. The angled lacing members **1220** and the vertical lacing members **1222** extend within a plane parallel to the center plane **738**. The angled lacing members **1220** are oriented at an angle relative to the longitudinal axis **732** (e.g., 30 degrees, 45 degrees, 60 degrees, etc.). The vertical lacing members **1222** extend perpendicular to the longitudinal axis **732** and engage the hand rail **1210** between the angled lacing members **1220**. The angled lacing members **1220** and the vertical lacing members **1222** are fixedly coupled to the base rails **1202** and the hand rails **1210**. Accordingly, each base rail **1202**, the

corresponding hand rail **1210**, the corresponding angled lacing members **1220**, and the corresponding vertical lacing members **1222** form a truss structure that resists bending about a lateral axis.

The angled lacing members **1220** and the vertical lacing members **1222** each engage the corresponding base rail **1202** at a bottom end. As shown in FIG. **25**, the base rails **1202** extend farther laterally outward than (i.e., farther from the center plane **738** than) the angled lacing members **1220** and the vertical lacing members **1222**. The bottom ends of some of the angled lacing members **1220** define a channel, slot, or groove that receives a support member, shown as gusset plate **1224**. Specifically, pairs of the angled lacing members **1220** meet at the base rail **1202**, and the gusset plate **1224** extends upward from the base rail **1202** into the grooves defined by the angled lacing members **1220**. Each gusset plate **1224** is fixedly coupled to the base rail **1202** and the corresponding angled lacing members **1220**. A series of support members, shown as gusset plates **1226**, extend between an outer surface one of the vertical lacing members **1222** and the base rail **1202**. Each gusset plate **1226** is fixedly coupled to the base rail **1202** and the corresponding vertical lacing member **1222**. The gusset plates **1224** and the gusset plates **1226** increase the strength of the fly section **1200**.

The fly section **1200** further includes a structural assembly, shown as pulley support assembly **1228**. The pulley support assembly **1228** includes a pair of support members, shown as vertical supports **1230**, that each extend between and fixedly couple to the base rail **1202** and one of the angled lacing members **1220**. Each vertical support **1230** is coupled to a protrusion, shown as boss **1232**. The bosses **1232** each define an aperture **1234** that extends longitudinally therethrough. The bosses **1232** are configured to support one of the pulleys **726**. By way of example, a bracket that supports one of the pulleys **726** may extend into the apertures **1234**.

Referring to FIGS. **26-29**, the angled lacing members **1220** and the vertical lacing members **1222** each engage the hand rail **1210** at a top end. Specifically, the angled lacing members **1220** and the vertical lacing members **1222** each define a channel, slot, or groove **1240** that receives the gusset plate **1214**. Accordingly, the angled lacing members **1220** and the vertical lacing members **1222** each extend both laterally inward of (i.e., closer to the center plane **738** than) and laterally outward of (i.e., farther from the center plane **738** than) the gusset plate **1214**. The angled lacing members **1220** and the vertical lacing members **1222** may engage the gusset plate **1214** along the entire surface of the groove **1240**. The angled lacing members **1220** and the vertical lacing members **1222** extend upward along the gusset plate **1214** until the angled lacing members **1220** and the vertical lacing members **1222** engage the bottom surface **1218** of the top plate **1212**. The angled lacing members **1220** and the vertical lacing members **1222** are directly fixedly coupled to both the gusset plate **1214** and the top plate **1212**. In another embodiment, one or more of the structural members of the aerial ladder assembly **700** (e.g., the angled lacing members **1220**, the vertical lacing members **1222**, etc.) do not extend to the respective a rail, horizontal member, top member, or structural member (e.g., top plate **1212**, etc.). By way of example, the structural member(s) may be coupled to the respective support member(s) (e.g., gusset plate **1214**, etc.), and the support member may be coupled to the rail, horizontal member, top member, or structural member, but the structural member(s) may terminate in one or more locations that are spaced from the rail, horizontal member, top member, or structural member.

The base rails **1202** extend a first length A_1 in the longitudinal direction. The top plates **1212** extend a second length A_2 in the longitudinal direction. The length A_2 is less than the length A_1. The gusset plates **1214** extend a third length A_3 in the longitudinal direction. The length A_3 is greater than the length A_2. Accordingly, the gusset plates **1214** extend along the entire length of the top plates **1212**. This facilitates a connection between the top plate **1212** and the gusset plate **1214** that extends along the entire length of the top plate **1212**, increasing the strength of the hand rail **1210**. In other embodiments, each hand rail **1210** includes multiple gusset plates **1214** arranged sequentially along the length of the fly section **1200**. In such an embodiment, the length A_3 may be less than the length A_2. By way of example, the length A_3 may be 25%, 50% or 75% of the length A_2.

A height of the gusset plate **1214** is defined parallel to the vertical axis **736**. The gusset plate **1214** includes first sections, shown as interface sections **1242**, positioned between second sections, shown as midsections **1244**. The height of the gusset plate **1214** in the interface sections **1242** is greater than the height of the gusset plate **1214** in the midsections **1244**. This provides a greater surface area for the angled lacing members **1220** and the vertical lacing members **1222** to couple to, increasing the strength of the coupling between the gusset plate **1214**, the angled lacing members **1220**, and the vertical lacing members **1222**. A first end section, shown as proximal end section **1246**, and a second end section, shown as distal end section **1248**, of the gusset plate **1214** each have heights greater than that of the interface sections **1242** and the midsections **1244**. The proximal end section **1246** is positioned adjacent the end of the top plate **1212** opposite the distal end **704** of the aerial ladder assembly **700**. The distal end section **1248** is positioned adjacent the end of the top plate **1212** closest to the distal end **704** of the aerial ladder assembly **700**.

The distal end section **1248** defines an aperture **1250** that extends laterally therethrough. The aperture **1250** receives a bearing or bushing, shown as bushing **1252**. The bushing **1252** is coupled to the gusset plate **1214**. The bushing **1252** defines a laterally-extending aperture. The bushing **1252** is configured to receive a pin (e.g., a bolt, a rod, a dowel pin, etc.) therethrough. The fly section **1200** further includes an interface, shown as protrusion **1254**, extending longitudinally forward from each base rail **1202**. The protrusion **1254** is fixedly coupled to the corresponding base rail **1202**. The protrusions **1254** each define an aperture extending laterally therethrough that is configured to receive a pin.

Referring to FIGS. **1**, **2**, **30**, and **31**, the aerial assembly **500** includes a pair of linear actuators (e.g., hydraulic cylinders, pneumatic cylinders, electric linear actuators, etc.), shown as basket actuators **1340**, each having a first end portion, shown as distal end portion **1342**, and a second end portion, shown as proximal end portion **1344**. The distal end portion **1342** pivotably couples to the work basket **1300**. Specifically, a pair of protrusions, shown as brackets **1346**, extend from a rear side of the work basket **1300** on either side of the basket door **1330** near the top of the work basket **1300**. The brackets **1346** each define a set of laterally-extending apertures. A pin extends through the apertures of the brackets **1346** as well as an aperture defined by the distal end portion **1342** of the basket actuator **1340**. The proximal end portion **1344** of the basket actuator **1340** pivotably couples to the fly section **1200**. Specifically, a pin extends through the bushing **1252** as well as through an aperture defined by the proximal end portion **1344** of the basket actuator **1340**. The work basket **1300** is also pivotably

coupled to the fly section **1200**. Specifically, a pair of protrusions or brackets extend rearward from the work basket **1300**. These brackets each define laterally-extending apertures. A pair of pins extend through these laterally-extending apertures and the apertures of the protrusions **1254**.

The work basket **1300** pivots about an axis of rotation **1350** relative to the fly section **1200**. The basket actuators **1340** pivot about an axis of rotation **1352** relative to the work basket **1300** and about an axis of rotation **1354** relative to the fly section **1200**. The axis of rotation **1350**, the axis of rotation **1352**, and the axis of rotation **1354** all extend parallel to the lateral axis **734**. The basket actuators **1340** control the orientation of the work basket **1300** relative to the fly section **1200**. When the basket actuators **1340** extend, the work basket **1300** rotates forward (i.e., away from the fly section **1200**). When the basket actuators **1340** retract, the work basket **1300** rotates backward (i.e., toward the fly section **1200**). Accordingly, the basket actuators **1340** are in tension when the work basket **1300** is loaded.

In the embodiment shown in FIGS. **26-29**, the top plate **1212** has a rectangular cross section. The thickness of the top plate **1212**, which is defined between the top surface **1216** and the bottom surface **1218**, is uniform. The gusset plate **1214**, the angled lacing members **1220**, and the vertical lacing members **1222** are laterally centered on the top plate **1212**. The top plate **1212** extends both (a) laterally inward of the gusset plate **1214**, the angled lacing members **1220**, and the vertical lacing members **1222** and (b) laterally outward of the gusset plate **1214**, the angled lacing members **1220**, and the vertical lacing members **1222**. This provides an overhang for the operators to wrap their fingers around when traveling along the fly section **1200**. The top surfaces of the angled lacing members **1220** and the vertical lacing members **1222** each engage the bottom surface **1218** along their entire lengths.

Conventional ladder sections include a tubular hand rail that engages a series of lacing members. Such tubular hand rails often have a rectangular cross sectional shape. The tubular shape of the tubular hand rail is resistant to bending, even when separated from the rest of the ladder section. Accordingly, the tubular hand rail increases the resistance to bending of the ladder section. However, the tubular hand rails can be quite difficult to grip properly, as the height of the tubular hand rail is commonly sufficient to prevent an operator's fingers from wrapping around the tubular hand rail to contact a bottom surface of the tubular hand rail. Instead, the operator is forced to grip onto the laterally-facing sides of the tubular hand rail, which is less secure and can lead to slipping.

The hand rail **1210** improves the strength and ease of use of the fly section **1200** relative to a conventional tubular hand rail. Under normal loading, the fly section **1200** is bent about a lateral bending axis extending near the vertical center of the fly section **1200**. The moment of inertia of a structure, which defines its resistance to bending, is greater as the cross sectional area of the structure moves away from the axis about which the structure is bent. Accordingly, it is desirable to place as much material as possible near the top and bottom surfaces of the fly section **1200**. The top plate **1212** is solid and positioned at the very top of the fly section **1200**. In this arrangement, the contribution of the top plate **1212** to the moment of inertia of the fly section **1200** is maximized. Additionally, the gusset plate **1214** further increases the moment of inertia while strengthening the connections between the angled lacing members **1220**, the vertical lacing members **1222**, and the top plate **1212**. Comparatively, the conventional tubular hand rail provides a lesser strength to weight ratio than the hand rail **1210**. The bottom wall of the tubular hand rail is offset toward the bending axis, reducing its contribution to the moment of inertia of the corresponding ladder section. Additionally, the fly section **1200** can be shorter than a comparable ladder section incorporating a tubular hand rail, as the top plate **1212** does not need to be as far away from the bending axis to produce a similar moment of inertia.

Additionally, the hand rail **1210** is easier to grip than a conventional tubular hand rail. The width of the top plate **1212** of the hand rail **1210** is considerably less than its thickness. This facilitates an operator placing the palm of their hand on the top surface **1216** and wrapping their fingers along the lateral side surfaces of the top plate **1212** to engage the bottom surface **1218**. Accordingly, the operator can apply a force perpendicular to the bottom surface **1218** and solidly engage the top plate **1212** to support themselves. The conventional tubular hand rail that only provides engagement with the lateral side surfaces relies on frictional forces between the operator's fingers and the lateral side surfaces of the tubular hand rail. The frictional forces are dependent on the grip strength of the operator. Accordingly, to obtain sufficient support, the operator constantly has to impart a gripping force on the tubular hand rail, which can be tiring.

Referring to FIGS. **32-40**, in other alternative embodiments, the structure of the hand rail **1210** is modified. The shape, size, and position of the top plate **1212** and the gusset plate **1214** may be varied. Referring to FIG. **32**, the top plate **1212** is offset laterally inward relative to the embodiment shown in FIG. **29**. The side of the top plate **1212** that faces laterally outward is flush with the gusset plate **1214**. The angled lacing members **1220** and the vertical lacing members **1222** extend laterally outward of the top plate **1212** and above the gusset plate **1214** to engage a lateral side of the top plate **1212**. A portion of the top surfaces of the angled lacing members **1220** and the vertical lacing members **1222** is exposed such that it does not engage the top plate **1212**. The angled lacing members **1220** and the vertical lacing members **1222** are chamfered to smooth the transitions between the angled lacing members **1220**, the vertical lacing members **1222**, and the top plate **1212**.

Referring to FIG. **33**, the top plate **1212** is offset laterally outward relative to the embodiment shown in FIG. **29**. The side of the top plate **1212** that faces laterally inward is flush with the gusset plate **1214**. The angled lacing members **1220** and the vertical lacing members **1222** extend laterally inward of the top plate **1212**. The angled lacing members **1220** and the vertical lacing members **1222** do not extend above the gusset plate **1214** to engage a lateral side of the top plate **1212**.

Referring to FIG. **34**, the top plate **1212** is offset laterally outward relative to the embodiment shown in FIG. **29**. Additionally, the angled lacing members **1220** and the vertical lacing members **1222** are narrower than the angled lacing members **1220** and the vertical lacing members **1222** shown in FIG. **29**, and the gusset plate **1214** is shorter than the gusset plate **1214** shown in FIG. **29**. Although the gusset plate **1214**, angled lacing members **1220**, and the vertical lacing members **1222** are not laterally centered with the top plate **1212**, the top plate **1212** still extends both (a) laterally inward of the gusset plate **1214**, the angled lacing members **1220**, and the vertical lacing members **1222** and (b) laterally outward of the gusset plate **1214**, the angled lacing members **1220**, and the vertical lacing members **1222**.

Referring to FIG. **35**, the groove **1240** is omitted. Instead, the gusset plate **1214** engages and is coupled to a lateral side

surface of the angled lacing members **1220** and the vertical lacing members **1222**. The gusset plate **1214**, angled lacing members **1220**, and the vertical lacing members **1222** each engage the bottom surface **1218**.

Referring to FIG. **36**, the top plate **1212** is differently shaped than the top plate **1212** shown in FIG. **29**. Specifically, a groove or notch is defined extending upward from the bottom surface **1218**, removing a portion of the material of the top plate **1212**. Accordingly, in this embodiment, the top plate **1212** does not have a uniform thickness. Instead, the thickness is reduced throughout the portion of the top plate **1212** that defines the notch. Due to the notch, a greater portion of the cross sectional area is positioned near the top surface **1216** than near the bottom surface **1218**, increasing the moment of inertia to weight ratio of the hand rail **1210**.

Referring to FIG. **37**, the top surface **1216** and the bottom surface **1218** both extend horizontally near the lateral center of the hand rail **1210**. As the top plate **1212** extends laterally beyond the angled lacing members **1220** and the vertical lacing members **1222**, the bottom surface **1218** angles upwards such that the top plate **1212** tapers as it extends laterally outwards. This gradually reduces the thickness of the top plate **1212**. Due to the taper, a greater portion of the cross sectional area is positioned near the top surface **1216** than near the bottom surface **1218**, increasing the moment of inertia to weight ratio of the hand rail **1210**. In other embodiments, the top plate **1212** is otherwise tapered. By way of example, the top surface **1216** may extend downward. By way of another example, the taper may extend through the entirety of the top plate **1212** such that the top surface **1216** is horizontal, and the entirety of the bottom surface **1218** extends at an angle relative to the top surface **1216**.

Referring to FIG. **38**, the top plate **1212** is angled about a longitudinal axis relative to a horizontal plane. Accordingly, the top surface **1216** and the bottom surface **1218** extend upward as the top plate **1212** extends laterally outward. The top surfaces of the gusset plate **1214**, the angled lacing members **1220**, and the vertical lacing members **1222** are angled to match the angle of the bottom surface **1218**. In other embodiments, the top plate **1212** may be angled in the opposite direction (i.e., such that the top surface **1216** and the bottom surface **1218** extend downward as the top plate **1212** extends laterally outward).

In some embodiments one or more surfaces of the top plate **1212** are shaped, textured (e.g., knurled, slotted, etc.), or otherwise configured to facilitate a solid grip by the user on the hand rail **1210**. Referring to FIGS. **39** and **40**, the bottom surface **1218** of the top plate **1212** is scalloped. Portions of the top plate **1212** are cut away to form a series of rounded protrusions **1255**. In some embodiments, the rounded protrusions **1255** have a circular curvature. A portion of the bottom surface **1218** near the lateral center of the top plate **1212** is flat to facilitate engagement between the gusset plate **1214**, the angled lacing member **1220**, and the vertical lacing members **1222** and the bottom surface **1218**. The rounded protrusions **1255** are located both laterally inward and laterally outward from the angled lacing members **1220** and the vertical lacing members **1222**. The rounded protrusions **1255** facilitate a non-slipping engagement between an operator's fingers and the top plate **1212**.

In some embodiments, the top plate **1212** is tapered in the longitudinal direction. By way of example, the width and/or thickness of the top plate **1212** may gradually decrease from the end of the fly section **1200** opposite the distal end **704** to the end of the fly section **1200** closest to the distal end **704**. When a weight is placed at the distal end **704**, the stresses in the fly section **1200** gradually increase as the fly section **1200** extends away from the distal end **704**. Accordingly, the width and/or thickness of the top plate **1212** may be reduced gradually toward the distal end **704** without affecting the overall load capacity of the aerial ladder assembly **700**. Further, this reduction in width and/or thickness decreases the overall weight of the aerial ladder assembly **700**, increasing the load capacity of the aerial ladder assembly **700**.

The fly section **1200** may be assembled as a weldment. By way of example, two or more of the base rails **1202**, the ladder rungs **1206**, the ladder rung supports **1208**, the top plate **1212**, the gusset plate **1214**, the angled lacing members **1220**, the vertical lacing members **1222**, the gusset plates **1224**, the gusset plates **1226**, the vertical supports **1230**, the bosses **1232**, the bushings **1252**, and the protrusions **1254** may be provided as separate components. These separate components than may be fixedly coupled to one another as shown and described herein through welding. Alternatively one or more of the components may be fastened together. In some embodiments, the top plate **1212** and the gusset plate **1214** are provided as separate components. In other embodiments, the top plate **1212** and the gusset plate **1214** are integrally formed as a single component. The top plate **1212** and the gusset plate **1214** may be welded or fastened together. Alternatively, the hand rail **1210** may be extruded or forged and subsequently machined into its final shape.

Referring to FIGS. **24**, **25**, and **28**, the lower middle section **900**, the middle section **1000**, and the upper middle section **1100** have a construction that is substantially similar to that of the fly section **1200** except as otherwise stated herein. Components in these sections may be substantially similar to the parts in the fly section **1200** having similar names. The lower middle section **900** includes a pair of base rails **902** fixedly coupled to one another by a series of ladder rungs **906** and ladder rung supports **908**. The lower middle section **900** includes a hand rail **910** having a top plate **912** and a gusset plate **914**. The hand rails **910** are coupled to the corresponding base rails **902** by a series of angled lacing members **920**. The middle section **1000** includes a pair of base rails **1002** fixedly coupled to one another by a series of ladder rungs **1006** and ladder rung supports **1008**. The middle section **1000** includes a hand rail **1010** having a top plate **1012** and a gusset plate **1014**. The hand rails **1010** are coupled to the corresponding base rails **1002** by a series of angled lacing members **1020**. The upper middle section **1100** includes a pair of base rails **1102** fixedly coupled to one another by a series of ladder rungs **1106** and ladder rung supports **1108**. The upper middle section **1100** includes a hand rail **1110** having a top plate **1112** and a gusset plate **1114**. The hand rails **1110** are coupled to the corresponding base rails **1102** by a series of angled lacing members **1120**.

As shown in FIG. **25**, the lower middle section **900** receives the middle section **1000**, the middle section **1000** receives the upper middle section **1100**, and the upper middle section **1100** receives the fly section **1200**. The top surfaces of the top plate **912**, the top plate **1012**, the top plate **1112**, and the top plate **1212** are all level with one another (e.g., arranged in the same horizontal plane). To facilitate this arrangement, each ladder section is taller and wider than the ladder section that it directly supports. As such, the upper middle section **1100** is taller and wider than the fly section **1200**, the middle section **1000** is taller and wider than the upper middle section **1100**, and the lower middle section **900** is taller and wider than the middle section **1000**.

Referring to FIGS. **24**, **25**, and **28**, each ladder section directly supports or indirectly supports all of the ladder sections above it. By way of example, the lower middle

section **900** supports the middle section **1000** directly as well as the upper middle section **1100** and the fly section **1200** indirectly. Accordingly, each sequential ladder section is configured to support a greater load. This is accomplished using structural members of greater size and thickness. An overall thickness of each top plate may be defined as the greatest distance between the top surface of the top plate and the bottom surface of the top plate as measured parallel to the vertical axis **736**. As shown in FIG. **28**, the overall thickness of the top plate **1112** is greater than that of the top plate **1212**, the overall thickness of the top plate **1012** is greater than that of the top plate **1112**, and the overall thickness of the top plate **912** is greater than that of the top plate **1012**. The width (e.g., measured in a lateral direction) of each of the top plates may be the same. As shown in FIG. **28**, the gusset plate **1114** is wider (e.g., measured in a lateral direction) than the gusset plate **1214**, the gusset plate **1014** is wider than the gusset plate **1114**, and the gusset plate **914** is wider than the gusset plate **1014**. The height of each of the gusset plates (e.g., measured in a vertical direction) between the angled lacing members (e.g., at the midsections **1244**) may be the same. The height of each of the gusset plates near the angled lacing members (e.g., at the interface sections **1242**) may increase in each of the lower ladder sections.

The arrangement of the lacing members in the lower middle section **900**, the middle section **1000**, and the upper middle section **1100** may vary from that of the fly section **1200**. By way of example, the lower middle section **900**, the middle section **1000**, and the upper middle section **1100** may include only angled lacing members and no vertical lacing members. By way of another example, the angled lacing members **1120**, the angled lacing members **1020**, and the angled lacing members **920** may have a rectangular cross section instead of a circular cross section. Additionally, the lower middle section **900**, the middle section **1000**, and the upper middle section **1100** may each include pulley support assemblies similar to the pulley support assemblies **1228**. The fly section **1200** includes a pair of pulley support assemblies **1228** positioned near a lower end (e.g., an end opposite the distal end **704**) of the fly section **1200**. The lower middle section **900**, the middle section **1000**, and the upper middle section **1100** may each include two pairs of pulley support assemblies: one pair located at each end of the ladder section. The additional pulley support assemblies may support the cables **724** as they extend to the next ladder section.

Referring to FIGS. **22-25**, **28**, and **41**, the base section **800** is shown according to an exemplary embodiment. The base section **800** may have a construction that is similar to that of the fly section **1200** except as otherwise stated herein. Accordingly, components in the base section **800** may be substantially similar to the components in the fly section **1200** having similar names. The base section **800** includes a pair of base rails **812** extending longitudinally. The base rails **812** may define apertures **814**, through which cables, wires, or hoses may enter the base rails **812**. The base rails **812** are fixedly coupled to one another by a series of ladder rungs **816** and ladder rung supports **818** extending between the base rails **812**. A series of angled lacing members **830** and vertical lacing members **832** are coupled to and extend upward from the base rails **812**.

The base section **800** includes a pair of hand rails **840** positioned above the base rails **812**. The hand rails **840** each include a top plate **842**, a top plate **844**, and a top plate **846**, each having a solid cross section. A first section **848** of the top plate **842** extends horizontally, and a second section **850** of the top plate **842** is bent downward and extends toward the distal end **704**, engaging the top surface of the top plate **846**. The top plate **844** engages the bottom surface of the first section **848** of the top plate **842** and extends downward toward the distal end **704**. The top plate **846** engages the bottom surface of the top plate **842** and extends downward away from the distal end **704**. The angled lacing members **830** and the vertical lacing members **832** engage and fixedly couple to bottom surfaces of the top plate **842**, the top plate **844**, and/or the top plate **846**.

The hand rails **840** each further include a gusset plate **854** extending vertically between and fixedly coupled to the bottom surface of the top plate **842** and a top surface of the top plate **844**. A gusset plate **856** extends along and fixedly couples to a bottom surface of the top plate **844**, a bottom surface of the top plate **842**, and a bottom surface of the top plate **846**. A gusset plate **858** extends between and fixedly couples to a bottom surface of the top plate **842** and a top surface of the top plate **846**. The gusset plate **858** defines an aperture extending laterally therethrough that acts as the actuator interface **804** (e.g., that is configured to receive a pin that engages the end **714** of a pivot actuator **710**). The angled lacing members **830** and the vertical lacing members **832** define slots, notches, or grooves that receive the gusset plate **856**. Accordingly, the angled lacing members **830** and the vertical lacing members **832** extend along each lateral side of the gusset plate **856** to engage the bottom surfaces of the of the top plate **842**, the top plate **844**, and/or the top plate **846**. The angled lacing members **830** and the vertical lacing members **832** are fixedly coupled to the gusset plate **856**.

As utilized herein, the terms "approximately," "about," "substantially", and similar terms are intended to have a broad meaning in harmony with the common and accepted usage by those of ordinary skill in the art to which the subject matter of this disclosure pertains. It should be understood by those of skill in the art who review this disclosure that these terms are intended to allow a description of certain features described and claimed without restricting the scope of these features to the precise numerical ranges provided. Accordingly, these terms should be interpreted as indicating that insubstantial or inconsequential modifications or alterations of the subject matter described and claimed are considered to be within the scope of the disclosure as recited in the appended claims.

It should be noted that the term "exemplary" and variations thereof, as used herein to describe various embodiments, are intended to indicate that such embodiments are possible examples, representations, or illustrations of possible embodiments (and such terms are not intended to connote that such embodiments are necessarily extraordinary or superlative examples).

The term "coupled" and variations thereof, as used herein, means the joining of two members directly or indirectly to one another. Such joining may be stationary (e.g., permanent or fixed) or moveable (e.g., removable or releasable). Such joining may be achieved with the two members coupled directly to each other, with the two members coupled to each other using a separate intervening member and any additional intermediate members coupled with one another, or with the two members coupled to each other using an intervening member that is integrally formed as a single unitary body with one of the two members. If "coupled" or variations thereof are modified by an additional term (e.g., directly coupled), the generic definition of "coupled" provided above is modified by the plain language meaning of the additional term (e.g., "directly coupled" means the joining of two members without any separate intervening

member), resulting in a narrower definition than the generic definition of "coupled" provided above. Such coupling may be mechanical, electrical, or fluidic.

The term "or," as used herein, is used in its inclusive sense (and not in its exclusive sense) so that when used to connect a list of elements, the term "or" means one, some, or all of the elements in the list. Conjunctive language such as the phrase "at least one of X, Y, and Z," unless specifically stated otherwise, is understood to convey that an element may be either X; Y; Z; X and Y; X and Z; Y and Z; or X, Y, and Z (i.e., any combination of X, Y, and Z). Thus, such conjunctive language is not generally intended to imply that certain embodiments require at least one of X, at least one of Y, and at least one of Z to each be present, unless otherwise indicated.

References herein to the positions of elements (e.g., "top," "bottom," "above," "below") are merely used to describe the orientation of various elements in the FIGURES. It should be noted that the orientation of various elements may differ according to other exemplary embodiments, and that such variations are intended to be encompassed by the present disclosure.

The hardware and data processing components used to implement the various processes, operations, illustrative logics, logical blocks, modules and circuits described in connection with the embodiments disclosed herein may be implemented or performed with a general purpose single- or multi-chip processor, a digital signal processor (DSP), an application specific integrated circuit (ASIC), a field programmable gate array (FPGA), or other programmable logic device, discrete gate or transistor logic, discrete hardware components, or any combination thereof designed to perform the functions described herein. A general purpose processor may be a microprocessor, or, any conventional processor, controller, microcontroller, or state machine. A processor also may be implemented as a combination of computing devices, such as a combination of a DSP and a microprocessor, a plurality of microprocessors, one or more microprocessors in conjunction with a DSP core, or any other such configuration. In some embodiments, particular processes and methods may be performed by circuitry that is specific to a given function. The memory (e.g., memory, memory unit, storage device) may include one or more devices (e.g., RAM, ROM, Flash memory, hard disk storage) for storing data and/or computer code for completing or facilitating the various processes, layers and modules described in the present disclosure. The memory may be or include volatile memory or non-volatile memory, and may include database components, object code components, script components, or any other type of information structure for supporting the various activities and information structures described in the present disclosure. According to an exemplary embodiment, the memory is communicably connected to the processor via a processing circuit and includes computer code for executing (e.g., by the processing circuit or the processor) the one or more processes described herein.

The present disclosure contemplates methods, systems and program products on any machine-readable media for accomplishing various operations. The embodiments of the present disclosure may be implemented using existing computer processors, or by a special purpose computer processor for an appropriate system, incorporated for this or another purpose, or by a hardwired system. Embodiments within the scope of the present disclosure include program products comprising machine-readable media for carrying or having machine-executable instructions or data structures stored thereon. Such machine-readable media can be any available media that can be accessed by a general purpose or special purpose computer or other machine with a processor. By way of example, such machine-readable media can comprise RAM, ROM, EPROM, EEPROM, or other optical disk storage, magnetic disk storage or other magnetic storage devices, or any other medium which can be used to carry or store desired program code in the form of machine-executable instructions or data structures and which can be accessed by a general purpose or special purpose computer or other machine with a processor. Combinations of the above are also included within the scope of machine-readable media. Machine-executable instructions include, for example, instructions and data which cause a general purpose computer, special purpose computer, or special purpose processing machines to perform a certain function or group of functions.

Although the figures and description may illustrate a specific order of method steps, the order of such steps may differ from what is depicted and described, unless specified differently above. Also, two or more steps may be performed concurrently or with partial concurrence, unless specified differently above. Such variation may depend, for example, on the software and hardware systems chosen and on designer choice. All such variations are within the scope of the disclosure. Likewise, software implementations of the described methods could be accomplished with standard programming techniques with rule-based logic and other logic to accomplish the various connection steps, processing steps, comparison steps, and decision steps.

It is important to note that the construction and arrangement of the fire apparatus **10** and the systems and components thereof as shown in the various exemplary embodiments is illustrative only. Additionally, any element disclosed in one embodiment may be incorporated or utilized with any other embodiment disclosed herein. Although only one example of an element from one embodiment that can be incorporated or utilized in another embodiment has been described above, it should be appreciated that other elements of the various embodiments may be incorporated or utilized with any of the other embodiments disclosed herein.

The invention claimed is:

1. A fire apparatus comprising:

a chassis;

a plurality of axles coupled to the chassis;

a turntable rotatably coupled to the chassis; and

an aerial ladder assembly pivotably coupled the turntable and including a ladder section, the ladder section comprising:

a first base rail and a second base rail extending longitudinally;

a plurality of ladder rungs extending between the first base rail and the second base rail;

a top plate positioned above the first base rail;

a plurality of lacing members coupled to the top plate and the first base rail; and

a gusset plate coupled to the top plate and at least one of the lacing members;

wherein the top plate extends at least one of (a) laterally inward of the gusset plate and (b) laterally outward of the gusset plate, and wherein the top plate has a solid cross section, wherein the top plate extends a first length longitudinally, wherein the gusset plate extends a second length longitudinally, and wherein the second length is at least half of the first length, wherein a height of the gusset plate varies along the second length such

that a first portion of the gusset plate has a first height and a second portion of the gusset plate has a second height, wherein the first height is greater than the second height, wherein the first portion of the gusset plate extends adjacent a first one of the lacing members, and wherein the second portion of the gusset plate is positioned between the first one of the lacing members and a second one of the lacing members, wherein the top plate defines a bottom surface, wherein each of the lacing members defines a groove that receives the gusset plate and engages the bottom surface of the top plate.

2. The fire apparatus of claim **1**, wherein the top plate further defines a top surface positioned opposite the bottom surface, and wherein at least one of the top surface and the bottom surface extend parallel to a lateral axis.

3. The fire apparatus of claim **2**, wherein the top plate extends both (a) laterally inward of the gusset plate and (b) laterally outward of the gusset plate.

4. The fire apparatus of claim **1**, wherein the ladder rungs are first ladder rungs, the top plate is a first top plate, the lacing members are first lacing members, and the gusset plate is a first gusset plate;

wherein the aerial ladder assembly further comprises a second ladder section, comprising:

a third base rail and a fourth base rail extending longitudinally;

a plurality of second ladder rungs extending between the third base rail and the fourth base rail;

a second top plate positioned above the third base rail;

a plurality of second lacing members coupled to the second top plate and the third base rail; and

a second gusset plate coupled to the second top plate and at least one of the second lacing members;

wherein the second top plate extends at least one of (a) laterally inward of the second gusset plate and (b) laterally outward of the second gusset plate, wherein the second top plate has a solid cross section, wherein the first top plate has a first overall thickness, wherein the second top plate has a second overall thickness, and wherein the second overall thickness is greater than the first overall thickness.

5. The fire apparatus of claim **1**, further comprising:

a linear actuator having a first end portion and a second end portion positioned opposite the first end portion; and

a work basket configured to support at least one operator;

wherein the work basket is pivotably coupled to at least one of the first base rail and the second base rail, wherein the first end portion of the linear actuator is coupled to the work basket, and wherein the gusset plate defines an aperture configured to receive a pin to couple the second end portion of the linear actuator to the work basket.

6. The fire apparatus of claim **1**, further comprising a linear actuator having a first end portion and a second end portion, wherein the ladder section is first ladder section, wherein the aerial ladder assembly further includes a second ladder section pivotably coupled to the turntable, wherein the first ladder section is one of (a) directly slidably coupled to the second ladder section and (b) indirectly slidably coupled to the second ladder section by at least one third ladder section, and wherein the first end portion of the linear actuator is coupled to the turntable and the second end portion of the linear actuator is coupled to the second ladder section such a retraction of the linear actuator causes a corresponding raising of the aerial ladder assembly.

7. A ladder for an aerial assembly of a fire apparatus, the ladder comprising:

a first base rail and a second base rail extending longitudinally;

a plurality of ladder rungs extending between the first base rail and the second base rail;

a top plate positioned above the first base rail;

a plurality of lacing members coupled to the top plate and the first base rail; and

a gusset plate coupled to the top plate and at least one of the lacing members;

wherein the top plate extends at least one of (a) laterally inward of the gusset plate and (b) laterally outward of the gusset plate, and wherein the top plate has a solid cross section wherein the top plate extends a first length longitudinally, wherein the gusset plate extends a second length longitudinally, and wherein the second length is at least half of the first length, wherein a height of the gusset plate varies along the second length such that a first portion of the gusset plate has a first height and a second portion of the gusset plate has a second height, wherein the first height is greater than the second height, wherein the first portion of the gusset plate extends adjacent a first one of the lacing members, and wherein the second portion of the gusset plate is positioned between the first one of the lacing members and a second one of the lacing members, wherein the top plate defines a bottom surface, wherein each of the lacing members defines a groove that receives the gusset plate and engages the bottom surface of the top plate.

8. The ladder of claim **7**, wherein the top plate further defines a top surface positioned opposite the bottom surface, and wherein at least one of the top surface and the bottom surface extend parallel to a lateral axis.

9. The ladder of claim **7**, further comprising an interface coupled to at least one of the first base rail and the second base rail, wherein the interface is configured to pivotably couple a work basket of the aerial assembly to the ladder, wherein the gusset plate defines an aperture configured to couple to an actuator that controls movement of the work basket relative to the ladder.

10. A method of manufacturing an aerial ladder assembly for a fire apparatus, the method comprising:

providing a first base rail and a second base rail laterally offset from one another;

coupling a plurality of ladder rungs to both the first base rail and the second base rail;

providing a hand rail above the first base rail, the hand rail comprising:

a top plate having a top surface and a bottom surface; and

a gusset plate coupled to the bottom surface of the top plate; and

coupling a plurality of lacing members to the first base rail and the hand rail such that at least one of the lacing members engages the gusset plate;

wherein the top plate extends at least one of (a) laterally inward of the gusset plate and (b) laterally outward of the gusset plate, and wherein the top plate has a solid cross section wherein the top plate extends a first length longitudinally, wherein the gusset plate extends a second length longitudinally, and wherein the second length is at least half of the first length, wherein a height of the gusset plate varies along the second length such that a first portion of the gusset plate has a first height and a second portion of the gusset plate has a second

height, wherein the first height is greater than the second height, wherein the first portion of the gusset plate extends adjacent a first one of the lacing members, and wherein the second portion of the gusset plate is positioned between the first one of the lacing members and a second one of the lacing members, wherein the top plate defines a bottom surface, wherein each of the lacing members defines a groove that receives the gusset plate and engages the bottom surface of the top plate.

11. The method of claim **10**, wherein the gusset plate defines an aperture extending laterally therethrough, the method further comprising:

pivotably coupling a work basket to at least one of the first base rail and the second base rail;

coupling a linear actuator to the work basket; and

inserting a pin through the aperture defined by the gusset plate such that the pin engages the linear actuator;

wherein the linear actuator is configured to selectively adjust an orientation of the work basket relative to the first base rail.

* * * * *