Feb. 12, 1963 S. B. ST. JOHN 3,077,061

GRINDING MACHINE

Filed Feb. 29, 1960 4 Sheets-Sheet 1

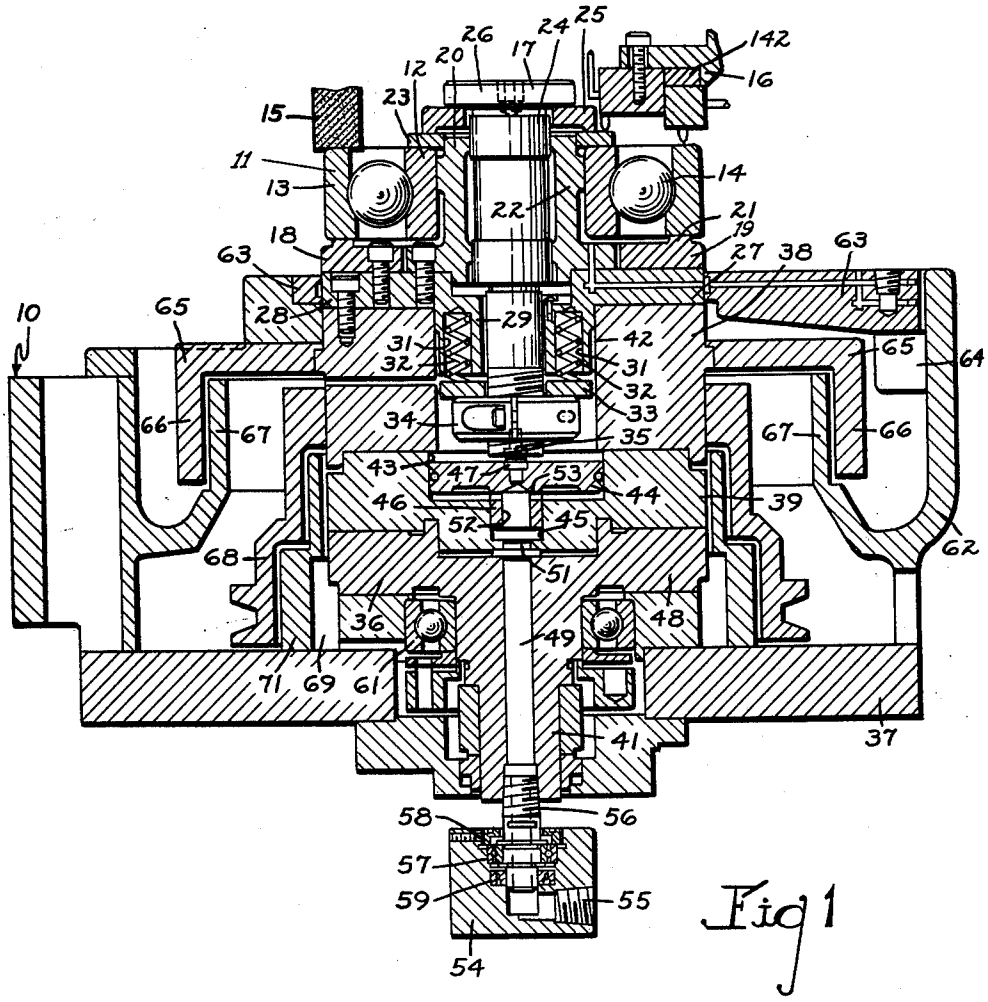

Fig 1

INVENTOR.
Stuart B. St. John
BY Norman S. Blodgett
Attorney

GRINDING MACHINE

Filed Feb. 29, 1960 4 Sheets-Sheet 2

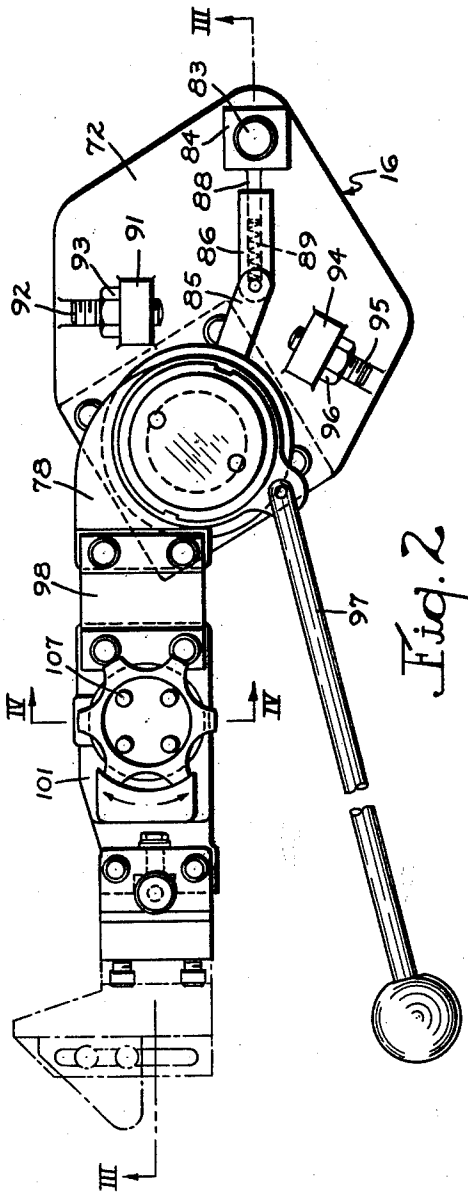

Fig. 2

INVENTOR.
Stuart B. St. John
BY Norman S. Blodgett
Attorney

Feb. 12, 1963 S. B. ST. JOHN 3,077,061

GRINDING MACHINE

Filed Feb. 29, 1960 4 Sheets-Sheet 3

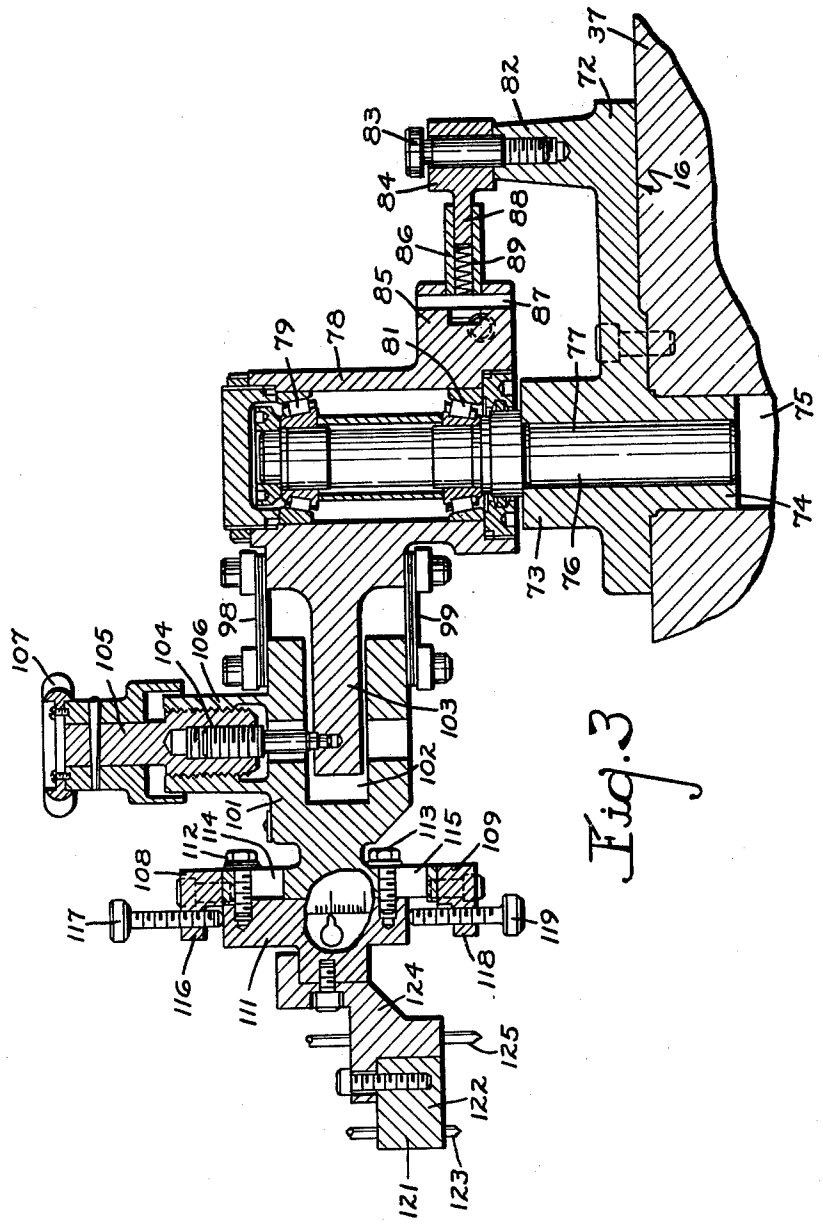

Fig. 3

INVENTOR.
Stuart B. St. John
BY Norman S. Blodgett
Attorney

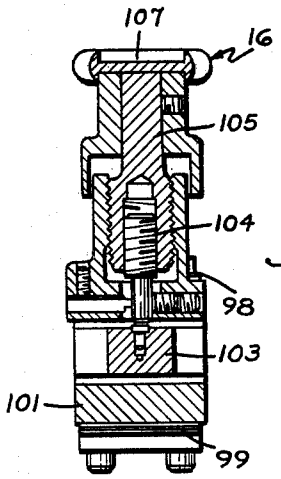

Fig. 4

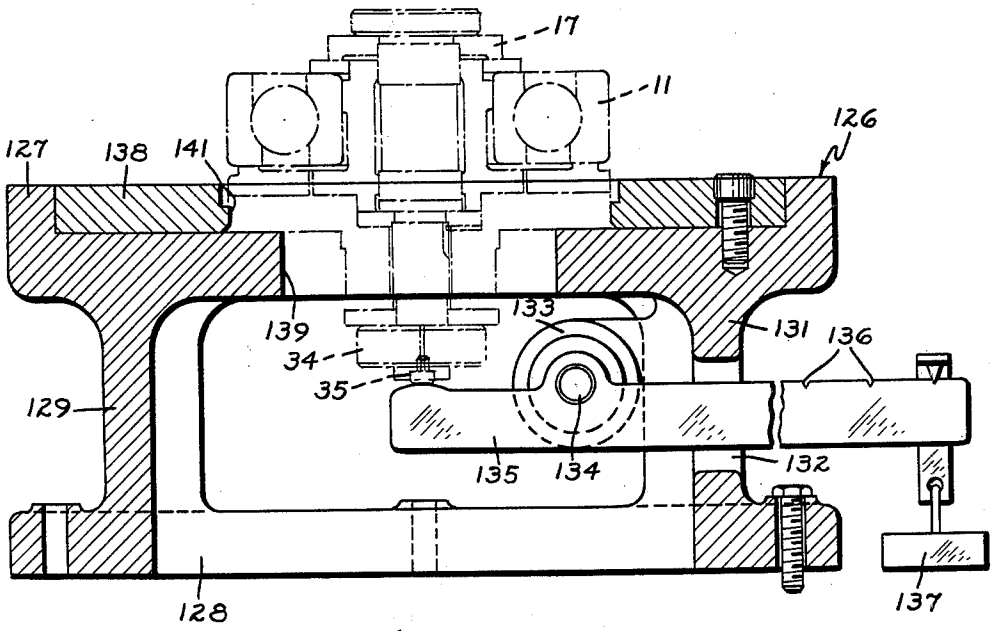

Fig. 5

INVENTOR.
Stuart B. St. John
BY Norman S. Blodgett
Attorney

United States Patent Office

3,077,061

Patented Feb. 12, 1963

1

3,077,061

GRINDING MACHINE

Stuart B. St. John, Worcester, Mass., assignor to The Heald Machine Company, Worcester, Mass., a corporation of Delaware

Filed Feb. 29, 1960, Ser. No. 11,677
4 Claims. (Cl. 51—237)

This invention relates to a grinding machine, and more particularly to apparatus for finishing the end surfaces of ball bearing races by abrasion.

In using anti-friction bearings it is common practice to mount the bearings in their housings in such a manner that the inner and outer races are displaced axially so that the roller balls are jammed between the curved surfaces of their respective race grooves and the balls are subjected to an initial stress. This is called "pre-loading." The effect of pre-loading is to remove any play between the elements of the bearing so that a shaft is accurately held in position for rotation without lateral motion. This has been accomplished in the past by locking the inner race against a shoulder on the shaft and providing a movable sleeve which contacts the other end of the outer race and subjects it to pressure to displace it axially relative to the inner race. It has been suggested that the design of machinery would be greatly simplified if the roller bearings were ground in such a manner that, when the bearing is initially assembled, corresponding end surfaces are slightly displaced from one another and a common shoulder is provided in the housing against which both of these end surfaces are pressed, thus resulting in an accurately predetermined preloading. However, this is a difficult thing to accomplish, since, when these surfaces have been predetermined in this manner and are drawn up so that they lie in a common plane, the preload should be a value which can be predetermined by the designer. In other words, the question is, how is one to finish the end surfaces in such a manner that when they are drawn up in the mechanism, the preselected preload appears in the bearings. These and other problems presented by the prior art have been obviated in a novel manner by the present invention.

It is, therefore, an outstanding object of the invention to provide a grinding machine for grinding the end surfaces of the races of a roller bearing in such a manner that, when the bearing is assembled and placed in the mechanism with the said end surfaces in a common plane, the balls will be subjected to a predetermined preloading stress.

Another object of this invention is the provision of a grinding machine for pre-loading and grinding ball bearings which engage the end surfaces of the races during the grinding operation to bring them to a predetermined dimension.

A further object of the present invention is the provision of a grinding machine, including a bearing preloading cartridge which may be adjusted to provide the bearing with an initial pre-loading during the grinding operation.

It is another object of the instant invention to provide a gauging mechanism for use with a pre-loading grinding machine for anti-friction bearings.

It is a further object of the invention to provide a measuring device for setting a pre-loading cartridge of a grinding machine for antifriction bearings.

A still further object of this invention is the provision of a grinding machine for pre-loading an anti-friction bearing during the grinding of the end surfaces of the races, which machine is provided with an air gauging mechanism for gauging the surfaces during the grinding operation.

With these and other objects in view, as will be apparent to those skilled in the art, the invention resides in the combination of parts set forth in the specification and covered by the claims appended hereto.

2

The character of the invention, however, may be best understood by reference to one of its structural forms, as illustrated by the accompanying drawings, in which:

FIG. 1 is a vertical sectional view of a portion of a grinding machine incorporating the principles of the present invention;

FIG. 2 is a plan view of a gauging apparatus associated with the invention;

FIG. 3 is a sectional view of the gauging apparatus taken on the line III—III of FIG. 2;

FIG. 4 is a sectional view of the gauging apparatus taken on the line IV—IV of FIG. 2; and

FIG. 5 is a vertical sectional view of an accessory apparatus associated with the invention.

Referring first to FIG. 1, wherein are best shown the general features of the invention, the grinding machine, indicated generally by the reference numeral 10, is shown in use with a ball bearing 11 having an inner race 12, an outer race 13, and balls 14. A grinding wheel 15 forming part of the machine is shown operating on an end surface of the outer race 13 and a gauge 16 is shown operating on the bearing 11 at the opposite side thereof from the wheel 15. The ball bearing 11 is mounted on a cartridge 17 which is removable from the rest of the machine. The cartridge has a main body 18 having a lower circular plate 19 and a tubular upper portion 20. The circular plate 19 has close to its outer periphery a raised ridge 21 having a circular horizontal upper surface, and the tubular upper portion 20 is provided with a ridge 22 adjacent its upper end and having a cylindrical outer surface. The surface of the inner bore of the inner race 12 slides on the surface of the ridge 22, while the lower end of the outer race 13 rests on the flat surface of the ridge 21. A washer 23 is slidable along the tubular upper portion 20 and rests on the upper end of the inner race 12; the thickness of this washer is quite accurately determined. Extending through the bore of the tubular upper portion 20 is a vertical shaft 24, this shaft being fully slidable within the main body 18 of the cartridge 17. The shaft 24 extends well above the upper portion 20 and carries a quick-acting clamping disk 25 in the form of an open C. A large headed cap screw 26 is threadedly attached to the shaft 24 and is attached thereto so that its lower surface presses against the upper surface of the clamping disk 25. Underneath the main body 18 is a lower body 27 having an upper disk portion 28 and a downwardly depending tubular portion 29 through which extends the lower end of the vertical shaft 24. The main body 18 and the lower body 27 are suitably bolted together. Extending axially from the lower end of the tubular portion 29 and surrounding the bore in which resides the vertical shaft 24 is a series of bores 31, each of which contains a coil spring 32. Underlying these springs 32 and surrounding the shaft 24 is a washer 33 below which is located an adjusting collar 34 which is of the split type and which is provided with a screw for loosening and tightening of the collar on the shaft. The lower end of the shaft 24 is provided with a hardened metal button 35. The cartridge 17, therefore, consists in a general way of the vertical shaft 24 on which are mounted the main body 18, the lower body 27, the washers 23 and 33, the adjusting collar 34, and the cap screw 26, as well as the springs 32. This cartridge is thought of as being in the nature of a jig which may be removed from the grinding machine and which would be intended for use in finishing a particular size of bearing.

Carrying the cartridge 17 and also mounted in the grinding machine 10 is a workhead 36. This workhead is mounted in a base 37 of the machine and is rotatable

therein. The workhead consists generally of a chuck 38, a cylinder 39, and a shaft 41. The chuck 38 is provided with a central bore 42 in which fits the tubular portion 29 of the lower body 27, the under surface of the disk portion 28 of the lower body resting on the upper surface of the chuck and being suitably bolted thereto. The cylinder 39 is relatively flat and disk-like and is provided with a bore 43 in which is slidably carried a piston 44. The bore 43 is provided with an extension 45 at its lower portion of considerably smaller diameter and in this extension is slidably carried a tubular, downwardly-extending piston rod 46. The upper surface of the piston 44 is suitably provided with a hardened metal button 47 adapted to contact the button 35 on the lower end of the vertical shaft 24. The shaft 41 is provided with an outwardly-extending disk-like flange 48 at its upper end and on this flange rests the cylinder 39 and the chuck 38, all three portions of the workhead being suitably fastened together in driving engagement. Extending axially through the shaft 41 is an air passage 49 which connects with a similar passage 51 extending through the cylinder 39 where it emerges opposite a similar passage 52 in the piston 44. The passage extends upwardly into the rod 46 of the piston and is provided with laterally-extending branches 53 extending to the outer surface of the rod into the space between the cylinder and the piston. Suitably fastened to the lower end of the shaft 41 is a rotating pressure joint 54 which consists of a block having an entrance port 55 adapted to be threadedly engaged with a pneumatic pressure fitting. Rotatably carried within the joint 54 is a threaded fitting 56 adapted to be threadedly engaged with the lower end of the passage 49 of the shaft 41. The fitting 56 is carried within the joint 54 for rotation in a small ball bearing 57 and suitable seals 58 and 59 are provided to permit this rotation without leakage of air. The shaft 41 of the workhead is mounted in a ball bearing 61 whose outer race is fastened in the base 37. The base 37 is provided with a tubular flange 62 which extends upwardly of the workhead and the cylinder and fastened inside its upper edge is a coolant ring 63 having an inner cylindrical surface which closely embraces the circular outer edge of the disk portion 28 of the lower body 27; suitable support segments 64 extend inwardly of the inner surface of the flange 62. A guard 65 surrounds the chuck 38 and is provided with a downwardly depending tubular flange 66 which extends generally parallel to and slightly spaced from a similar cylindrical tubular flange 67 extending upwardly from the base 37. Fastened to the outer surface of the chuck 38 is a pulley 68 adapted to be driven by a V-belt from a motor (not shown) and to thereby drive the workhead 36 and the cartridge 17. The pulley is separated from the rest of the workhead by an annular recess 69 and upwardly into this recess extends a generally tubular flange 71 forming part of the base 37.

FIGS. 2, 3, and 4 show the details of the gauge 16, which is provided with a base member 72 arranged to be bolted to the upper surface of the base 37 of the grinding machine 10. This base is provided with an upwardly-extending boss 73 and a downwardly-extending boss 74 which is adaped to fit into a suitable bore 75 provided therefor in the base 37. The boss 73 and the boss 74 extend from opposite sides of the base member 72 and a bore 76 extends entirely through them. In this bore is rotatably mounted a vertical shaft 77, on the upper end of which is rotatably mounted an arm 78. Suitable roller bearings 79 and 81 provide for smooth rotation between the shaft 77 and arm 78. A boss 82 extends upwardly from the base member 72 at a part thereof spaced a substantial distance from the boss 73 and a small arm 84 is fastened to the upper end of this boss by means of a sleeve bolt 83. A similar arm 85 extends laterally from the arm 78 and has a tubular member 86 hingedly connected thereto by means of a single pin 87. The arm 84 has a reduced portion 88 which slides within the bore of the tubular member 86; a coil spring 89 is compressed between the free end of the reduced portion 88 and the hinge pin 87. On one side of the base 72 is an upwardly-extending abutment 91 having threaded therethrough a horizontal stop screw 92 which may be locked in place by a lock nut 93. At the opposite side of the base member 72 is a similar abutment 94 having a stop screw 95 and a lock nut 96. The assembly of the arm 85 and the arm 84 with the coil spring 89 compressed between them acts as an over-center toggle which tends to throw the arm 85 into contact with either the stop screw 92 or the stop screw 95.

An actuating handle 97 is fastened to the arm 78 to bring about rotation thereof about the shaft 76. Extending outwardly from the arm 78 on the side thereof opposite the arm 85 is a pair of reed supports 98 and 99, one located above the other. Fastened to the outer ends of the reed supports is an extension 101 having a socket 102 facing toward the arm 78 and located between the reed supports 98 and 99. Into this socket 102 extends an abutment 103 protruding from the arm 78 and having a threaded stud 104 extending upwardly therefrom on which stud is threaded a nut 105. This nut is also provided externally with threads by which it engages a tubular internally-threaded boss 106 which extends upwardly from the extension 101. Mounted at the top of the nut 105 is an actuating handle 107. The outer end of the extension 101 is provided with an upwardly-extending flange 108 and a downwardly extending flange 109, the flanges having aligned vertical slots. These flanges are located at the extreme outer end of the extension 101 and to them is fastened a gauge supporting member 111 threadedly engaged by bolts 112 and 113 extending through slots 114, 115 in the flanges 108 and 109, respectively. Extending laterally from the upper end of the flange 108 is a flange 116 through which threadedly passes a vertical adjusting screw 117; in a similar manner a flange 118 extends laterally from the lower end of the flange 109 and is provided with a vertical adjusting screw 119. Bolted to the outer end of the gauge supporting member 111 is the gauge 121 consisting of an inner race portion 122 having an air nozzle 123 and an outer race portion 124 having an air nozzle 125.

FIG. 5 shows an accessory for setting the cartridge 17 in such a manner that the required amount of pre-loading will be introduced into the bearing during the grinding operation. The accessory 126 is provided with an upper plate 127 and a lower plate 128 joined by two legs 129 and 131. The leg 131 is provided with an aperture 132 extending laterally therethrough. The upper and lower plates 127 and 128 are circular in form and the legs 129 and 131 are arranged close to the outer peripheries. The aperture 132 extends radially through the leg 131 and extending from the leg on each side of the aperture 132 is an abutment 133 which extends generally radially inwardly of the leg 131. The abutments 133 are provided with a horizontal hinge pin 134. Pivoted on this hinge pin is a balance arm 135 adapted at its inner end to engage the button 35 of the cartridge 17 and at the other end is furnished with notches 136 adapted to receive a weight 137. The upper plate 127 is recessed and provided with a hardened metal insert 138; through the plate 127 and insert 138 extends an aperture 139 provided with a counterbore 141. The cartridge 17 is adapted to extend through the aperture 139 with the counterbore 141 fitting closely against the outer periphery of the disk portion 28 of the lower body 27 of the cartridge and with the under surface of the disk portion 28 lying against the shoulder between the bore 139 and the counterbore 141.

The operation of the invention will now be readily understood in view of the above description. The cartridge 17 without the ball bearing workpiece is dropped into the bore 42 in the chuck 38 of the workhead 36. The cartridge 17 is then bolted in place. The quickly-removable clamping disk 25, and the washer 23 are re-

moved from the cartridge 17 and the workpiece is slid into place on the main body 18. One end of the outer race 13 of the ball bearing is to be ground to produce the desired pre-loading dimension and for that purpose a standard inner race 12 and balls 14 are used. The washer 23 and C-form clamping disk 25 are replaced, the lower surface of the head of the cap screw 26 contacting the upper end of the vertical shaft 24. The lower surface of the cap screw 26 also contacts the upper surface of the clamping disk 25 and transmits a force downwardly into the top end of the inner race 12. In order to do this it is necessary that pressure air be admitted beneath the piston 44. The air enters through the entrance port 55 of the pressure joint 54 and passes upwardly through the passage 49, the passage 52, and the passage 53 into the space under the piston 44. This air pressure causes the piston to move upwardly in the bore 43 until the button 47 presses against the button 35 in the lower end of the vertical shaft 24. This upward pressure on the shaft passes through the collar 34 and the washer 33 against the lower ends of the springs 32, thus compressing them and relieving the normal downward pressure which they exert through the vertical shaft 24 on the washer 23 and therefore on the ball bearing 11. Then, after bearing 11, washer 23 and the C-form clamping disk 25 are in position, the air is released, thus permitting the springs 32 to expand and act through the shaft 24 to exert force on the bearing 11. The apparatus is then in the condition shown in FIG. 1. The grinding wheel 15 is brought into play and grinds the upper end surface of the outer race 13. At the opposite side of the workpiece from the grinding wheel 15 is located the gauge 16 which observes the grinding operation and determines when the level of the upper end of the outer race 13 has reached the level of the upper end of the inner race 12. At all times the bearing is, of course, under an initial pre-load determined by the springs 32 and the position of the adjustable collar 34, so that, when the bearing is removed from the machine, if these two surfaces are again brought into a common plane (as by being pressed against a shoulder in a mechanism), the same pre-load will exist in the bearing as existed when the surface was ground. Instead of the gauge 16 measuring the upper end of the inner race 12, however, the washer 23 is made of a very accurate thickness. The gauge takes into consideration the fact that the upper surface of the washer which it gauges is higher than the upper end of the inner race 12, and a compensation is made in the gauge for this fact. The gauge 16 is in two parts which are separated vertically by a spacer 142 which is of the same thickness as the washer 23. A check should be made from time to time to determine whether the washer 23 is worn or not; placing the washer 23 and the spacer 142 on a flat surface and laying an optical flat across them will determine whether the wear is great enough to require refinishing of the two elements. In initially setting the air nozzles in the gauge, the spacer 142 is removed and the two halves are bolted together; then, if the nozzles are lowered over a flat, the pressure reading will indicate when they have been adjusted to equal distances from the flat. Replacement of the spacer then sets the nozzles at the proper spacing. The gauge 16 operates continuously while the operation is going on and, in the usual case, a pneumatic control will remove the grinding wheel from the work surface when the gauge determines that the levels of the ends of the inner and outer races are equal. The grinding wheel is then removed and the operator, by striking the actuating handle 97 of the gauge, will move the gauge away from the workpiece. Air is then admitted by a suitable valve into the underside of the piston 44, thus carrying the load of the springs 32 and permitting the removal of the cap screw 26, the clamping disk 25, and the washer 23. The finished workpiece may be then removed and replaced with an unfinished one.

It will be noted that a number of passages have been provided throughout the apparatus for supplying coolant to the workpiece during the grinding operation. Such a passage passes through the coolant ring 63 and passes into the lower body 27 by means of a commutating annular groove on the inner surface of the ring. The passage passes upwardly through the lower body 27 to the main body 20 and then opens under the workpiece. It will be understood that the workhead 36 will be driven by the pulley 68 to revolve the workpiece under the grinding wheel 15; the wheel is also rotating but is rotating about a horizontal axis at a right angle to the axis of rotation of the workhead.

Referring now to the gauge 16, it will be understood that because of the over-center toggle arrangement between the arm 85 and the arm 84, the arm will lie in either of two positions: either an operative gauging position over the workpiece, as determined by the stop screw 92, or an inoperative, non-gauging position, as determined by the stop screw 95. To move it from one position to another, the operator merely has to strike the actuating handle 97 and the machine continues the motion to the other position. Vertical adjustment of the gauge which lies in the outer end is permitted by the manipulation of the handle 107. It acts through the nut 105 and the stud 104 to move the extension 101 upwardly and downwardly relative to the frictionless hinge provided by the reed supports 98 and 99. A further adjustment is possible by loosening the bolts 112, and 113 and sliding the gauge supporting member 111 vertically by adjusting the screws 117 and 119.

Referring to the accessory 126 in FIG. 5, this device is used, of course, to set the adjusting collar 34 of a cartridge 17. The cartridge is placed in the apparatus and suitably clamped in place with the button 35 at the lower end of the vertical shaft 24 striking the inner end of the balance arm 135. A standard workpiece 11 is placed in the cartridge 17 and a weight 137 is placed in a suitable notch 136 of the outer end of the balance arf 135. The adjusting collar 34 is moved upwardly and downwardly on the lower end of the vertical shaft 24 until a point is reached at which the pressure of the springs 32 is balanced by the pressure of the balance arm 135. The details of the balance arm with respect to the locations of the notches and the nature of the weight 137 are, of course, matters of design and can be derived from the simple laws of physics. After a cartridge 17 has been adjusted in this manner for a given size of ball bearing 11, it is then placed in the grinding machine or may be stored, if desired, until it is ready for use.

It is obvious that minor changes may be made in the form and construction of the invention without departing from the material spirit thereof. It is not, however, desired to confine the invention to the exact form shown and described, but it is desired to include all such as properly come within the scope claimed.

The invention having been thus described, what is claimed as new and desired to secure by Letters Patent, is:

1. A machine for finishing an end surface of one race of an anti-friction bearing having two races, comprising a main body adapted to support the said one race of the bearing, a shaft extending through the main body, clamping means mounted on the shaft and adapted to engage the other race of the bearing, adjustable spring means for producing a predetermined force between the shaft and body to pre-load the bearing during finishing, and a linear actuator aligned with the shaft for rapidly appreciably reducing the said force on occasion.

2. A machine for finishing an end surface of one race of an anti-friction bearing having two races, comprising a main body adapted to support the said one race of the bearing, a shaft extending through the main body and bearing, a readily-removable clamping means mounted on one end of the shaft and adapted to engage the other race of the bearing, adjustable spring means associated with the other end of the shaft for producing a predetermined force between the shaft and body to pre-load the

bearing during finishing, and a linear actuator aligned with the shaft for rapidly appreciably reducing the said force on occasion.

3. A machine for finishing an end surface of one race of an anti-friction bearing having two races, comprising a base, a main body adapted to support the said one race of the bearing, a shaft extending through the main body, clamping means mounted on the shaft and adapted to engage the other race of the bearing, means for producing a force between the shaft and body, and means for rapidly appreciably reducing the said force on occasion, the last-named means being mounted in the base and being formed with a socket, the main body, shaft, clamping means, and means for producing a force being formed as an integral cartridge which is readily mounted in and removable from the said socket.

4. A machine for finishing an end surface of the outer race of an anti-friction bearing having an inner and an outer race, comprising a main body having a vertically-extending annular flange adapted to engage the lower surface of the said outer race of the bearing with its axis vertical, a vertical shaft extending through the main body and bearing, a readily-removable clamping means mounted on one end of the shaft and adapated to engage the upper surface of the inner race of the bearing, adjustable spring means associated with the other end of the shaft for producing a pre-determined force between the shaft and the body to pre-load the bearing during finishing, and a linear actuator aligned with the shaft for appreciably reducing the said force on occasion.

References Cited in the file of this patent

UNITED STATES PATENTS

1,722,494	Brunner	July 30, 1929
2,220,471	Balsiger	Nov 5, 1940
2,333,411	Cramer	Nov. 2, 1943
2,414,896	Richter	Jan. 28, 1947
2,677,269	Aller	May 4, 1954
2,683,983	Aller	June 20, 1954
2,798,347	Brady	July 9, 1957