US 20060165385A1

(19) United States

(12) Patent Application Publication (10) Pub. No.: US 2006/0165385 A1

Aoki (43) Pub. Date: Jul. 27, 2006

(54) METHOD AND ELECTRONIC EQUIPMENT FOR TRANSMITTING DATA TO OTHER ELECTRONIC EQUIPMENT ON A NETWORK

(75) Inventor: **Yukihiko Aoki**, Tokyo (JP)

Correspondence Address:
FINNEGAN, HENDERSON, FARABOW, GARRETT & DUNNER LLP
901 NEW YORK AVENUE, NW
WASHINGTON, DC 20001-4413 (US)

(73) Assignee: **Sony Corporation**

(21) Appl. No.: **11/356,957**

(22) Filed: **Feb. 21, 2006**

Related U.S. Application Data

(63) Continuation of application No. 09/516,900, filed on Mar. 1, 2000, now Pat. No. 7,039,293.

(30) **Foreign Application Priority Data**

Mar. 2, 1999 (JP) 11-054551

Publication Classification

(51) **Int. Cl.**
H04N 7/26 (2006.01)

(52) **U.S. Cl.** **386/112**

(57) **ABSTRACT**

A data transmission method in which an equipment receiving data is prohibited from displaying a noisy picture or issuing an unusual sound which might possibly destruct a speaker. When the operating mode is switched from the stop state (Stop) to the playback state (PB) to start outputting data recorded on a recording medium, a data recording and/or reproducing medium equipment **20** sets a broadcast connection counter or a point-to-point connection counter from 0 to 1 on transition of the DIF mode (digital input/output mode) from IN to OUT to set a connected state. The data recording and/or reproducing medium equipment **20** inserts a DIT of tf=1 before releasing the muting.

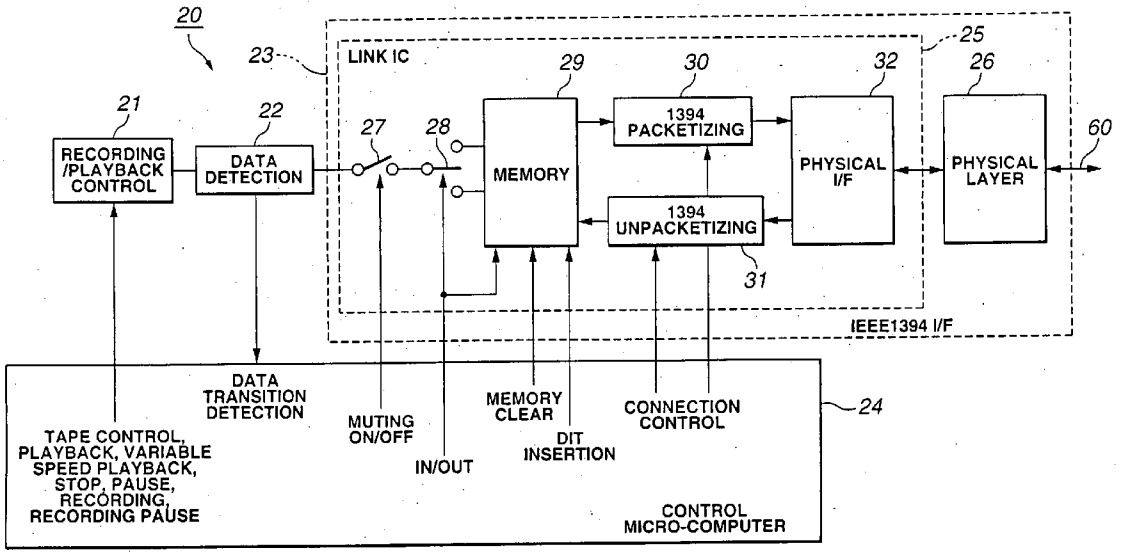

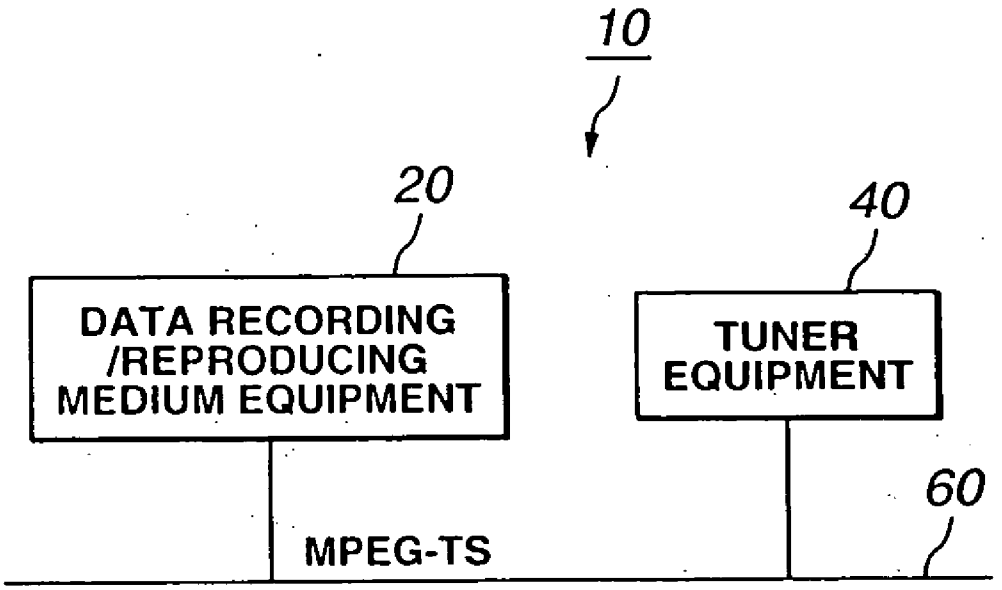
10
20
40
DATA RECORDING /REPRODUCING MEDIUM EQUIPMENT
TUNER EQUIPMENT
60
MPEG-TS

FIG.1

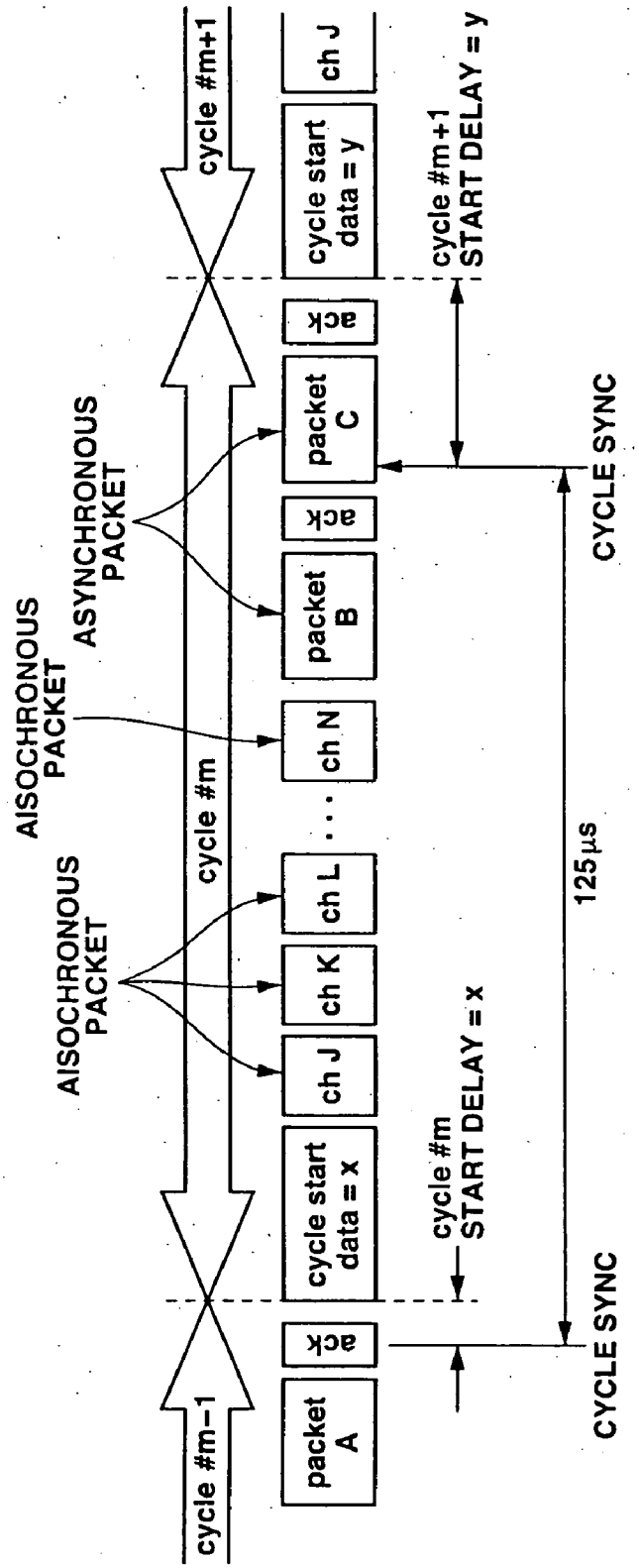
cycle #m-1
packet A
ack
cycle start data = x
ch J
ch K
ch L
ch N
packet B
ack
packet C
ack
cycle start data = y
ch J
cycle #m+1
cycle #m
cycle #m START DELAY = x
cycle #m+1 START DELAY = y
125μs
CYCLE SYNC
CYCLE SYNC
ISOCHRONOUS PACKET
ISOCHRONOUS PACKET
ASYNCHRONOUS PACKET

FIG.2

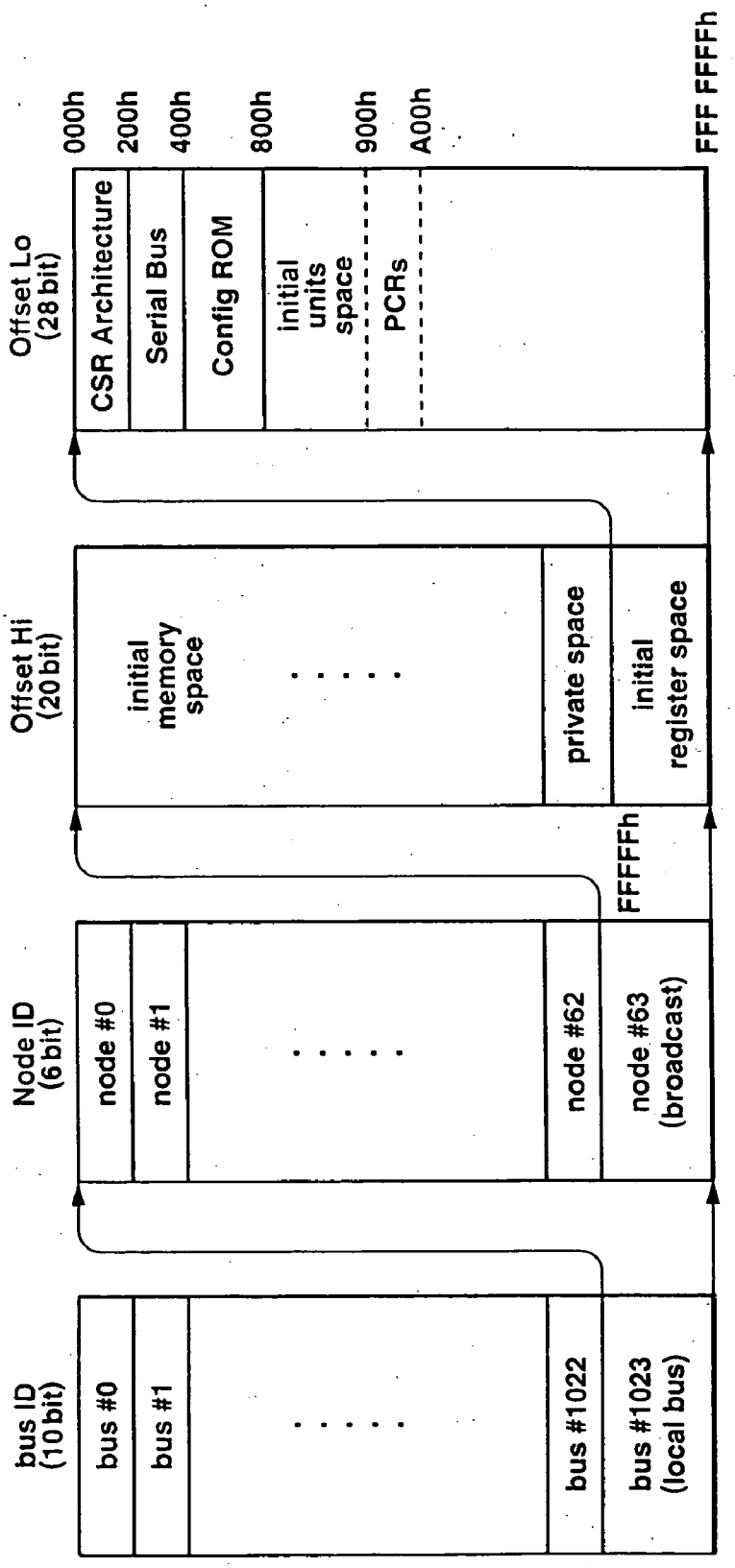
bus ID (10 bit)
bus #0
bus #1
bus #1022
bus #1023 (local bus)
Node ID (6 bit)
node #0
node #1
node #62
node #63 (broadcast)
FFFFFh
Offset Hi (20 bit)
initial memory space
private space
initial register space
Offset Lo (28 bit)
CSR Architecture
Serial Bus
Config ROM
initial units space
PCRs
000h
200h
400h
800h
900h
A00h
FFF FFFFh

FIG.3

OFFSET	NAME	OPERATION
000h	STATE_CLEAR	STATUS AND CONTROL INFORMATION
004h	STATE_SET	SET STATE_CLEAR BIT
008h	NODE_IDs	INDICATES 16-BIT NODE ID
00Ch	RESET_START	STARTS COMMAND RESET
018h-01Ch	SPLIT_TIMEOUT	PROVIDES MAX SPLIT TIME
200h	CYCLE_TIME	CYCLE TIME
210h	BUSY_TIMEOUT	PROVIDES RETRY LIMITATION
21Ch	BUS_MANAGER	INDICATES BUS MANAGER ID
220h	BANDWIDTH_AVAILABLE	INDICATES BAND ALLOCATABLE TO AISOCHRONOUS COMMUNICATION
224h-228h	CHANNELS_AVAILABLE	INDICATES USING STATE OF EACH CHANNEL

FIG.4

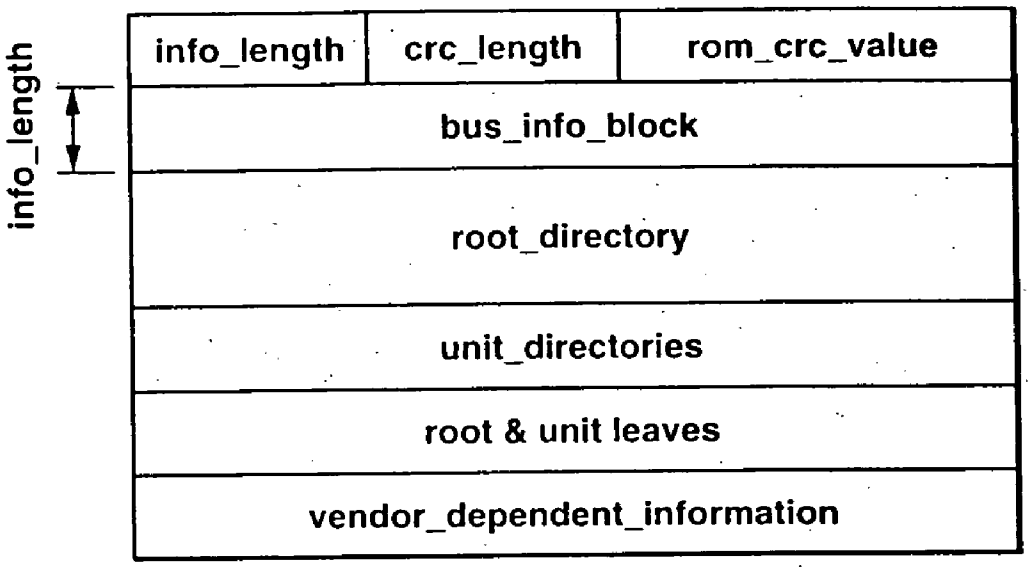
info_length
info_length
crc_length
rom_crc_value
bus_info_block
root_directory
unit_directories
root & unit leaves
vendor_dependent_information

FIG.5

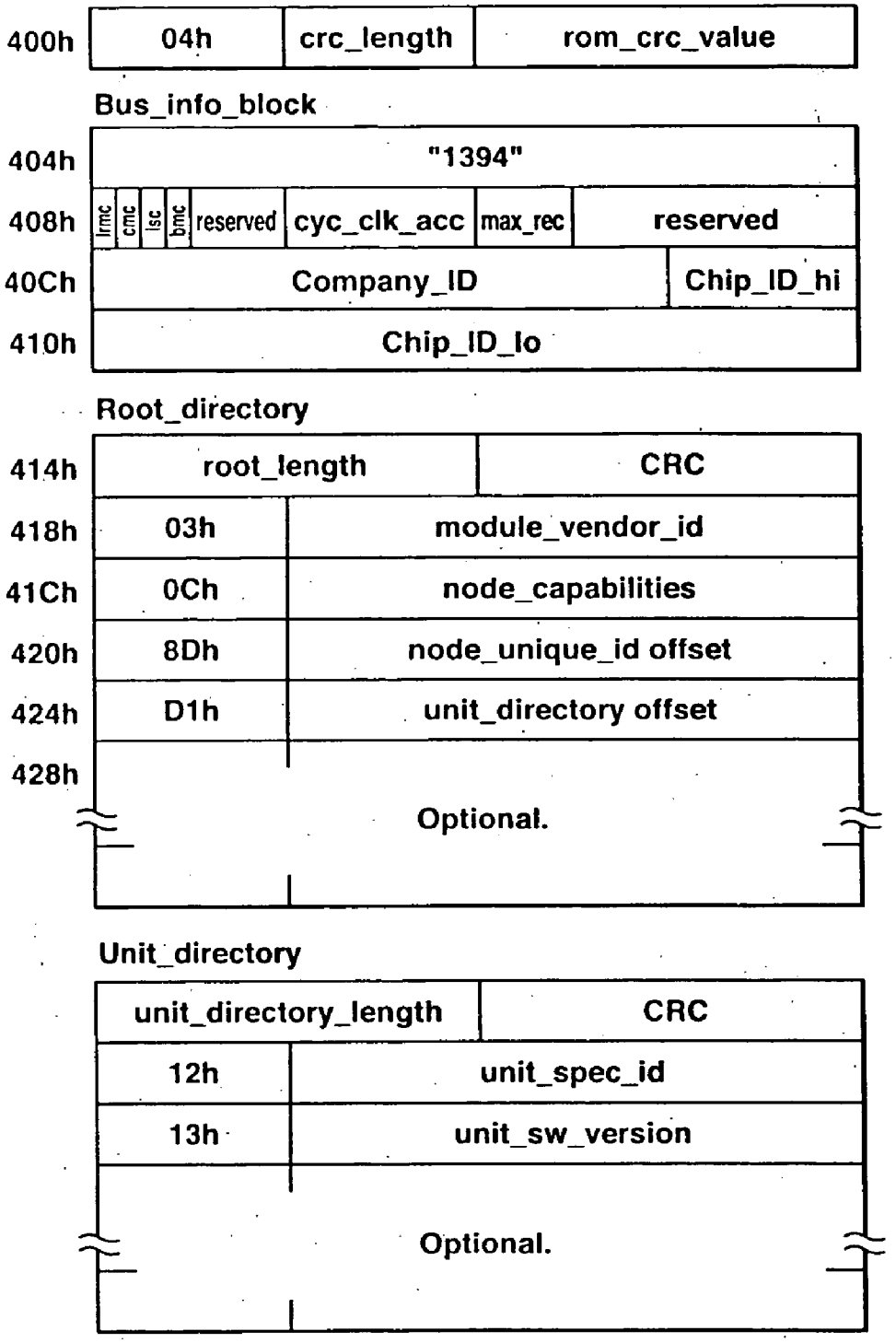
400h
04h
crc_length
rom_crc_value
Bus_info_block
404h
"1394"
408h
irmc
cmc
isc
bmc
reserved
cyc_clk_acc
max_rec
reserved
40Ch
Company_ID
Chip_ID_hi
410h
Chip_ID_lo
Root_directory
414h
root_length
CRC
418h
03h
module_vendor_id
41Ch
0Ch
node_capabilities
420h
8Dh
node_unique_id offset
424h
D1h
unit_directory offset
428h
Optional.
Unit_directory
unit_directory_length
CRC
12h
unit_spec_id
13h
unit_sw_version
Optional.

FIG.6

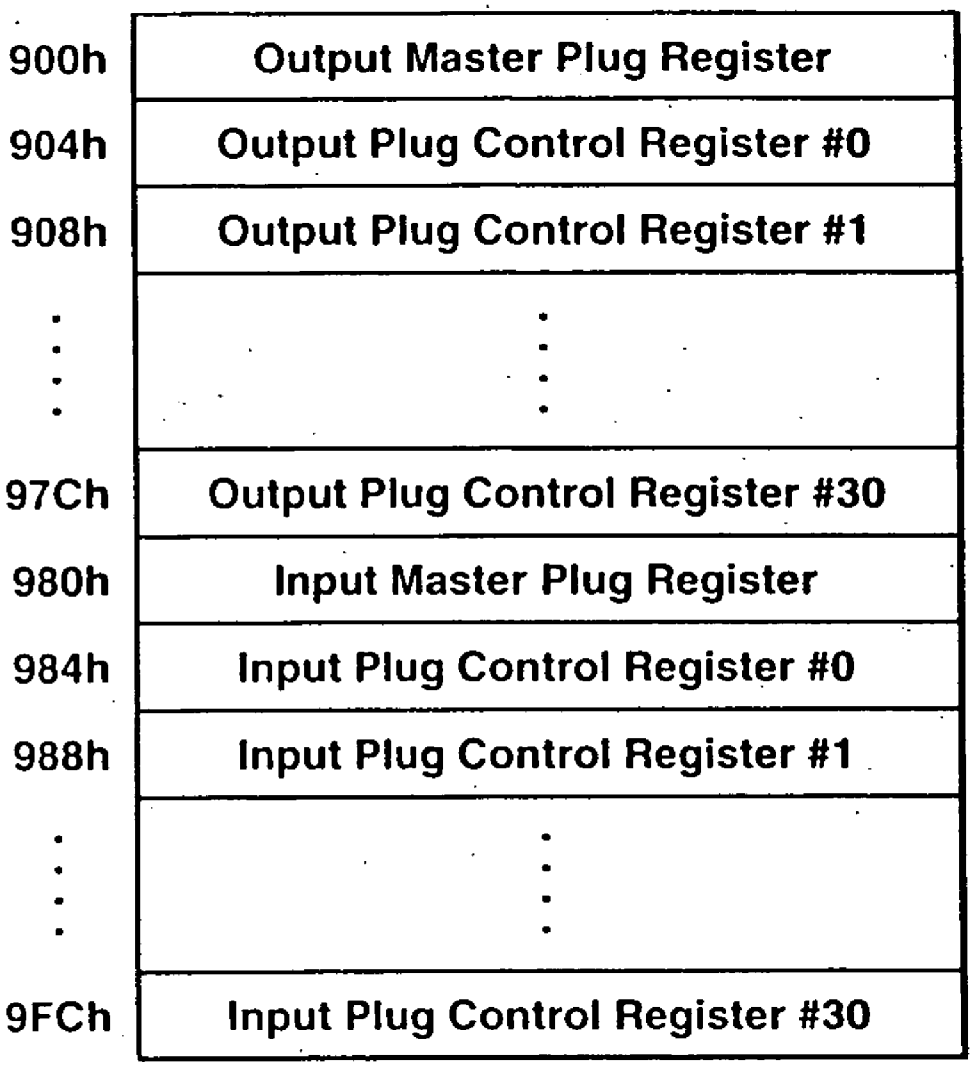
900h
Output Master Plug Register
904h
Output Plug Control Register #0
908h
Output Plug Control Register #1
97Ch
Output Plug Control Register #30
980h
Input Master Plug Register
984h
Input Plug Control Register #0
988h
Input Plug Control Register #1
9FCh
Input Plug Control Register #30

FIG.7

FIG.8A

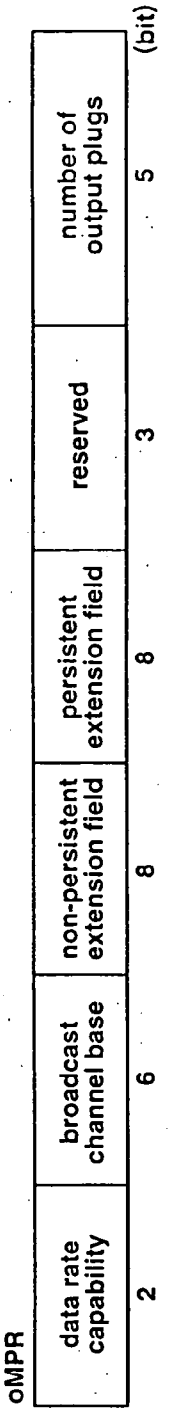

FIG.8B

FIG.8C

FIG.8D

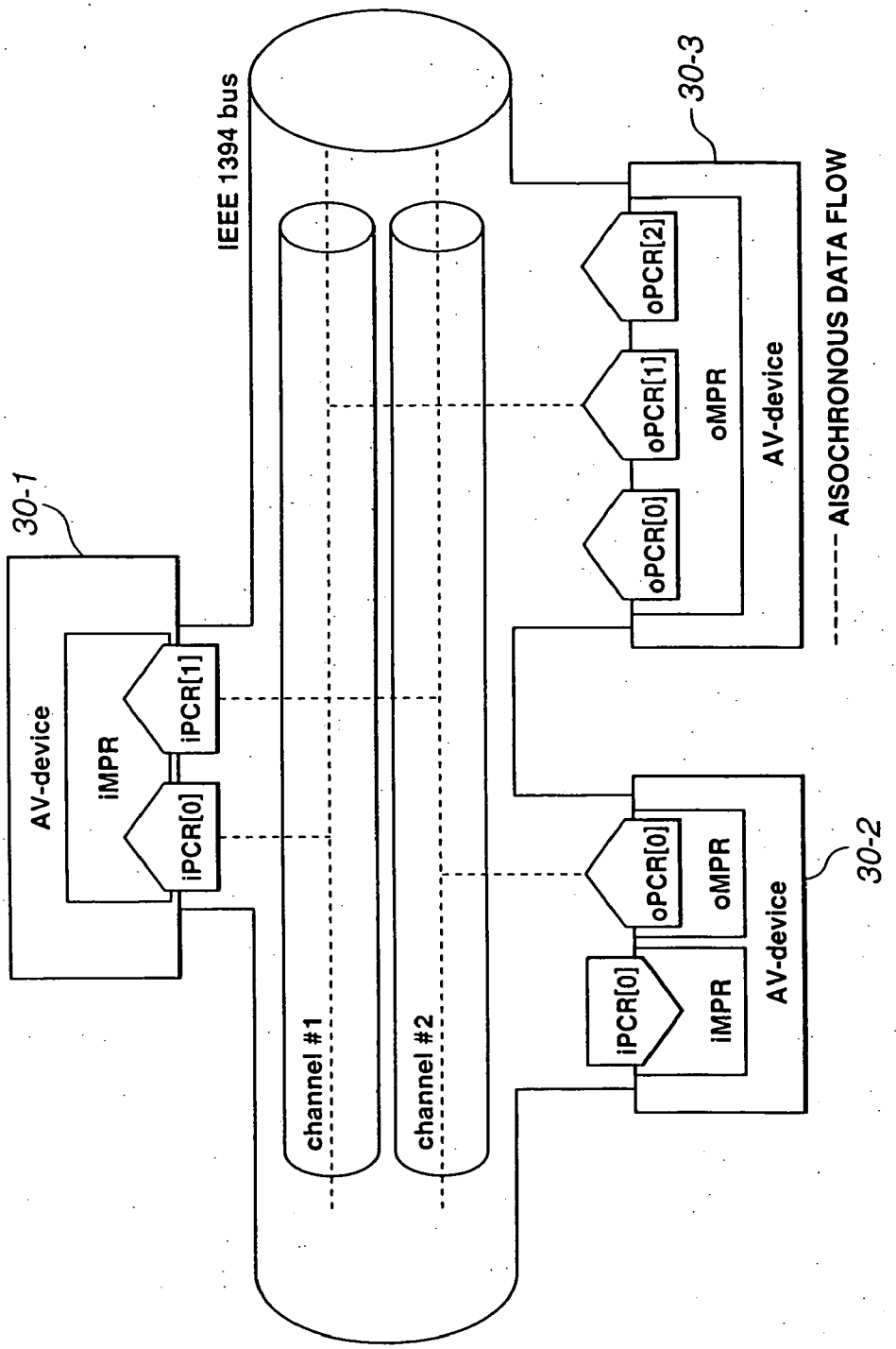
IEEE 1394 bus
30-1
AV-device
iMPR
iPCR[1]
iPCR[0]
channel #1
channel #2
30-3
oPCR[2]
oPCR[1]
oPCR[0]
oMPR
AV-device
30-2
oPCR[0]
oMPR
iPCR[0]
iMPR
AV-device
AISOCHRONOUS DATA FLOW

FIG.9

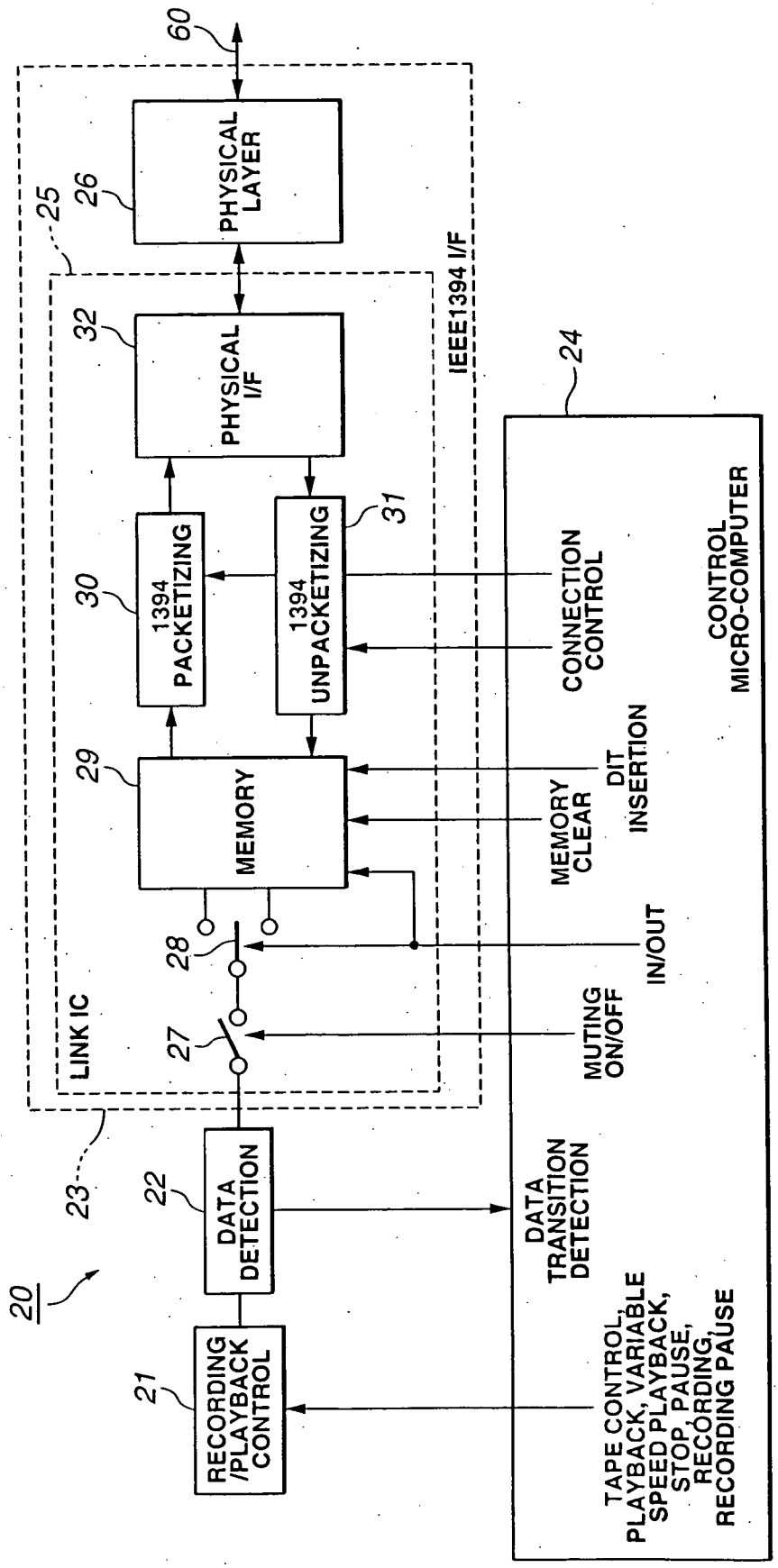
60
PHYSICAL LAYER
26
25
IEEE1394 I/F
32
PHYSICAL I/F
24
30
1394 PACKETIZING
31
1394 UNPACKETIZING
CONNECTION CONTROL
CONTROL MICRO-COMPUTER
29
MEMORY
MEMORY CLEAR
DIT INSERTION
28
IN/OUT
27
MUTING ON/OFF
LINK IC
23
22
DATA DETECTION
DATA TRANSITION DETECTION
20
21
RECORDING /PLAYBACK CONTROL
TAPE CONTROL, PLAYBACK, VARIABLE SPEED PLAYBACK, STOP, PAUSE, RECORDING, RECORDING PAUSE

FIG.10

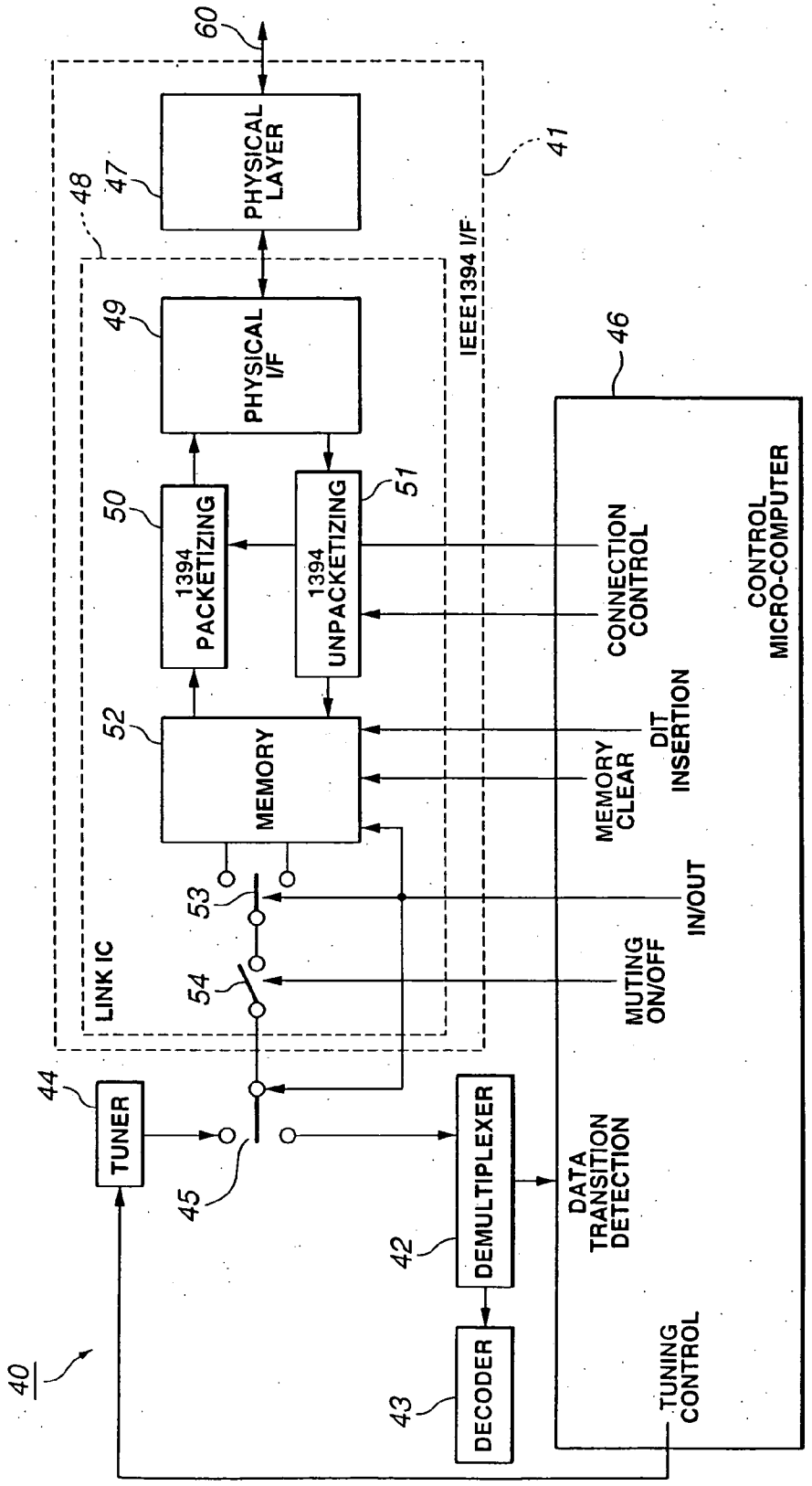
60
PHYSICAL LAYER
47
48
41
IEEE1394 I/F
49
PHYSICAL I/F
46
50
1394 PACKETIZING
51
1394 UNPACKETIZING
CONNECTION CONTROL
CONTROL MICRO-COMPUTER
52
MEMORY
MEMORY CLEAR
DIT INSERTION
53
IN/OUT
54
MUTING ON/OFF
LINK IC
44
TUNER
45
DEMULTIPLEXER
DATA TRANSITION DETECTION
42
DECODER
43
TUNING CONTROL
40

FIG.11

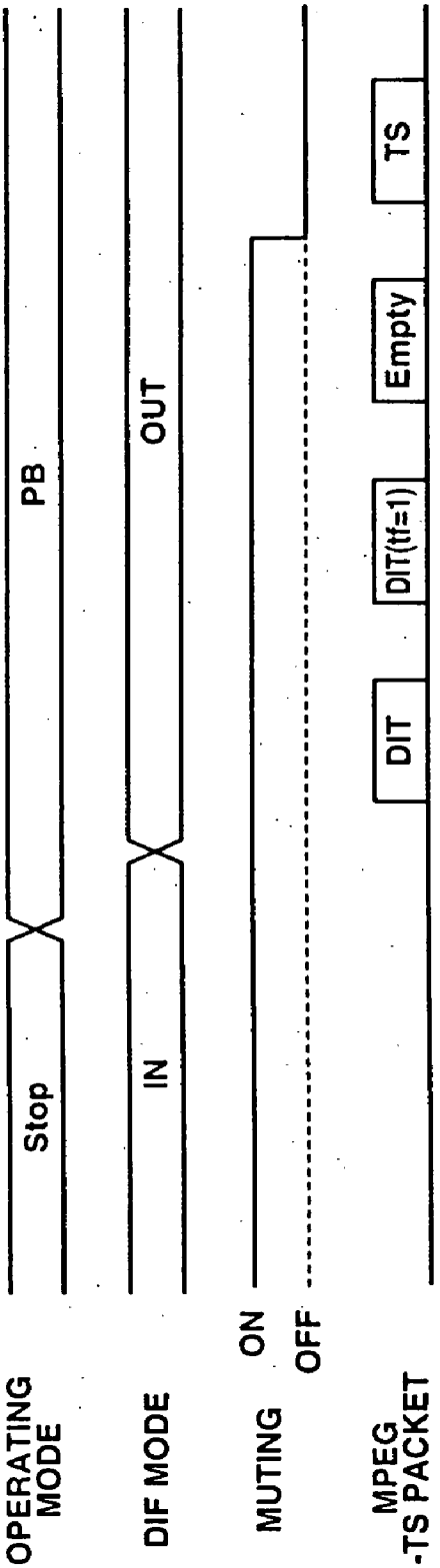
OPERATING MODE
Stop
PB
DIF MODE
IN
OUT
MUTING
ON
OFF
MPEG -TS PACKET
DIT
DIT(tf=1)
Empty
TS

FIG.12

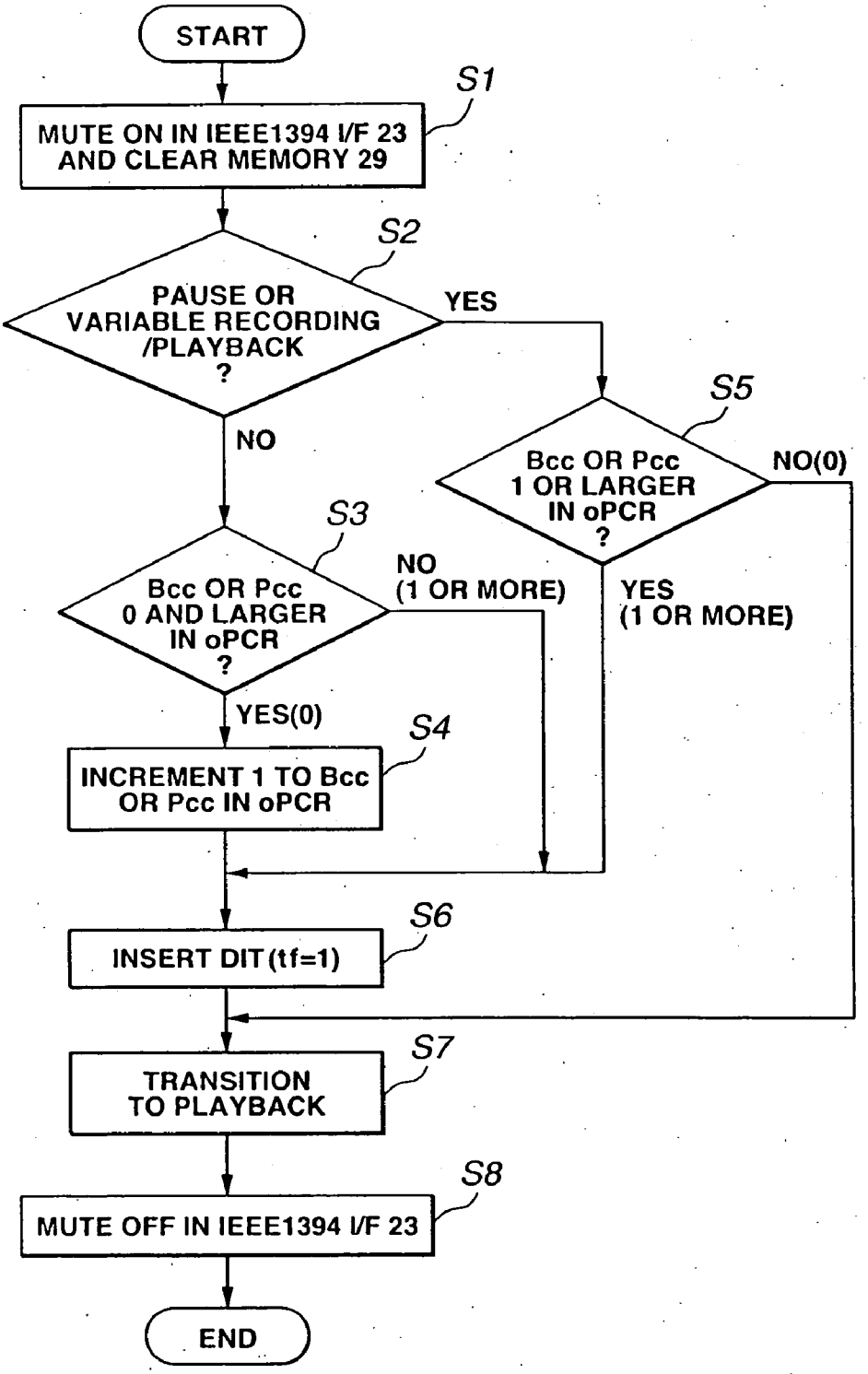
START
S1
MUTE ON IN IEEE1394 I/F 23 AND CLEAR MEMORY 29
S2
PAUSE OR VARIABLE RECORDING /PLAYBACK ?
YES
NO
S5
Bcc OR Pcc 1 OR LARGER IN oPCR ?
NO(0)
YES (1 OR MORE)
S3
Bcc OR Pcc 0 AND LARGER IN oPCR ?
NO (1 OR MORE)
YES(0)
S4
INCREMENT 1 TO Bcc OR Pcc IN oPCR
S6
INSERT DIT (tf=1)
S7
TRANSITION TO PLAYBACK
S8
MUTE OFF IN IEEE1394 I/F 23
END

FIG.13

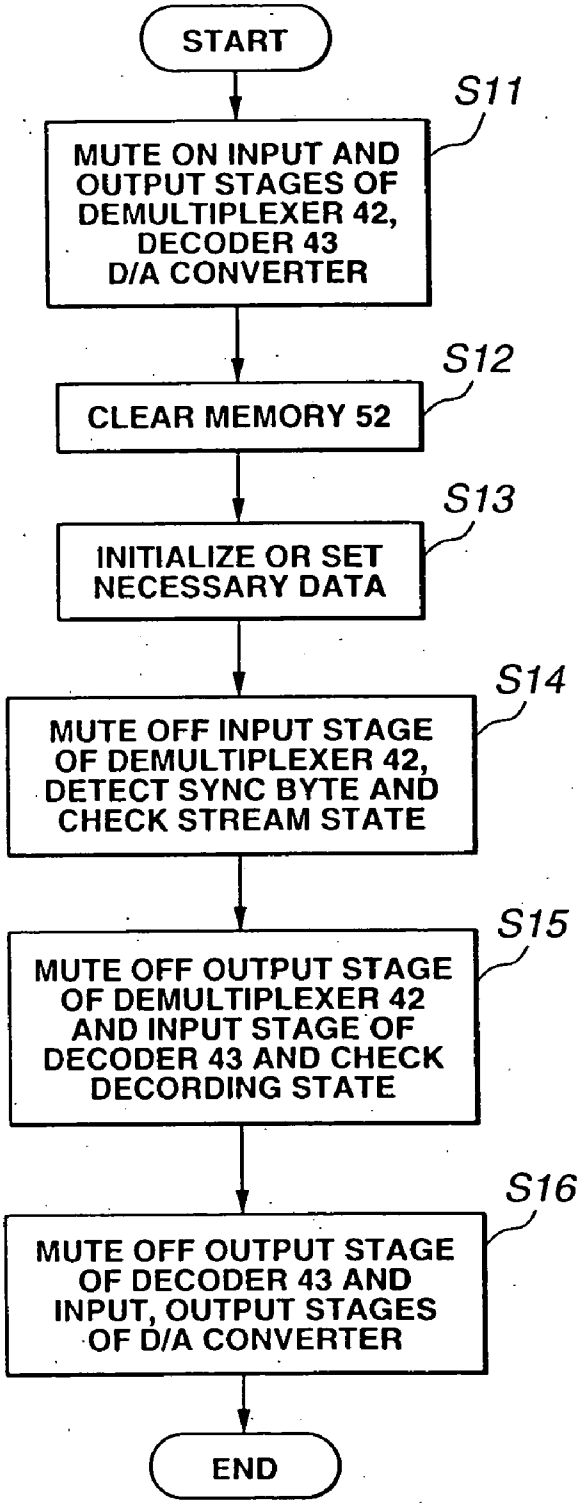
START
S11
MUTE ON INPUT AND OUTPUT STAGES OF DEMULTIPLEXER 42, DECODER 43 D/A CONVERTER
S12
CLEAR MEMORY 52
S13
INITIALIZE OR SET NECESSARY DATA
S14
MUTE OFF INPUT STAGE OF DEMULTIPLEXER 42, DETECT SYNC BYTE AND CHECK STREAM STATE
S15
MUTE OFF OUTPUT STAGE OF DEMULTIPLEXER 42 AND INPUT STAGE OF DECODER 43 AND CHECK DECORDING STATE
S16
MUTE OFF OUTPUT STAGE OF DECODER 43 AND INPUT, OUTPUT STAGES OF D/A CONVERTER
END

FIG.14

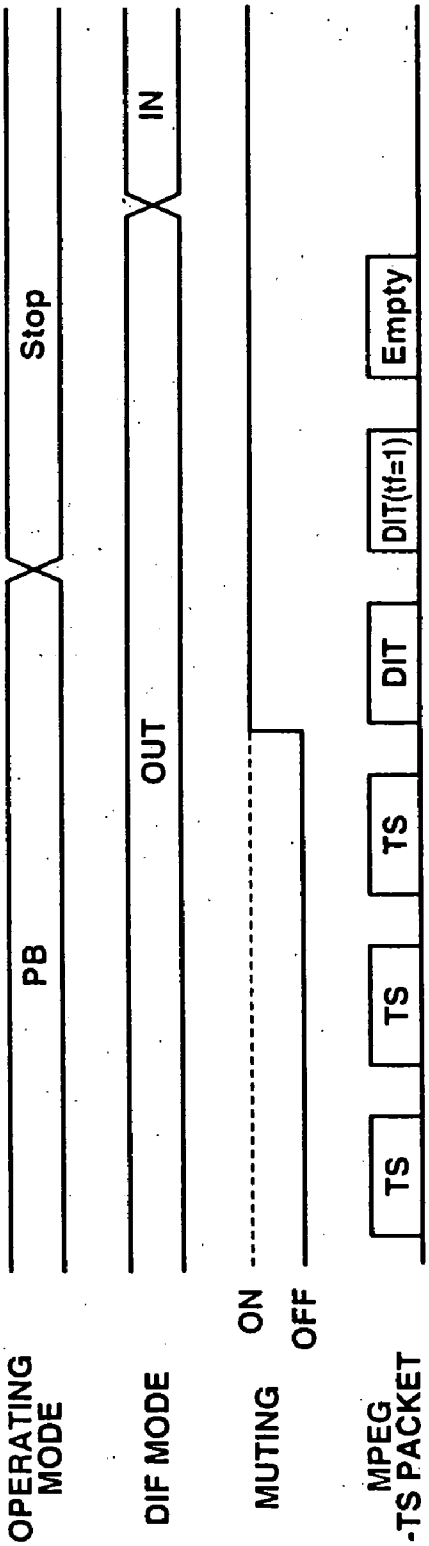
OPERATING MODE
PB
Stop
DIF MODE
OUT
IN
MUTING
ON
OFF
MPEG -TS PACKET
TS
TS
TS
DIT
DIT(ft=1)
Empty

FIG.15

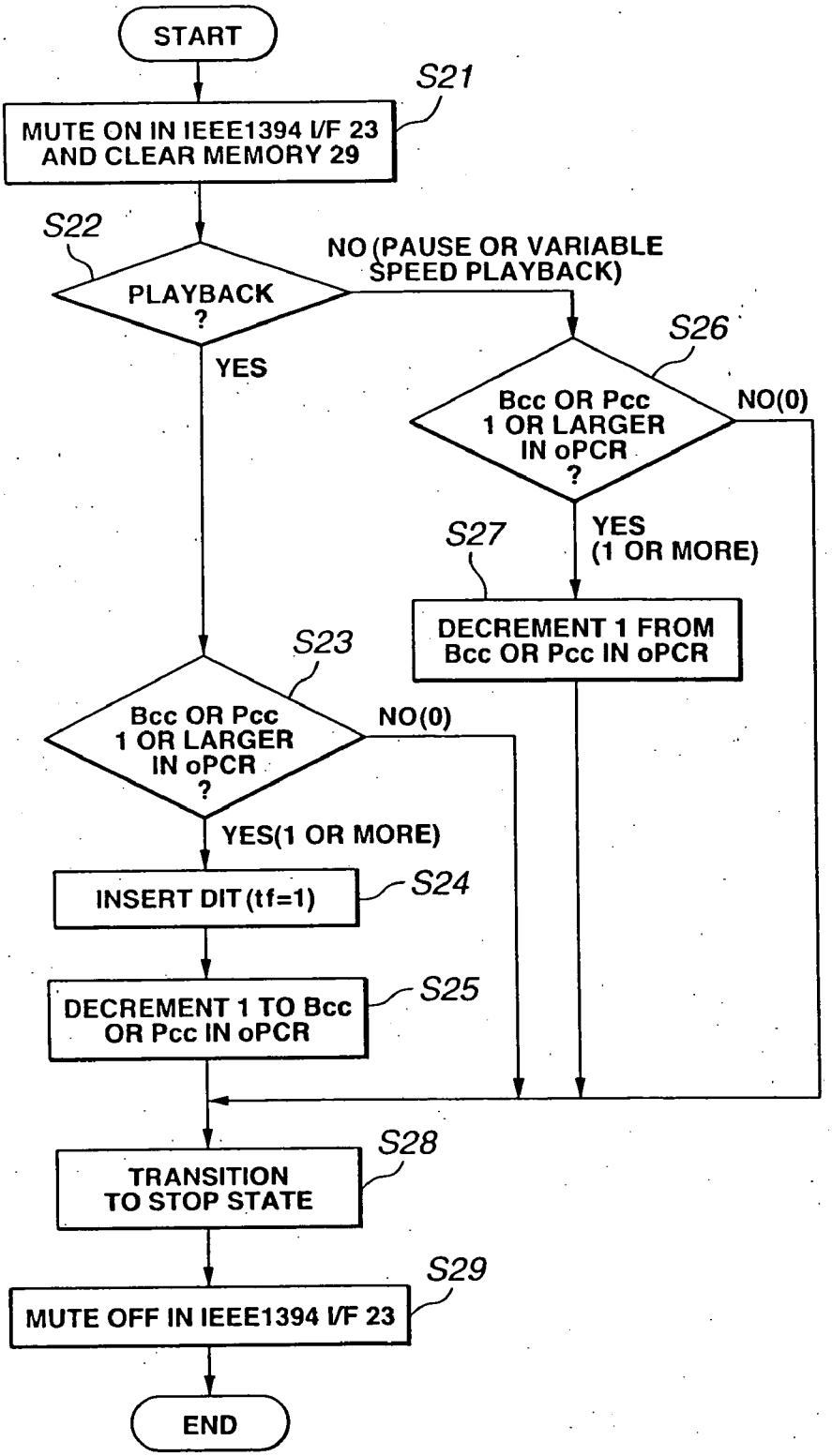
START
S21
MUTE ON IN IEEE1394 I/F 23 AND CLEAR MEMORY 29
S22
PLAYBACK ?
NO (PAUSE OR VARIABLE SPEED PLAYBACK)
YES
S26
Bcc OR Pcc 1 OR LARGER IN oPCR ?
NO(0)
S27
YES (1 OR MORE)
DECREMENT 1 FROM Bcc OR Pcc IN oPCR
S23
Bcc OR Pcc 1 OR LARGER IN oPCR ?
NO(0)
YES(1 OR MORE)
INSERT DIT (tf=1)
S24
DECREMENT 1 TO Bcc OR Pcc IN oPCR
S25
TRANSITION TO STOP STATE
S28
MUTE OFF IN IEEE1394 I/F 23
S29
END

FIG.16

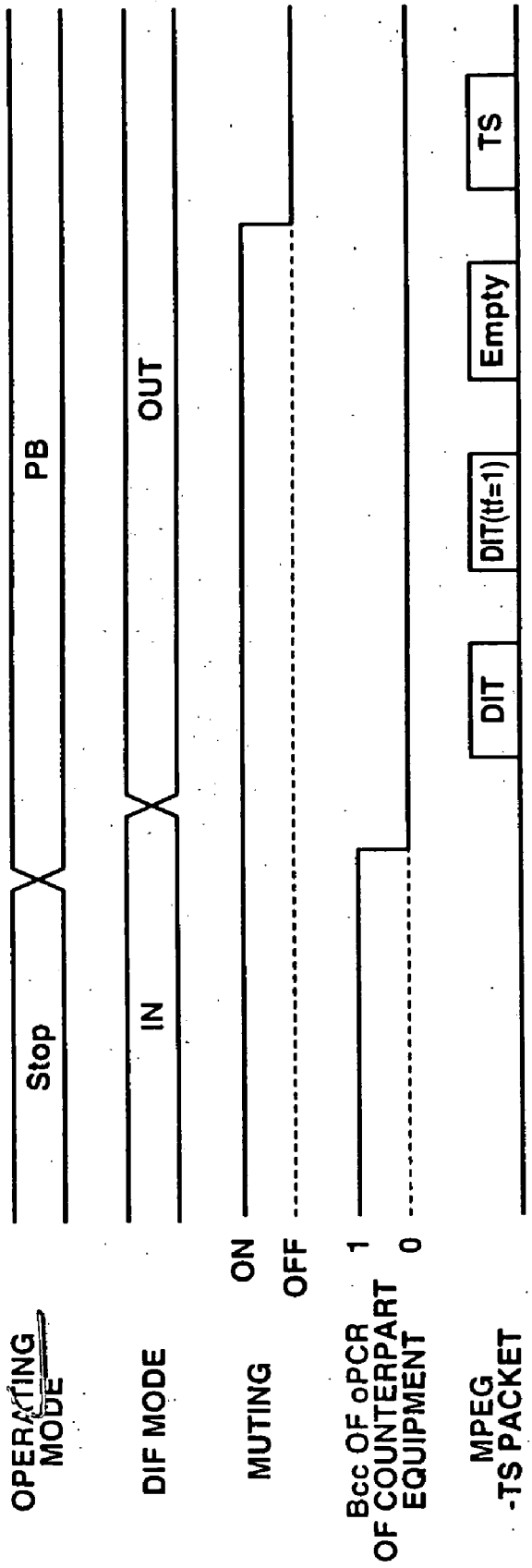
OPERATING MODE
Stop
PB
DIF MODE
IN
OUT
MUTING
ON
OFF
Bcc OF oPCR OF COUNTERPART EQUIPMENT
1
0
MPEG -TS PACKET
DIT
DIT(tf=1)
Empty
TS

FIG.17

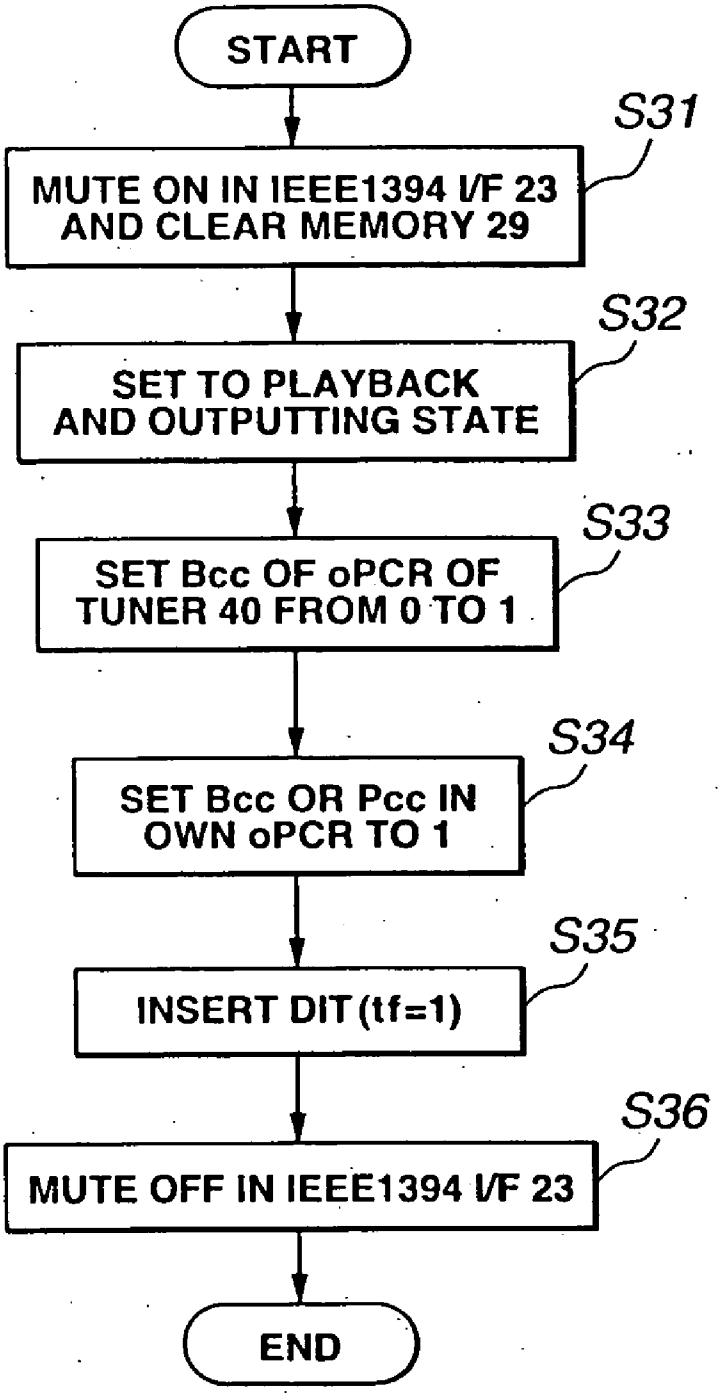
START
S31
MUTE ON IN IEEE1394 I/F 23 AND CLEAR MEMORY 29
S32
SET TO PLAYBACK AND OUTPUTTING STATE
S33
SET Bcc OF oPCR OF TUNER 40 FROM 0 TO 1
S34
SET Bcc OR Pcc IN OWN oPCR TO 1
S35
INSERT DIT (tf=1)
S36
MUTE OFF IN IEEE1394 I/F 23
END

FIG.18

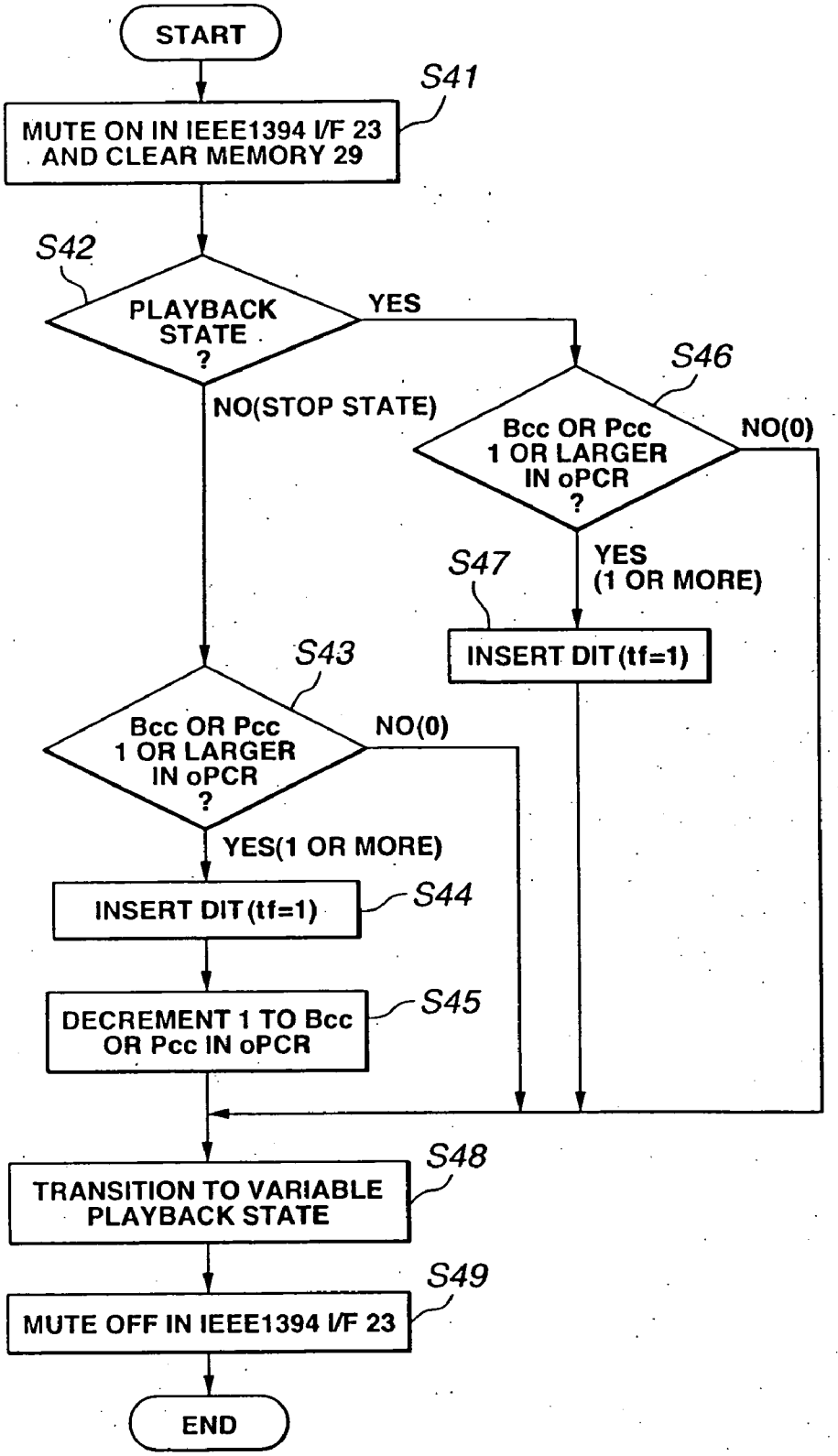
START
S41
MUTE ON IN IEEE1394 I/F 23 AND CLEAR MEMORY 29
S42
PLAYBACK STATE ?
YES
NO(STOP STATE)
S46
Bcc OR Pcc 1 OR LARGER IN oPCR ?
NO(0)
S47
YES (1 OR MORE)
INSERT DIT (tf=1)
S43
Bcc OR Pcc 1 OR LARGER IN oPCR ?
NO(0)
YES(1 OR MORE)
INSERT DIT (tf=1)
S44
DECREMENT 1 TO Bcc OR Pcc IN oPCR
S45
TRANSITION TO VARIABLE PLAYBACK STATE
S48
MUTE OFF IN IEEE1394 I/F 23
S49
END

FIG.19

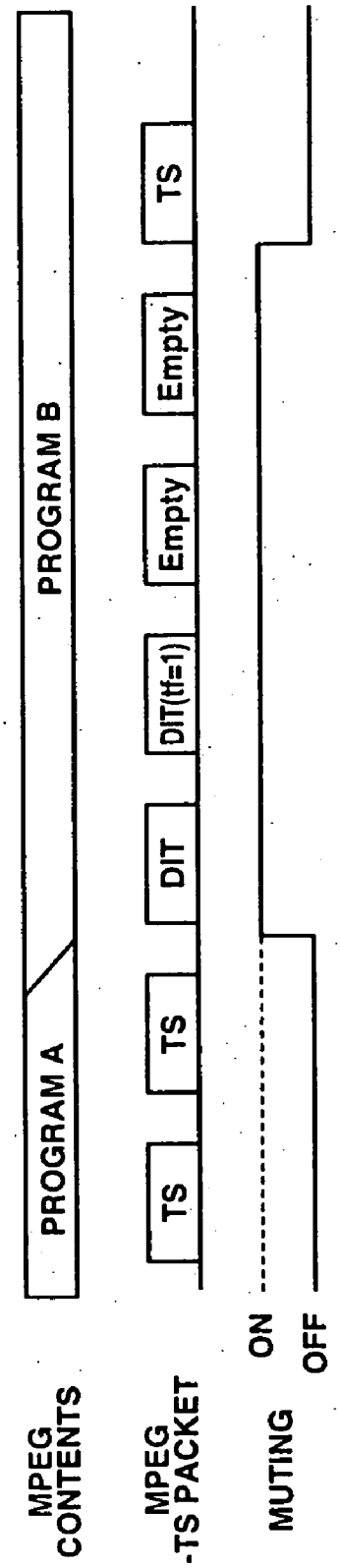
MPEG CONTENTS
PROGRAM A
PROGRAM B
MPEG -TS PACKET
TS
TS
DIT
DIT(tf=1)
Empty
Empty
TS
MUTING
ON
OFF

FIG.20

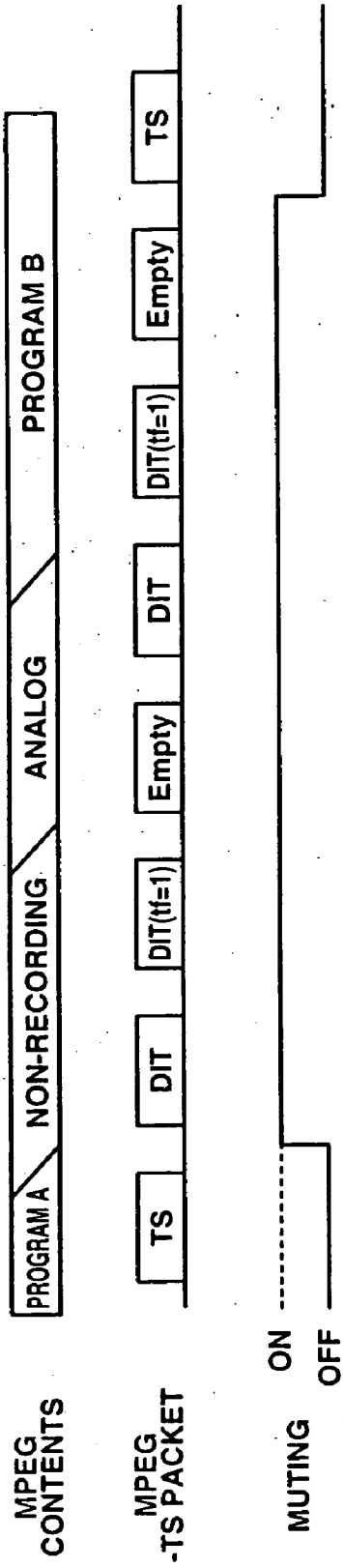
MPEG CONTENTS
PROGRAM A
NON-RECORDING
ANALOG
PROGRAM B
MPEG -TS PACKET
TS
DIT
DIT(tf=1)
Empty
DIT
DIT(tf=1)
Empty
TS
MUTING
ON
OFF

FIG.21

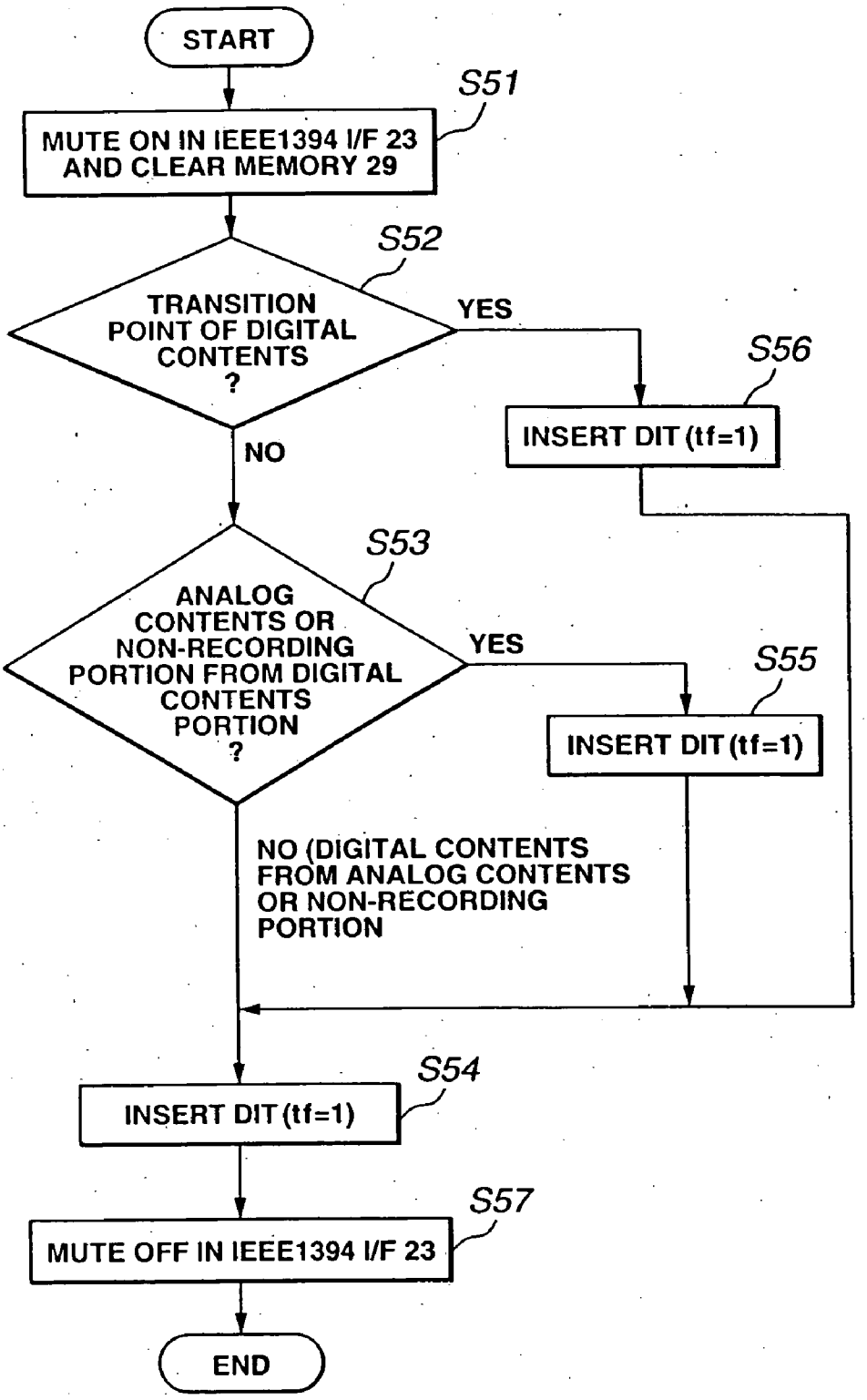
START
S51
MUTE ON IN IEEE1394 I/F 23 AND CLEAR MEMORY 29
S52
TRANSITION POINT OF DIGITAL CONTENTS ?
YES
NO
S56
INSERT DIT (tf=1)
S53
ANALOG CONTENTS OR NON-RECORDING PORTION FROM DIGITAL CONTENTS PORTION ?
YES
S55
INSERT DIT (tf=1)
NO (DIGITAL CONTENTS FROM ANALOG CONTENTS OR NON-RECORDING PORTION
S54
INSERT DIT (tf=1)
S57
MUTE OFF IN IEEE1394 I/F 23
END

FIG.22

METHOD AND ELECTRONIC EQUIPMENT FOR TRANSMITTING DATA TO OTHER ELECTRONIC EQUIPMENT ON A NETWORK

BACKGROUND OF THE INVENTION

[0001] 1. Field of the Invention

[0002] This invention relates to a data transmission method for transmitting/receiving data on a network comprised of plural interconnected electronic equipment, and to an electronic equipment in such network.

[0003] 2. Description of Prior Art

[0004] In recent years, it is contemplated to interconnect variable equipment having ports for external communication, such as a set top box, oriented to e.g., digital satellite broadcasting, to construct a network, which is to be used.

[0005] In such network system, each equipment packetizes e.g., MPEG data, over a network cable, such as serial buses, and transmits the packetized data as a transport stream. Meanwhile, in the above-described network system, there lacks support in the meaning of advising other equipment of discontinuity points in the stream, such as data transition points.

[0006] Thus, if, in such network system, in communication between optional equipment, an unpredictable unusual stream which will cause changes in the time axis is suddenly inputted to a demultiplexer or decoder in the receiving side equipment, hang-up is occasionally produced in the demultiplexer or decoder. Also, in such network system, there is raised such a problem that an equipment which has received the unusual stream displays a noisy picture or destructs a speaker.

SUMMARY OF THE INVENTION

[0007] It is therefore an object of the present invention to provide a data transmission method for data transmission/reception in a network system in which there is no risk of an equipment displaying a noisy picture on data reception or outputting an abnormal sound which might destroy a speaker.

[0008] It is another object of the present invention to provide an equipment in such network system.

[0009] In one aspect, the present invention provides a method for transmitting data in which the data is transmitted/received on a network in which a plurality of electronic equipment are interconnected over a serial bus interface; and which includes a detection step of detecting the timing of inserting discontinuity information data indicating discontinuity of the contents into contents of the data to be recorded and/or reproduced for a recording medium and a step of inserting the discontinuity information data into the data on detection of the timing of inserting the discontinuity information data in the detection step.

[0010] In this data transmitting method, the discontinuity information data of the data recorded and/or reproduced for the recording medium is inserted to indicate that the time axis of the data contents is being changed.

[0011] In the method for transmitting data in which the data is transmitted/received on a network in which a plurality of electronic equipment are interconnected over a serial bus interface, according to the present invention, discontinuity information data indicating discontinuity of contents of data recorded and/or reproduced for the recording medium is inserted into the data on detection of the timing of insertion of the discontinuity information data. By so doing, the electronic equipment receiving the data outputted to outside is able to comprehend that the time axis of the data contents is changing to render it possible to evade hang-up of each component as well as to evade displaying a noisy picture or outputting an unusual sound which possibly destructs a speaker.

[0012] In another aspect, the present invention provides a method for transmitting data in which the data is transmitted/received on a network in which a plurality of electronic equipment are interconnected over a serial bus interface and which includes a detection step of detecting the timing of inserting discontinuity information data indicating the discontinuity of the contents into contents received from outside through a communication medium different from the serial bus interface, and a step of inserting the discontinuity information data into the data on detection of the timing of inserting the discontinuity information data in the detection step.

[0013] In this data transmitting method, the discontinuity information data of the data received from outside over a communication medium different from the serial bus interface is inserted to indicate that the time axis of the data contents is being changed.

[0014] In the method for transmitting data in which the data is transmitted/received on a network in which a plurality of electronic equipment are interconnected over a serial bus interface, according to the present invention, discontinuity information data indicating discontinuity of contents of data received from outside over a communication medium different from the serial bus interface is inserted into the data on detection of the timing of insertion of the discontinuity information data. By so doing, the electronic equipment receiving the data outputted to outside is able to comprehend that the time axis of the data contents is changing to render it possible to evade hang-up of each component as well as to evade-displaying a noisy picture or outputting an unusual sound which might destruct the speaker.

[0015] In still another aspect, the present invention provides an electronic equipment in which the data is transmitted/received on a network constructed by interconnecting a plurality of electronic equipment over a serial bus interface, and which includes means for generating discontinuity information data indicating discontinuity of the data, means for detecting the timing of inserting the discontinuity information data into contents of the data to be recorded and/or reproduced for a recording medium and means for inserting the discontinuity information data into the data on detection of the timing of inserting the discontinuity information data by the detection means.

[0016] In the electronic equipment according to the present invention, the discontinuity information data of the data received from outside over a communication medium different from the serial bus interface is generated and inserted to indicate that the time axis of the data contents is being changed.

[0017] In the electronic equipment of the present invention, in which the data is transmitted/received on a network

constructed by interconnecting a plurality of electronic equipment over a serial bus interface, there is provided means for generating discontinuity information data of the data recorded on the recording medium, and the discontinuity information data generated by this generating means and which indicates discontinuity in the data contents is inserted into the data on detection of the timing for inserting the discontinuity information data. By so doing, the electronic equipment receiving the data outputted to outside is able to comprehend that the time axis of the data contents is changing to render it possible to evade hang-up of each component as well as to evade displaying a noisy picture or outputting an unusual sound which might destruct the speaker.

[0018] In yet another aspect, the present invention provides an electronic-equipment in which the data is transmitted/received on a network constructed by interconnecting a plurality of electronic equipment over a serial bus interface, and-which includes tuning means for tuning data received from outside over a communication medium different from the serial bus interface and generating means for generating discontinuity information data of data received through the serial bus interface and/or the tuning means. The generating means inserts the generated discontinuity information data into contents of data received through the tuning means.

[0019] In this electronic equipment, the discontinuity information data of the data received from outside over a communication medium different from the serial bus interface is generated and inserted to indicate that the time axis of the data contents is being changed.

[0020] In the electronic equipment of the present invention, in which the data is transmitted/received on a network constructed by interconnecting a plurality of electronic equipment over a serial bus interface, there are provided tuning means for tuning data received from outside over a communication medium different from the serial bus interface and generating means for generating discontinuity information data of data received through the serial bus interface and/or the tuning means. The discontinuity information data generated by the generating means is introduced into the contents of data received by the tuning means. By so doing, the electronic equipment receiving the data outputted to outside is able to comprehend that the time axis of the data contents is changing to render it possible to evade bang-up of each component as well as to evade displaying a noisy picture or outputting an unusual sound which might destruct the speaker.

BRIEF DESCRIPTION OF THE DRAWINGS

[0021] **FIG. 1** is a block diagram for illustrating the structure of an IEEE 1394 network embodying the present invention.

[0022] **FIG. 2** shows a cyclic structure of data transmission of the equipment interconnected over IEEE 1394.

[0023] **FIG. 3** illustrates the structure of an address space of a CSR architecture.

[0024] **FIG. 4** illustrates the position, name and operation of main CSR.

[0025] **FIG. 5** illustrates the general ROM format.

[0026] **FIG. 6** illustrates details of a bus information block, a root directory and a unit directory.

[0027] **FIG. 7** illustrates the structure of PCR.

[0028] **FIG. 8** illustrates the structure of oMPR, oPCR, iMPR and iPCR.

[0029] **FIG. 9** illustrates the relationship between the plug, plug control register and an aisochronous channel.

[0030] **FIG. 10** is a block diagram showing the structure of a data recording-and/or reproducing medium equipment on the IEEE 1394 network.

[0031] **FIG. 11** is a block diagram showing the structure of a tuner equipment on the IEEE 1394 network.

[0032] **FIG. 12** is a timing chart for DIT insertion in case of transition of the data recording and/or reproducing medium equipment from a stop state to a playback state.

[0033] **FIG. 13** is a flowchart for illustrating a sequence of steps in DIT insertion in case of transition of the data recording and/or reproducing medium equipment from a stop state to a playback state.

[0034] **FIG. 14** is a flowchart for illustrating a sequence of steps in a tuner equipment in receiving a stream having DIT inserted therein.

[0035] **FIG. 15** is a timing chart for DIT insertion in case of transition of the data recording and/or reproducing medium equipment from the playback state to the stop state.

[0036] **FIG. 16** is a flowchart for illustrating a sequence of steps in DIT insertion in case of transition of the data recording and/or reproducing medium equipment from the playback state to the stop state.

[0037] **FIG. 17** is a timing chart for DIT insertion in case a data recording and/or reproducing medium equipment acquires and outputs a channel used by the tuner equipment.

[0038] **FIG. 18** is a flowchart for illustrating a sequence of steps in DIT insertion in case a data recording and/or reproducing medium equipment acquires and outputs a channel used by the tuner equipment.

[0039] **FIG. 19** is a flowchart for illustrating a sequence of steps performed by a data recording and/or reproducing medium equipment in DIT-insertion in case a stream outputted by a data recording and/or reproducing medium equipment is unable to cope with variable speed reproduction.

[0040] **FIG. 20** is a timing chart for DIT insertion in case two digital contents different from each other have been recorded in succession on a recording medium of the data recording and/or reproducing medium equipment.

[0041] **FIG. 21** is a timing chart for DIT insertion in case digital contents, analog contents an non-recorded portion have been recorded in a commingled state on a recording medium of a data recording and/or reproducing medium equipment.

[0042] **FIG. 22** is a flowchart for illustrating a sequence of steps performed by a data recording and/or reproducing medium equipment in DIT insertion in case digital contents, analog contents an non-recorded portion have been recorded

in a commingled state on a recording medium of a data recording and/or reproducing medium equipment.

DESCRIPTION OF THE PREFERRED EMBODIMENTS

[0043] Referring to the drawings, preferred embodiments of according to the present invention will be explained in detail.

[0044] The present invention is embodied in a network **10** comprised of plural electronic equipment over an IEEE 1394 serial bus **60** conforming to the IEEE Std. 1394-1995 IEEE standard for a high performance serial bus recognized by the IEEE (The Institute of Electrical and Electronics Engineers, Inc.). This network is referred to herein as IEEE 1394 network. Here, it is assumed that two electronic equipment on the IEEE 1394 network, namely a data recording and/or reproducing medium equipment **20** and a tuner equipment **40**, are being handled and data transmission/reception takes place between these two equipment.

[0045] In the following explanation, the data recording and/or reproducing medium equipment **20** is an electronic equipment of the so-called digital home video system (D)-VHS) such as a video tape recorder (VTR), audio visual hard disc drive (AV-HDD) or a digital video disc (DVD). The data recording and/or reproducing medium equipment **20** records MPEG data, compressed in accordance with the so-called MPEG (Moving Picture Experts Group) system, on a tape or a disc as a recording medium, not shown.

[0046] The tuner equipment **40**, on the other hand, is an electronic equipment having a tuner function, such as an integrated receiver decoder for digital satellite broadcast, or a digital television (DTV), and transmits/receives MPEG data.

[0047] In the IEEE 1394 network **10**, MPEG data, reproduced and packetized by the data recording and/or reproducing medium equipment **20**, is transmitted as a transport stream, abbreviated herein to MPEG-TS, to the tuner equipment **40**, which then unpacketizes and expands the received MPEG-TS. Also, in the IEEE 1394 network **10**; the MPEG-TS, received and unpacketized by the tuner equipment **40**, are transmitted to the data recording and/or reproducing medium equipment **20**, which then unpacketizes the received MPEG-TS to record the unpacketized data on the recording medium.

[0048] The IEEE 1394 interface, to which each equipment is connected, is hereinafter explained. **FIG. 2** shows the structure of a transmission cycle of data transmitted by the IEEE 1394 network **10**. In IEEE 1394, data is split into packets and time-divisionally transmitted with the length of a cycle 125 μs long as a reference. This cycle is created by a cycle start signal furnished from a node having a cycle master function (one of the equipment shown in **FIG. 1**). An aisochronous packet secures a band necessary for transmission (having time as unit but termed a band) as from the leading ends of all of the cycles. Thus, in aisochronous transmission, data transmission in a pre-set-time is assured. However, if transmission error has occurred, there is no protective scheme, and hence data is lost.

[0049] The node which has acquired a bus as a result of the arbitration sends out an asynchronous packet during the time not used for aisochronous transmission of each cycle. In asynchronous transmission, reliable transmission is assured by employing acknowledge and retry. However, transmission timing is not constant.

[0050] In order for a predetermined node (electronic equipment) to carry out aisochronous transmission, the node must be consistent with the aisochronous function. Also, at least one of the nodes associated with the aisochronous function must have a cycle master function. Moreover, at least one-of the nodes connected o the IEEE 1394 network **10** must have an aisochronous resource-manager function.

[0051] The IEEE 1394 interface is consistent with the CSR (control and status register) architecture having a 64-bit address space prescribed in ISO/IEC 13213; **FIG. 3** illustrates the structure of the address space of the CSR architecture, in which upper; 16 bits are node IDs indicating the node on the IEEE 1394 interface, with the remaining 48 bits being used for specifying the address space accorded to each node. These upper 16 bits are further divided into **10** bus II) bits and physical 6 ID bits (node. ID in the narrow sense of the term). Since all 1 bits are used for a specified objective, it is possible to designate 1023 buses and 63 nodes.

[0052] In the 256 terabyte address space, defined by lower 48 bits, the space defined by the upper 20 bits is split into an initial register space used for a 2048 byte CSR specific register or IEEE 1394 specific register, a private space and an initial memory space. If the space defined by the upper 20 bits is the initial register space, the space defined by the lower 28 bits is used as a configuration ROM (read-only memory), an initial unit space used for a node-specific purpose, or as a plug control register (PCR).

[0053] **FIG. 4** shows an offset address, name and the function of the main CSR. The offset in **FIG. 4** denotes an offset address from the address FFFFF0000000h where the initial register space begins (the number with h at the trailing end denotes a hexadecimal number). The bandwidth available register having an offset 220h indicates a band allocatable to aisochronous communication. Only the value of the node operating as an aisochronous resource manager is retained to be valid. That is, although the CSR of **FIG. 3** is owned by each node, only the bandwidth available register of the aisochronous resource manager is retained to be valid. Stated differently, the bandwidth available register is owned substantially by solely the aisochronous resource manager.

[0054] In the bandwidth available register, a maximum value is stored in case no band is allocated to the aisochronous communication, with the value stored in the bandwidth available register being decremented each time a band is allocated.

[0055] The respective bits of the channel available register with the offset of 224h to 228h are associated with the channel numbers of from, **0** to **63**. If the bit is **0**, it, indicates that the channel has already been allocated. Only the channel available register of the node operating as the aisochronous resource manager is valid.

[0056] Returning to **FIG. 3**, the configuration ROM, which is based on the general ROM format, is arranged in the addresses 200h to 400h in the initial register space. **FIG. 5** illustrates the general ROM format. The node as the accessing unit on the IEEE 1394 is able to have plural units operating independently of one another as the address space is used in the node in common. The unit directories can

designate the version or the position of the software for the unit. Although the positions of the bus_info_block and the root_directory are fixed, the positions of the other blocks are designated by the offset address. In the company ID in the bus_info_block are stored ID numbers denoting the maker of the equipment. In the chip_ID is stored a sole-ID (sole ID in the world) proper to the equipment and not overlapping with other equipment. According to the IEC61883 (International Electrotechnical Commission) standard, 00h, A0h and 2Dh are written in the first, second and third octets, respectively, of the unit spec ID of the unit directory of the equipment which has satisfied the IEC61883. 01h and 1 are written in the first octet and in the least significant bit (LSB) of the third octet of the unit switch version (unit_sw_version), respectively.

[0057] For controlling the equipment input/output through an interface, the node has a plug control register (PCR) prescribed by IEC61883 in the addresses 900h to 9FFh in the initial unit space of **FIG. 3**. This has materialized the concept "plug" in order to logically form a signal path similar to the analog interface. The structure of PCR is: shown in **FIG. 7** in which PCR denotes an output plug. There are provided OPCR (output plug control register) denoting an output plug and iPCR (input plug control register): denoting an input plug. Also, the PCR has an oMPR (output master Plug Register) and an iMPR (input master Plug Register) specifying the information of the input and output plugs proper to each equipment. Although plural pMPRs and iMPRs are not owned by each equipment, it is possible for each equipment to own plural oPCRs and iPCRs, associated with the respective plugs. The PCRs shown in **FIG. 7** each have 31 oPCRs and iPCRs. The flow of the aisochronous data is controlled by operating the registers associated with the respective plugs.

[0058] **FIGS. 8A** to **8**D show the structure of oMPR, oPCR, iMPR and iPCR, respectively. In 2-bit data rate capability (data rate capability) on the MSB sides of the oPCR and iMPR, there is stored the code denoting the maximum transmission speed of the aisochronous data that can be transmitted or received by the equipment. The broadcast channel base of oMPR defines the number of the channel used for the broadcast output.

[0059] In the 5-bit number_of_output_plugs on the LSB-side of dMPR is stored the value denoting the number of the output plugs owned by the equipment, that is the number of oPCRs. In the 5-bit number_of_input_plugs on the LSB side of the iMPR is stored the value of the number of input plugs of the equipment, that is the value denoting the number of the iPCRs. The non-persistent_extension_field and the persistent_extension_field are areas defined for future extension.

[0060] The on line of the MSB of the oPCR and the iPCR denote the plug using state. If the value is 1 or 0, it indicates that the plug is online and offline, respectively. The value of the broadcast connection counter of oPCR and iPCR denote the presence-and non-presence (1 and 0) of the broadcast connection, respectively. The value of the point-to-point connection counter (point-to-point connection counter) of the oPCR and the iPCR, with a length of 6 bits, denote the number of point-to-point connections owned by the plug.

[0061] The value of the channel_number of the oPCR and the iPCR, with a length of 6 bits, denotes the number of the aisochronous channel to which the plug is connected. The value of the data_rate of the oPCR with a 2-bit width length denotes the actual transmission rate of the aisochronous data outputted by the plug. The code stored in the overhead_ID of the oPCR, with a 10-bit length, denotes the maximum number of data contained in the aisochronous packet that can be handled by the plug.

[0062] **FIG. 9** shows the relationship among the plug, plug control register and the aisochronous channel. The AV devices **30-1** to **30-3** are interconnected over an IEEE 1394 serial bus. The aisochronous data, the channel for-which has been specified by the oPCR[**1**], among the OPCR[**0**] to oPCR[**2**], whose transmitting rate and number of oPCRs have been prescribed by the oMPR of the AV device **30-3**, is sent out to the channel #**1** (channel #**1**) of the IEEE 1394 serial bus. The AV device **30-1** reads in the aisochronous data sent out to the input channel #**1** of the IEEE 1394 serial bus by the iPCR[**1**], the input channel #**1** for which has been specified, from the iPCR[**0**] and iPCR[**1**], the transmission rate and the number of iPCRs have been prescribed by the iMPR of the AV device **30-1**. Similarly, the AV device **30-2** sends out the aisochronous data to the channel #**2** specified by the oPCR[**0**], whilst the AV device **30-1** reads in the aisochronous data from the channel #**2** specified by the iPCR[**1**].

[0063] Referring to **FIGS. 10 and 11**, a data recording and/or reproducing medium equipment **20** and the tuner equipment **40**, shown in **FIG. 1**, are now explained.

[0064] Referring to **FIG. 2**, the data recording and/or reproducing medium equipment **20** includes a recording and/or reproduction controller **21** for controlling the data recording and/or reproducing operation for the recording medium, a data detector **22** as detection means for detecting the point of transition of data recorded on the recording medium, an IEEE 1394 interface, abbreviated below to IEEE 1394 I/F **23**, and a control micro-computer **24** for controlling the respective components, adapted for generating discontinuity information data, which will be explained subsequently.

[0065] The recording and/or reproducing controller **21** controls the operation of data recording and/or reproduction for a recording medium, such as a tape or a disc. That is, the recording and/or-reproducing controller **21** receives control signals controlling the operation of the tape as a recording medium, the playback operation, such as normal speed reproduction or variable speed reproduction of data recorded on the recording medium, or the stop operation, such as stop or pause of data reproduction, from the control micro-computer **24**, in order to control the operation of the recording medium.

[0066] The data detector **22** detects transition points of data recorded on the recording medium, such as the boundary of different data or the boundary of analog and digital data, to transmit the results of detection to the control micro-computer **24**.

[0067] The IEEE 1394 I/F **23** includes a link IC **25**, responsible for packetization of data and unpackatization of packeted data, and a physical layer **26** for data exchange between the link IC **25** and an IEEE 1394 serial bus **60** as a bit string of electrical signals.

[0068] The link IC **25** includes a changeover switch **27**, the state of which is changed over depending on whether or

not data reproduced from the recording medium is to be muted, a changeover switch **28**, the state of which is changed over depending on whether or not data is to be recorded or reproduced, and a memory **29** for transiently storing data for recording and/or reproduction to serve as a buffer for inserting discontinuity information table (DIT) for data recorded from the control micro-computer **24**, as later explained. The link IC **25** also includes a packetization unit **30** for packetizing data reproduced from the recording medium to MPEG-TS, an unpacketization unit **31** for unpacketizing the MPEG-TS received from outside and a physical I/F **32** as an interface with the physical layer **26**.

[**0069**] The IEEE 1394 I/F **23** receives the MPEG-TS transmitted from outside over the IEEE 1394 serial bus **60**, while processing the data recorded on the recording medium to form MPEG-TS to route it to the IEEE 1394 serial bus **60** for transmission to outside.

[**0070**] The control micro-computer **24** controls the recording and/or reproducing controller **21**, data detector **22** and the IEEE 1394 I/F **23**. That is, the control micro-computer **24** sends the control signal for controlling the operation of the recording medium to the recording and/or reproducing controller **21**. The control micro-computer **24** also receives the results of detection of the data transition from the data detector **22**. The control micro-computer **24** also controls the changeover switches **27**, **28** responsive to the operating modes, while setting the data transmission, reception or concurrent transmission/reception states to route a control signal for data input/output control for the memory **29**. The control micro-computer **24** also sends a control signal to the memory **29** for erasure of data held in the memory **29** or the DIT to be inserted into the data. The control micro-computer **24** also routes a control signal for controlling the connection responsible for logical connection or disconnection among the equipment to the 1394 packetization unit **30** and the 1394 unpacketization unit **31**.

[**0071**] The data recording and/or reproducing medium equipment **20** receives the MPEG-TS from outside over the IEEE 1394 serial bus **60** to perform the above-described variable processing operations to record the processed data on the recording medium, while reproducing the data recorded on the recording medium to perform variable processing operations thereon to route the resulting MPEG-TS over the IEEE 1394 serial bus **60** to outside.

[**0072**] Referring to **FIG. 11**, the tuner equipment **40** includes an IEEE 1394 I/F **41** for data interfacing with outside, and a multiplexer **42** adapted for separating the multiplexed data received from outside into plural signals, and having the function as detection means for detecting the transition of the time axis of the data. The tuner equipment **40** also includes a decoder **43** for decoding the received data and a tuner unit **44** as tuning means for data tuning for data received through other recording mediums, such as digital broadcasting satellite. The tuner equipment **40** also includes a changeover switch **45** for making selection between a demultiplexer **42** and the tuner unit **44** depending on the operating mode and a control-micro-computer **46** adapted for controlling variable components and having the function as means for generating the DIT as the above-mentioned discontinuity information data (DIT).

[**0073**] The IEEE 1394 I/F **41** also includes a physical layer **47** for data exchange between a link IC **48** and an IEEE 1394 serial bus **60** as bit strings of electrical signals and the link IC **48** for performing the processing of data packetizing and unpacketizing the packeted data.

[**0074**] The link IC **48** includes a physical I/F **49**, as an interface with the physical layer **47**, an IEEE 1394-packetization unit **50** for packetizing the data recorded by the tuner unit **44** to the MPEG-TS, and a 1394 unpacketization unit **51** for unpacketizing the MPEG-TS received from outside over the IEEE-1394 serial bus **60**. The IEEE 1394 I/F **41** also includes a memory **52** for storing the received data and for operating as a buffer for inserting the DIT received from the control micro-computer **46** into data, a changeover switch **53**, the state of which is changed over depending on whether the data received over the IEEE 1394 serial bus **60** is to be decoded or the data received by the tuner unit **44** is to be outputted to a monitor or a speaker, not-shown, a VTR handling analog data, not shown, or to outside, and a changeover switch **54**, the state of which is changed over depending on whether the data received over the IEEE 1394 serial bus **60** or the data received by the tuner unit **44** is to be muted.

[**0075**] The IEEE 1394 I/F **41** receives the MPEG-TS transmitted from outside over the IEEE 1394 serial bus **60**, while processing the data received by the tuner unit **44** to route it over the IEEE 1394 serial bus **60** for transmission to outside.

[**0076**] The demultiplexer **42** separates the multiplexed data received from outside into plural signals. The demultiplexer **42** detects data transition, such as the boundary of different data obtained on separation and the boundary of analog and digital data, to transmit the detected result to the control micro-computer **46**.

[**0077**] The decoder **43** decodes the data separated by the demultiplexer **42**.

[**0078**] The tuner unit **44** receives data through other recording mediums, such as broadcasting-satellite, while performing tuning control under control by the control micro-computer **46**.

[**0079**] The changeover switch **45** switches between the demultiplexer **42** and the tuner unit **44**, under control by the control micro-computer **46**, to change over the data route. That is, the changeover switch **45** connects to the demultiplexer **42** if the data received over the IEEE 1394 serial bus **60** is to be decoded. The changeover switch **45** connects to the tuner unit **44** if the data received by the tuner unit **44** is to be outputted to a monitor, a speaker, a VTR or to outside.

[**0080**] The control micro-computer **46** controls the IEEE 1394 I/F **41**, demultiplexer **42**, decoder **43** and the tuner unit **44**. That is, the control micro-computer **46** transmits control signal for connection control supervising logical connection and disconnection among the equipments to the 1394 packetizing unit **50** and to the 1394 unpacketizing unit **51** in accordance with the connection management consistent with the IEC 1883. Also, the control micro-computer **46** transmits control signals for erasing data held by the memory **52** and DIT for insertion into data to the memory **52**. The control micro-computer **46** also transmits control signals for changing the operating mode depending on whether the data received over the IEEE 1394 serial bus **60** or data received by the tuner unit **44** is to be outputted to the monitor, speaker, VTR or to outside, while transmitting control

signals to the changeover switch **54** for controlling whether or not these data is to be muted. In addition, the control micro-computer **46** receives the result of data transition detection from the demultiplexer **42**, while transmitting tuning control signal to the tuner unit **44**.

[**0081**] The tuner equipment **40** receives the MPEG-TS from outside over the IEEE 1394 serial bus **60** to perform variable processing operations thereon, while performing variable processing operations on data received by the tuner unit **44** to output the resulting MPEG-TS to the monitor, speaker, VTR or to outside.

[**0082**] In the IEEE 1394 network **10**, the control micro-computers **24**, **46** of the data recording and/or reproducing medium equipment **20** and the tuner equipment **40** send the DIT to the respective-memories **29**, **52** to insert the DIT into the data in case the time axis or the services of the contents have been changed. This DIT is a sort of the service information prescribed in the digital video broadcasting (DBS) system which is the European digital broadcasting system. This DIT has a one-bit flag transition_flag, abbreviated to tf, as the syntax.

[**0083**] This tf indicates the sort of the status transition in the MPEG-TS. If tf is 1, it indicates that status transition has occurred due to changes in the source data in the MPEG-TS. These changes in the source data can be changes in the MPEG-TS itself, while it can be changes in the position in the MPEG-TS as in the case of time shift. That is, tf equal to **1** indicates that the source data is discontinuous. If tf is 0, it indicates that the status transition has been produced due to changes in only the selection, that is that the data stays at the same position in the same TS and is continuous.

[**0084**] The method for DIT insertion into data is hereinafter explained according to different cases in which the DIT should be introduced.

[**0085**] First, the DIT should be inserted into data for transmission when the DIT recorded on the recording medium is being reproduced, specifically, when the DIT accompanying the discontinuous MPEG-TS recorded on the recording medium of the data recording and/or reproducing medium equipment **20** is being reproduced.

[**0086**] In such case, the tuner equipment **40** inserts the DIT, when changing over the channel, to the data received from the data recording and/or reproducing medium. equipment **20** over the IEEE 1394 serial bus **60** and unpacketized.

[**0087**] The DIT should be inserted into data and transmitted when starting data outputting, specifically, when the data recording and/or reproducing medium equipment **20** causes operating mode transition from the stop state to the playback (PB) state to start outputting of data recorded on the recording medium.

[**0088**] In such cases, the operating mode in the data recording and/or reproducing medium equipment **20**, the data input/output mode, abbreviated below to DIF mode, in the connection management portion of the data recording and/or reproducing medium equipment **20**, control signals for muting control sent from the control micro-computer **24** of the data recording and/or reproducing medium equipment **20** to the switch **27**, and time changes in the MPEG-TS packet, are shown in the timing chart shown in **FIG. 12**. That is, if the DIF mode is changed from the input ON) to the output (OUT), the data recording and/or reproducing medium equipment **20** sets a broadcast connection counter, abbreviated below to Bcc, or the point-to-point connection counter, abbreviated below to Pcc, in the oPCR of the own output plug, as the logical data-entrance/exit, from 0 to 1 to set the connection state. The data recording and/or reproducing medium equipment **20** inserts one DIT tf=1 before releasing the muting. In the drawing, Empty means an empty packet.

[**0089**] The above cases in which the DIT should be introduced include such a case when the data starts to be outputted in the connected state, specifically, such a case in which the data recording and/or reproducing medium equipment **20** changes the operating mode from the stop state to the playback state during dubbing to start outputting the data recorded on the recording medium.

[**0090**] In such case, the data recording and/or reproducing medium equipment **20** inserts a DIT tf=1 before-releasing the muting.

[**0091**] The sequence of operations in the data recording and/or reproducing medium equipment **20** is as shown in **FIG. 13**. That is, the data recording and/or reproducing medium equipment **20** at step S**1** sends a control signal from the control micro-computer **24** to the switch **27**, in order to set the muting on state to prevent data from being inputted to the IEEE 1394 I/F **23**. The data recording and/or reproducing medium equipment **20** also sends a control signal to the memory in the IEEE 1394 I/F **23** to clear data held in the memory **29**.

[**0092**] The data-recording and/or reproducing medium equipment **20** then deciphers at step S**2** whether the operating mode is pause, playback pause (PB pause), fast feed (cue), fast rewind (review) or variable speed playback state, such as slow reproduction (slow).

[**0093**] If the operating state is the pause or variable speed playback, the data recording and/or reproducing medium equipment **20** checks at step S**5** whether the Bcc or Pcc at oPCR is not less than 1, that is whether or not the connected state persists.

[**0094**] If Bcc and Pcc in oPCR are both 0, the data recording and/or reproducing medium equipment **20** proceeds to step S**7**.

[**0095**] If Bcc or Pcc in oPCR is not less than 1, the data recording and/or reproducing medium equipment **20** proceeds to the processing at step S**6**.

[**0096**] If the data recording and/or reproducing medium equipment **20** at step S**2** has verified that the pause or variable speed playback does not persist, it checks at step S**3** whether or not Bcc and Pcc in OPCR are both 0.

[**0097**] If Bcc or Pcc in oPCR is not less than 1, the data recording and/or reproducing medium equipment **20** proceeds to the processing at step S**6**.

[**0098**] If Bcc and Pcc in oPCR are both 0, the data recording and/or reproducing medium equipment **20** at step S**4** increments Bcc or Pcc in oPCR by 1.

[**0099**] The data recording and/or reproducing medium equipment **20** at step S**6** sends the DIT tf=1 from the control micro-computer **24** to the memory **29** to insert this DIT to the data.

[0100] After transfer to the playback state at step S7, the data recording and/or reproducing medium equipment **20** sends at step S8 a control signal from the control micro-computer **24** to the switch **27** to turn off the muting to permit data to be inputted to the IEEE 1394 I/F **23**. The data recording and/or reproducing: medium equipment **20** then terminates the sequence-of operations.

[0101] Meanwhile, if, in the data recording and/or reproducing medium equipment **20**, the DIF mode is for outputting and the own oPCR is set by remote control to Bcc=0 or to Pcc=0, then DIT is not inserted.

[0102] By this sequence of operations, the data recording and/or reproducing medium equipment **20** inserts the DIT into the data recording and/or reproducing medium equipment **20** at the aforementioned timing. The data recording and/or reproducing medium equipment **20** unpacketizes the data, having the DIT introduced therein, in the 1394 packetizing unit **30**, and outputs the packeted data as MPEG-TS to outside over the IEEE 1394 serial bus **60**.

[0103] On the other hand, the tuner equipment **40** receives the MPEG-TS sent from the data recording and/or reproducing medium equipment **20** to perform a sequence of operations shown in **FIG. 14** to reproduce and output data.

[0104] That is, the tuner equipment **40** issues at step S11 a command to set the input and output stages of the decoder **43** and the digital to analog (D/A) converter to the muting on state to pause the output processing of unusual images or sound as well as a command to set the input and output stages of the demultiplexer **42** to the muting on state to prevent the inputting of unusual streams.

[0105] The tuner equipment **40** at step S12 transmits a control signal from the control micro-computer **46** to the memory **52** in the IEEE 1394 I/F **41** to clear the data held by the memory **52**. If there is any memory, not shown, used in various portions in the tuner equipment **40** for data working, such memory also is cleared.

[0106] The tuner equipment **40** at step S13 sets data required at the time of initialization or reversion from the paused state of the variable portions or units as necessary.

[0107] The tuner equipment **40** at step S14 commands the control micro-computer **46** to set the input stages of the demultiplexer **42** to the muting off state and, after detecting the synchronization byte of an input stream unpacketized by the unpacketizing unit **51**, confirms that the stream is being inputted in stability.

[0108] The tuner equipment **40** at step S15 commands the control micro-computer **46** to set the output stages of the demultiplexer **42** and the decoder **43** to the muting off state to confirm that the input stream to the decoder **43** has been decoded in stability.

[0109] The tuner equipment **40** at step S16 issues a command to set an output stage of the decoder **43** and the input and output stages of the D/A converter to the muting off state to re-output data to the electronic equipment, such as a monitor, a speaker or a VTR, connected thereto, to re-initiate reproduction of normal picture or sound.

[0110] By so doing, the tuner equipment **40** is able to decode the data appropriately under control by the control micro-computer **46**, such that there is no risk of hang-up of e.g., the demultiplexer **42** or the decoder **43**, nor the risk of displaying a noisy picture or outputting unusual sound which might destruct the speaker.

[0111] The above cases in which the DIT should be introduced include such a case when the data outputting is to be halted, as when the operating state of the data recording and/or reproducing medium equipment **20** is changed from the playback state to the halted state.

[0112] In such case, the operating mode in the data recording and/or reproducing medium equipment **20**, the DIF mode in the data recording and/or reproducing medium equipment **20**, the control signal sent from the control micro-computer **24** of the data recording and/or reproducing medium equipment **20** to the switch **27**, and time-changes of the MPEG-TS packet, are shown by the timing chart shown in **FIG. 15**. That is, if the DIF mode is changed from the output to the input, the data recording and/or reproducing medium equipment **20** inserts a DIT of tf=1 after setting the muting and before setting Bcc>0 or Pcc>0 in the own oPCR to 0.

[0113] The above cases in which the DIT should be introduced include such a case when the data outputting is halted in the connected state, specifically, such a case in which the data recording and/or reproducing medium equipment **20** changes its operating mode from the playback state to the operating mode in the course of dubbing.

[0114] In such case, the data recording and/or reproducing medium equipment **20** inserts a DIT tf=1.

[0115] The sequence of operations in the data recording and/or reproducing medium equipment **20** is as shown in **FIG. 16**. That is, the data recording and/or reproducing medium equipment **20** at step S21 sends a control signal from the control micro-computer **24** to the switch **27** to set the muting on state to prevent data from being inputted to the IEEE 1394 I/F **23**. The data recording and/or reproducing medium equipment **20** also sends a control signal from the control micro-computer **24** to the memory **29** in the IEEE 1394 I/F **23** to clear the data held in the memory **29**.

[0116] The data recording and/or reproducing medium equipment **20** then deciphers at step S22 whether or not the operating mode is the playback state. If the operating mode is not the playback state, the data recording and/or reproducing medium equipment **20** verifies at step S26 whether or not the Bcc or Pcc in oPCR is not less than 1, that is whether or not the operating state is the connected state.

[0117] If the Bcc and Pcc in oPCR are both 0, the data recording and/or reproducing medium equipment **20** transfers to the processing of step S28.

[0118] If the Bcc or Pcc in oPCR is not less than 1, the data recording and/or reproducing medium equipment **20** at step S27 decrements Bcc or Pcc in OPCR by 1.

[0119] If the data recording and/or reproducing medium equipment **20** has verified at step S22 that the operating state is the playback state, it deciphers at step S23 whether or not the Bcc or the Pcc in oPCR are not less than 1.

[0120] If the Bcc and Pcc in oPCR are both 0, the data recording and/or reproducing medium equipment **20** transfers to the processing of step S28.

[0121] If the Bcc or Pcc in oPCR is not less than 1, the data recording and/or reproducing medium equipment **20** at step S**24** sends a DIT tf=1 from the control micro-computer **24** to the memory **29** to insert the DIT into data.

[0122] The data recording and/or reproducing medium equipment **20** at step S**25** decrements the Bcc or Pcc in oPCR by 1.

[0123] The data recording and/or reproducing medium equipment **20** at step S**28** transfers to the stop state, after which it sends a control signal at step S**29** from the control micro-computer **24** to the switch **27** to turn the muting off to permit data to be inputted to the IEEE 1394 I/F **23** to terminate the sequence of operations.

[0124] Meanwhile, the data recording and/or reproducing medium equipment **20** is able to apply this processing to the case of transitions of the operating state from the playback state to the fast feed or fast rewind state.

[0125] It is by the above-described sequence of operations that the data recording and/or reproducing medium equipment **20** introduces the DIT at the aforementioned timing. The data recording and/or reproducing medium equipment **20** packetizes the data, having introduced therein the DIT indicating that the data being reproduced has been halted, in the packetizing unit **30**, and outputs the packetized data as MPEG-TS to outside over the IEEE 1394 serial bus **60**.

[0126] The tuner equipment **40**, which has received the MPEG-TS, performs the sequence of operations, shown in **FIG. 14**, to reproduce data. By so doing, the tuner equipment **40** is able to decode data appropriately under control by the control micro-computer **46**, without the risk of hang-up of each component, such as the demultiplexer **42** or the decoder **43**, even on abrupt transition from the playback state to the halt state. Thus, it is possible to prevent display of a noisy picture or outputting of an unusual sound which might destruct a speaker.

[0127] The data output seizure based on a connection rule consistent with the IEC 61883, for which the DIT should be inserted into data-for transmission, is explained. It is assumed here that the data recording and/or reproducing medium equipment **20** seizes a default channel used by the tuner equipment **40** and outputs on the seized channel.

[0128] In such case, the operating mode in the data recording and/or reproducing medium equipment **20**, and time changes in the DIF mode in the data recording and/or reproducing medium equipment **20**, Bcc in oPCR of the tuner equipment **40** and in the MPEG-TS packet, are shown as in the timing chart of **FIG. 17**. That is, the data recording and/or reproducing medium equipment **20** sets Bcc of oPCR of the tuner equipment **40** from 1 to 0, while setting Bcc or Pcc in the own oPCR from 0 to 1. Before releasing the muting, the data recording and/or reproducing medium equipment **20** inserts a sole DIT tf=1.

[0129] The sequence of operations in the data recording and/or reproducing medium equipment **20** is as shown in **FIG. 18**. That is, the data recording and/or reproducing medium equipment **20** at step S**31** turns on the muting, to prevent data from being inputted from the control micro-computer **24** to the switch **27**, at the same time as it transmits a control signal from the control micro-computer **24** to the memory **29** in the IEEE 1394 I/F **23** to clear the data held in the memory **29**.

[0130] The data recording and/or reproducing medium equipment **20** then sets at step S**32** the operation state to, the playback and outputting state.

[0131] The data recording and/or reproducing medium equipment **20** at step S**34** sets Bcc or Pcc of the own-oPCR from 0 to 1.

[0132] The data recording and/or reproducing medium equipment **20** at step S**35** sends a DIT tf=1 from the control micro-computer **24** to the memory **29** to insert this DIT into data.

[0133] The data recording and/or reproducing medium equipment **20** at step S**36** transmits a control signal from the control micro-computer **24** to the switch **27** to turn off the muting to permit data to be inputted to the IEEE 1394 I/F **23** to terminate a sequence of operations.

[0134] By the above-described sequence of operations, the data recording and/or reproducing medium equipment **20** inserts two DITs data at the aforementioned timing to packetize the data to output the resulting data to outside as MPEG-TS over the IEEE 1394 serial bus **60**.

[0135] On reception of the MPEG-TS, the tuner equipment **40** performs the sequence of operations shown in **FIG. 14** to reproduce the data. By so doing, the tuner equipment **40** is able to decode the data appropriately under control by the control micro-computer **46**, so that there is now no risk of hang-up of each component, such as the demultiplexer **42** or the decoder **43**, even on abrupt transition from the playback state to the halt state. Thus, it is possible to prevent display of a noisy picture or outputting of an unusual sound which might destruct a speaker.

[0136] Such a case is now explained in which the MPEG-TS outputted by the data recording and/or reproducing medium equipment **20** cannot cope with variable speed playback, in which case it is necessary to insert DIT into data for transmission, as explained previously.

[0137] In such case, the data recording and/or reproducing medium equipment **20** inserts the DIT when the mechanical mode transfers to the variable speed-playback state, and sets the muting to output an empty packet during variable speed playback. Specifically, the data recording and/or reproducing medium equipment **20** inserts a DIT data of tf=1 when transferring from the usual playback state to the playback pause, fast feed, fast rewind or slow playback. The data recording and/or reproducing medium equipment **20** also inserts a DIT data of tf=1 when transferring from the playback pause, fast feed, fast rewind or slow playback to the usual playback state. However, it is unnecessary for the data recording and/or reproducing medium equipment **20** to insert the DIT in transferring from the playback pause, fast feed, fast rewind or slow playback to the stop state.

[0138] The sequence of operations in the data recording and/or reproducing medium equipment **20** is as shown in **FIG. 19**. That is, the data recording and/or reproducing medium equipment **20** at step S**41** transmits a control signal from the control micro-computer **24** to the switch **27** to turn on the muting to prevent data from being inputted to the IEEE 1394 I/F **23**, while transmitting a control signal from the control micro-computer **24** to the memory **29** in the IEEE 1394 I/F **23** to clear the data held in the memory **29**.

[0139] The data recording and/or reproducing medium equipment **20** the deciphers at step S**42** whether or not the operating state is the playback state.

[0140] If the operating state is the playback state, the data recording and/or reproducing medium equipment **20** at step S**46** deciphers whether or not Bcc or Pcc in oPCR is not less than 1, that is whether or not the connection state persists. If Bcc and Pcc in oPCR are 0, the data recording and/or reproducing medium equipment **20** transfers to the processing at step S**48**.

[0141] If Bcc or Pcc in oPCR is not less than 1, the data recording and/or reproducing medium equipment **20** at step S**47** sends a DIT tf=1 from the control micro-computer **24** to the memory **29** to insert this DIT into data, before proceeding to the processing of step S**48**.

[0142] If the data recording and/or reproducing medium equipment **20** at step S**42** deciphers that the operating state is not the playback state but is a paused state, it transfers to step S**43** to decipher whether or not Bcc or Pcc in oPCR is not less than 1.

[0143] If both Bcc and Pcc in oPCR are both 0, the data recording and/or reproducing medium equipment **20** proceeds to the processing at step S**48**.

[0144] If Bcc or Pcc in oPCR is not less than 1, the data recording and/or reproducing medium equipment **20** at step S**44** sends a DIT tf=1from the control-micro computer **24** to the memory **29** to insert this DIT into data.

[0145] The data recording and/or reproducing medium equipment **20** at step S**48** transfers to the variable speed playback to transmit a control signal at step S**49** from the control micro-computer **24** to the switch **27** to turn off the muting to permit data to be inputted to the IEEE 1394 I/F **23** to terminate the sequence of operations.

[0146] Meanwhile, the data recording and/or reproducing medium equipment **20** is able to apply this processing to the case of transition of the operating mode to the paused state.

[0147] By this sequence of operations, the data recording and/or reproducing medium equipment **20** inserts the DIT at the aforementioned timing. The data recording and/or reproducing medium equipment **20** packetizes the data, having the DIT introduced therein, in the 1394 packetizing unit **30**, to output the packetized data to outside as MPEG-TS over the IEEE 1394 serial bus **60**.

[0148] On reception of the MPEG-TS, the tuner equipment **40** performs the sequence of operations shown in **FIG. 6** to reproduce data. By so doing, the tuner equipment **40** is able to decode data appropriately under control by the control micro-computer **46**, without the risk of hang-up of each component, such as the demultiplexer **42** or the decoder **43**, even on abrupt transition from the playback state to the halt-state, such that it is possible to prevent display of a noisy picture or outputting of an unusual sound which might destruct a speaker.

[0149] As a case in which it is necessary to insert DIT into-data for transmission, such a case is now explained, in which there is a transition of changes in contents thus requiring DIT insertion into data for transmission. This is such a case in which digital contents of a program A and a program B, different from each other, such as junction of the MPEG contents or overwrite recording of the MPEG contents, are recorded in succession on a recording medium of the data recording and/or reproducing medium equipment **20**.

[0150] In such case, time changes in the MPEG contents and MPEG-TS packets recorded on the recording medium of the data recording and/or reproducing medium equipment **20** and control signals for muting control sent from the control micro-computer **24** of the data recording and/or reproducing medium equipment **20** to the switch **27**, are shown in a timing chart of **FIG. 20**. That is, the data recording and/or reproducing medium equipment **20** inserts a DIT of tf=1 in transition from the program A to the program B.

[0151] The data recording and/or reproducing medium equipment **20** similarly inserts the DIT when the transition in the MPEG contents in the recording medium is on the boundary between the contents and an unrecorded portion or on the boundary between the digital and analog contents when both the digital and analog contents are recordable as in D-VHS, the recording portions of these contents existing together.

[0152] In this case, time changes in the MPEG contents and the MPEG-TS packets recorded on the recording medium of the data recording and/or reproducing medium equipment **20** and control signals for muting control sent from the control micro-computer **24** of the data recording and/or reproducing medium equipment **20** to the switch **27** are indicated by the timing chart shown in **FIG. 21**. That is, when the data recording and/or reproducing medium equipment **20** reproduces the recording medium from the portion thereof having the digital contents recorded thereon to the portion thereof having the analog contents recorded thereon, it inserts a sole DIT.

[0153] The sequence of operations in the data recording and/or reproducing medium-equipment **20** is as shown in **FIG. 22**. That is, the data recording and/or reproducing medium equipment **20** at step S**51** sends a control signal from the control micro-computer **24** to the switch **27** to turn the muting on to prevent data from being inputted to the IEEE 1394 I/F **23**, while transmitting a control signal from the control micro-computer **24** to the memory **29** in the IEEE 1394 I/F **23** to clear the data held in the memory **29**.

[0154] The data recording and/or reproducing medium equipment **20** at step S**52** checks whether or not there is a transition point in the digital contents.

[0155] If there is a transition point in the digital contents, the data recording and/or reproducing medium equipment **20** at step S**56** transmits a DIT of tf=1 from the control micro-computer **24** to the memory **29** to insert the DIT into the data The data recording and/or reproducing medium equipment **20** then shifts to the processing of step S**57**.

[0156] If there is no transition in the digital contents, the data recording and/or reproducing medium equipment **20** checks whether or not recording is made on the recording medium from the digital contents to an unrecorded-portion or analog contents continuously.

[0157] If recording is made on the recording medium from the digital contents to an unrecorded portion or analog contents continuously, the data recording and/or reproducing medium equipment **20** at step S**55** transmits a DIT of tf=1

from the control-micro-computer **24** to the memory **29** to insert this DIT into data. The data recording and/or reproducing medium equipment **20** then transfers to the processing of step S**57**.

[**0158**] If recording is made from an unrecorded portion or the analog contents to the digital contents, the data recording and/or reproducing medium equipment **20** at step S**54** transmits a DIT if tf=1 from the control micro-computer **24** to the memory **29** to insert this DIT into the data.

[**0159**] The data recording and/or reproducing medium equipment **20** at step S**57** sends a control signal from the control micro-computer **24** to the switch **27** to set the muting off state to permit data to be inputted to the IEEE 1394 I/F **23**. The data recording and/or reproducing medium equipment **20** then terminates the sequence of operations.

[**0160**] By this sequence of operations, the data recording and/or reproducing medium equipment **20** inserts the DIT into data at the aforementioned timing, responsive to the transition point of the MPEG contents, and packetizes the data in the 1394 packetizing unit **30** to output the packetized data as MPEG-TS to outside over the IEEE 1394 serial bus **60**.

[**0161**] On reception of the MPEG-TS, the tuner equipment **40** performs the above-described sequence of operations, shown in **FIG. 6**, to reproduce data. By so doing, the tuner equipment **40** is able to decode data appropriately under control by the control micro-computer **46**, without the risk of hang-up of each component, such as the demultiplexer **42** or the decoder **43**, even on abrupt transition from the playback state to the halt state, such that it is possible to prevent display of a noisy picture or outputting of an unusual sound which might destruct a speaker.

[**0162**] The cases of data recording starting and data recording stop, in which it is necessary to insert the DIT into data to transmit the resulting data, are hereinafter explained. Examples of these cases include a case wherein the data recording and/or reproducing medium equipment **20** changes its operating mode from the stop mode to the recording state or from the recording state to the operating mode.

[**0163**] If, in these cases, data is to be recorded on the recording medium, a DIT of tf=1 is first inserted before proceeding to data recording. If the data recording and/or reproducing medium equipment **20** stops or pauses the data recording on the recording medium, it records a DIT of tf=1 at the trailing end of the recorded data before proceeding to the stop state or paused state.

[**0164**] By performing this sequence of operations, the data recording and/or reproducing medium equipment **20** inserts the DIT at the aforementioned timing. When reproducing these data, the data recording and/or reproducing medium equipment **20** packetizes the data in the 1394 packetizing unit **30** to output the resulting data as MPEG-TS to outside over the IEEE 1394 serial bus **60**.

[**0165**] On reception of the MPEG-TS, the tuner equipment **40** performs the above-described sequence of operations, shown in **FIG. 6**, to reproduce data. By so doing, the tuner equipment **40** is able to decode data appropriately under control by the control micro-computer **46**, without the risk of hang-up of each component, such as the demultiplexer **42** or the decoder **43**, even on abrupt transition from the playback state to the halt state, such that it is possible to prevent display of a noisy picture or outputting of an unusual sound which might destruct a speaker.

[**0166**] Thus, the data recording and/or reproducing medium equipment **20** inserts the DIT into data responsive to changes in the operating mode or in the contents. This processing can, of course, be applied to the tuner equipment **40**.

[**0167**] The tuner equipment **40** also inserts the DIT into data when changing the services received by the tuner unit **44** over the satellite or cable to different services of a selected station to output the service stream over the IEEE 1394 serial bus **60**.

[**0168**] That is, the tuner equipment **40** is responsive to changes in the services received by the tuner unit **44** to transmit the DIT from the control micro-computer **46** to the memory **52** to insert the transmitted DIT into the data. The tuner equipment **40** inserts the data, into which has been introduced the DIT, by the 1394 packetizing unit **50**, to output the packetized data as MPEG-TS over the IEEE 1394 serial bus **60**.

[**0169**] By so doing, the data recording and/or reproducing medium equipment **20**, receiving this MPEG-TS, is able to record stable data on the recording medium under control by the control micro-computer **24**

[**0170**] With the IEEE 1394 network **10**, embodying the present invention, as described above, it is possible to evade hang-up of an electronic equipment receiving the data by inserting the DIT into data. Thus, an undesirable picture, such as a noisy picture, or an unusual sound, which might destruct the speaker, may be eliminated.

[**0171**] By applying the present invention, it is possible to set a guideline in managing the DIT such as a timing of introducing the DIT.

[**0172**] The present invention is not limited to the above-described embodiment and may be applied not only to the IEEE 1394 network but to a network constructed by a digital serial bus such as so-called Ethernet or universal serial-bus (USB).

[**0173**] The present invention is applicable not only to the data recording and/or reproducing medium equipment **20** or tuner equipment **40** but to a household electronic equipment having a function of communication with outside or to an electronic equipment capable of transmission/reception of MPEG-TS, such as a computer.

[**0174**] The present invention is also applicable to a MPEG-pure embodiment adapted to process received DIT. In other respects, the present invention can similarly be modified without altering its technical concept.

1. A method for transmitting data comprising:

a detection step of detecting the timing of inserting discontinuity information data into contents of digital audio/visual data to be recorded and/or reproduced for a recording medium on a data receiving apparatus, said discontinuity information data indicating the discontinuity of said contents; and

a step of inserting said discontinuity information data into said data digital audio/video data on detection of the timing of inserting the discontinuity information data in said detection step,

wherein said discontinuity information data contains at least an indication of a status change of content and position within a source data, and

wherein said detection step detects the timing of inserting discontinuity information data in accordance with a chance in an operation mode, a timing change a content change or a transition point in digital contents.

2. The data transmitting method according to claim 1 wherein said detection step detects a transition point on the time axis of the contents of the digital audio/video data recorded on said recording medium as said timing.

3. The data transmitting method according to claim 1 wherein said detection step detects the outputting start time of the digital audio/video data recorded on said recording medium as said timing.

4. The data transmitting method according to claim 1 wherein said detection step detects the outputting end time of the digital audio/video data recorded on said recording medium as said timing.

5. The data transmitting method according to claim 1 wherein said detection step detects the time of seizing a channel on said network being used by another electronic equipment on said network and outputting data recorded on said recording medium as said timing.

6. The data transmitting method according to claim 1 wherein said detection step detects the time of transition of digital audio/video data recorded on said recording medium to variable speed playback as said timing.

7. The data transmitting method according to claim 1 wherein said detection step detects the time of contents switching of digital audio/video data recorded on said recording medium as said timing.

8. The data transmitting method according to claim 1 wherein said detection step detects the time of start of recording of digital audio/video data on said recording medium as said timing.

9. The data transmitting method according to claim 1 wherein said detection step detects the time of end of recording of digital audio/video data on said recording medium as said timing.

10. The data transmitting method according to claim 1 wherein said recording medium is a tape-shaped recording medium.

11. The data transmitting method according to claim 1 wherein said recording medium is a disc-shaped recording medium.

12. A method for transmitting data, comprising:

a detection step of detecting the timing of inserting discontinuity information data into contents of digital audio/video data received through a communication medium, said discontinuity information data indicating the discontinuity of said contents; and

a step of inserting said discontinuity information data into said digital audio/visual data on detection of the timing of inserting the discontinuity information data in said detection step,

wherein said discontinuity information data contains at least an indication of a status chance of content and position within a data source, and

wherein said detecting detects the timing of inserting discontinuity information data in accordance with a chance in an operation mode, a timing change, a content change or a transition point in digital contents.

13. The data transmitting method according to claim 12 wherein said detection step detects a transition point of contents of digital audio/video data, which has been inserted said discontinuity information data as said timing.

14. The data transmitting method according to claim 12 wherein said detection step detects the time of switching on station selection from a program received over a communication medium to a different program.

15. A data transmitting apparatus comprising:

an interface unit configured to connect to a network;

a data transmission unit configured to transmit digital audio/visual data to a data receiving apparatus through said network:

a discontinuity information generating unit configured to generate discontinuity information data indicating discontinuity of said digital audio/visual data;

a timing detection unit configured to detect the timing of inserting the discontinuity information data into contents of the digital audio/visual data on said data transmitting apparatus to be recorded and/or reproduced for a recording medium on said data receiving apparatus on said network; and

a discontinuity information inserting unit configured to insert said discontinuity information data into said digital audio/visual data on detection of the timing of inserting the discontinuity information data by said timing detection unit,

wherein said discontinuity information data contains at least an indication of a status chance of content and a position within a source data, and

wherein said timing detection unit detects the timing of inserting discontinuity information data in accordance with a chance in an operation mode, a timing change, a content change, or a transition point in digital contents.

16. The electronic equipment according to claim 15 wherein said detection means detects a transition point on the time axis of the contents of the digital audio/video data recorded on said recording medium as said timing.

17. The electronic equipment according to claim 15 wherein said detection means detects the outputting start time of the digital audio/video data recorded on said recording medium as said timing.

18. The electronic equipment according to claim 15 wherein said detection means detects the outputting end time of the digital audio/video data recorded on said recording medium as said timing.

19. The electronic equipment according to claim 15 wherein said detection means detects the time of seizing a channel on said network being used by another electronic equipment on said network and outputting data recorded on said recording medium as said timing.

20. The electronic equipment according to claim 15 wherein said detection means detects the time of transition of digital audio/video data recorded on said recording medium to variable speed playback as said timing.

21. The electronic equipment according to claim 15 wherein said detection means detects the time of contents switching of digital audio/video data recorded on said recording medium as said timing.

22. The electronic equipment according to claim 15 wherein said detection means detects the time of start of recording of digital audio/video data on said recording medium as said timing.

23. The electronic equipment according to claim 15 wherein said detection means detects the time of end of recording of digital audio/video data on said recording medium as said timing.

24. The electronic equipment according to claim 15 wherein said recording medium is a tape-shaped recording medium.

25. The data transmitting method according to claim 15 wherein said recording medium is a disc-shaped recording medium.

26. A data transmitting apparatus, comprising:

tuning means for tuning digital audio/video data received from outside over a communication medium; and

generating means for generating discontinuity information data of digital audio/video data received through said tuning means;

said generating means inserting the generated discontinuity information data into contents of digital audio/video data received through said tuning means,

wherein said discontinuity information data contains at least an indication of a status change of content and position within a source data, and

wherein said generating means generates discontinuity information data to be inserted when a chance in an operation mode, a timing change a content change, or a transition point in digital contents is detected.

27. The electronic equipment according to claim 26 further comprising:

detection means for detecting the point of transition of contents of digital audio/video data having inserted therein said discontinuity information data.

28. The electronic equipment according to claim 26 wherein said generating means inserts said discontinuity information data when switching from a program being received from outside through said tuning means to a different program on station selection.

* * * * *