E. O'TOOLE.

SLABBING AND LOADING MACHINE.

APPLICATION FILED DEC. 28, 1917.

1,336,440.

Patented Apr. 13, 1920.

2 SHEETS—SHEET 1.

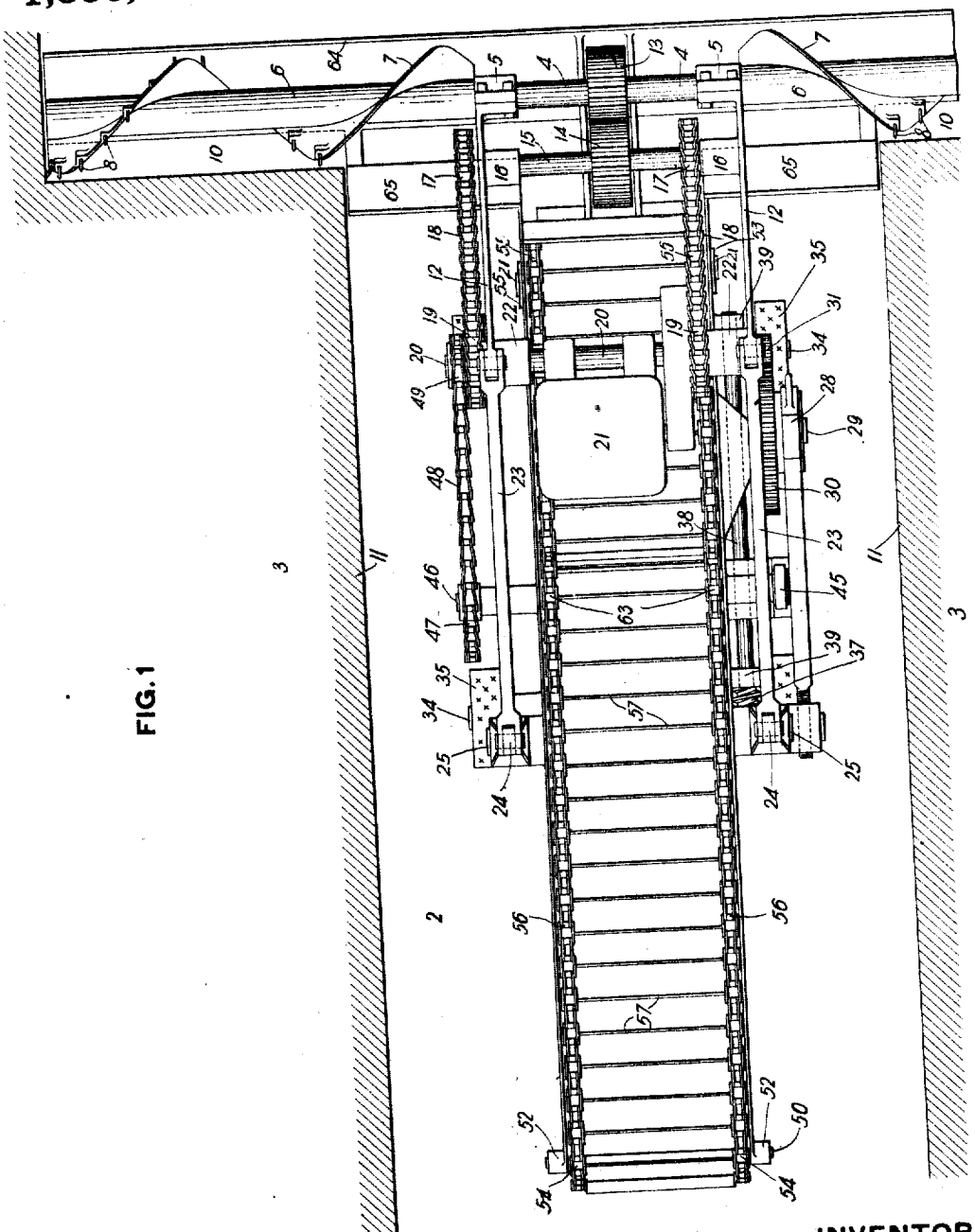

FIG. 1

WITNESSES

Chas. Loxterman

R. D. Little

INVENTOR

Edward O'Toole

by D. A. Usina

his Attorneys

E. O'TOOLE.

SLABBING AND LOADING MACHINE.

APPLICATION FILED DEC. 28, 1917.

1,336,440.

Patented Apr. 13, 1920.

2 SHEETS—SHEET 2.

FIG. 2

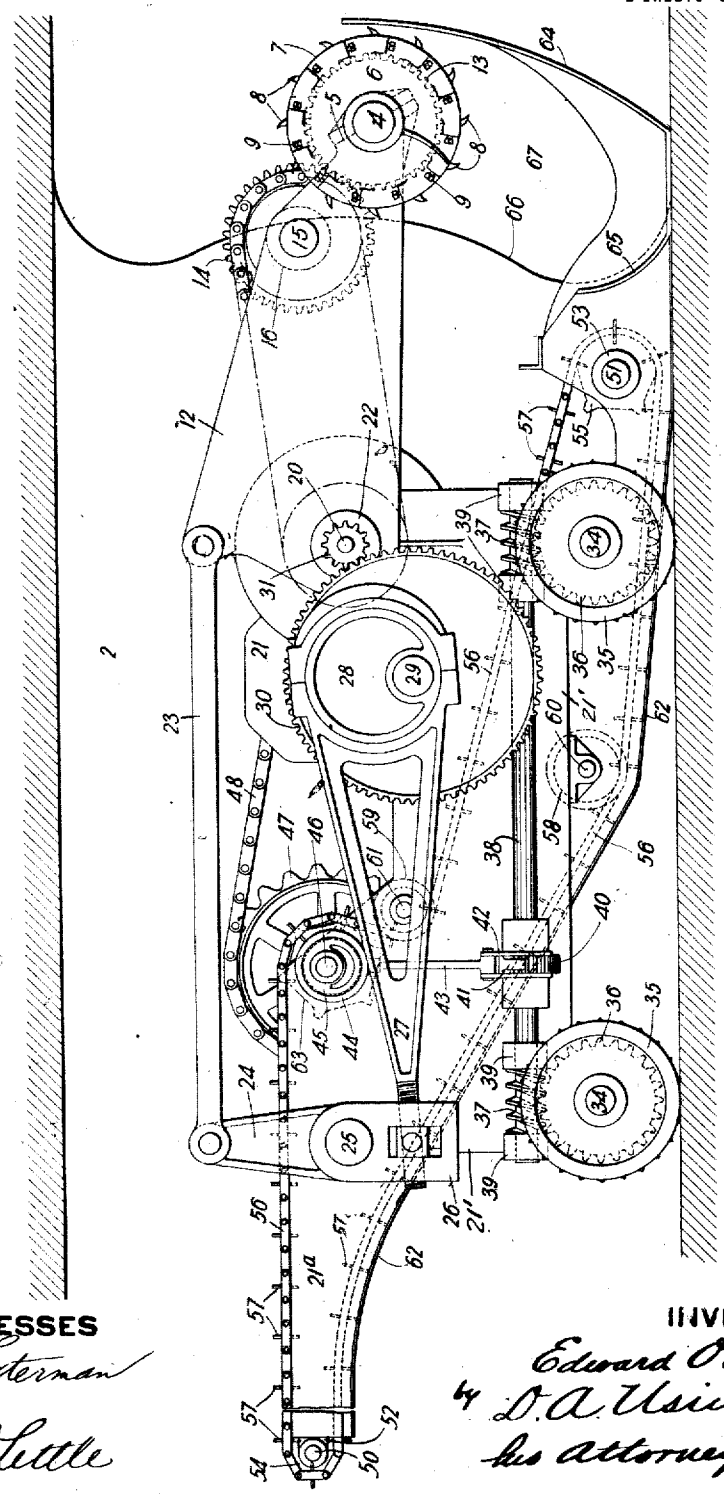

WITNESSES

Chas. Peterman

R. D. Little

INVENTOR

Edward O'Toole

by D. A. Usina

his attorney

UNITED STATES PATENT OFFICE.

EDWARD O'TOOLE, OF GARY, WEST VIRGINIA

SLABBING AND LOADING MACHINE.

1,336,440. Specification of Letters Patent. Patented Apr. 13, 1920.

Application filed December 28, 1917. Serial No. 209,349.

To all whom it may concern:

Be it known that I, EDWARD O'TOOLE, a citizen of the United States, and resident of Gary, in the county of McDowell and State of West Virginia, have invented a new and useful Slabbing and Loading Machine, of which the following is a specification.

My invention relates to apparatus used in mining coal and similar materials, and more particularly to the construction and arrangement of a mining machine for removing the coal or other material being mined from the sides or ribs of a previously driven head or entry.

In mining coal the heads or entries are driven at separated intervals, a quantity of coal remaining between the parallel entries which forms pillars or ribs to support the roof of the heads or entries.

One object of my invention is to provide a slabbing and loading machine of novel construction having improved means whereby the coal forming the ribs or sides of a head or entry can be safely removed without liability of damage to the mining machine or injury to the operatives of the machine.

Another object of my invention is to provide a mining machine having novel means for mechanically collecting and handling and delivering the cut coal into the mine cars or other vehicle in which it is removed from the mine.

Still further objects of the invention will appear as the invention is more fully disclosed hereinafter and specifically pointed out in the appended claims.

Referring to the drawings forming part of this specification, Figure 1 is a plan showing a slabbing and loading machine as constructed and arranged and positioned for use in the entry of a mine in accordance with my invention.

Fig. 2 is a longitudinal side elevation, on an enlarged scale, of the apparatus of Fig. 1.

In the accompanying drawings, the numeral 2 designates the mine entry which has been driven either by means of a mining machine or by hand in removing the coal.

After such entries are formed, as is done in removing the coal, the necessary clearance at the inner end of the entry on each side thereof is cut by hand and the coal removed from the ribs 3, 3, forming the sides of the entry so as to permit the cutter head forming part of this invention to be erected in place upon the mining machine.

Instead of using one machine to remove the coal and form the entry, a second machine may be employed in which the cutter head and shield are left off until positioned within the mine entry in readiness to receive the longer cutter head and shields necessary to remove the coal forming the ribs or sides of the entry.

When one machine is employed for both operations, after the cutter head of the mining machine used in driving the entry has been removed and the necessary clearance is cut on each side of the entry at its inner end, the cutter head shown in the accompanying drawings is mounted on the mining machine.

As shown, this cutter head comprises a horizontally extending rotary shaft 4 which is mounted in bearings 5, 5, and which has overhanging ends, the ends being provided with spiral conveyers 6, 6, which are made right and left hand so as to move the materials from the ends toward the middle of the length of the conveyer shaft 4.

The periphery or marginal edge 7 of the blade forming the spiral conveyers 6, 6, is provided, at separated intervals, with a series of radially extending picks or cutters 8, these cutters being removably and adjustably held in position by means of set screws 9.

As will be seen by reference to Fig. 1, the spiral conveyers extend into the openings 10, 10, cut by hand on each side of the entry in providing clearance for the cutter head so as to project for some distance beyond the face 11, 11, of the driven entry.

The rotatable shaft 4 is mounted in the bearings 5, 5, on the swinging end of vertically oscillating arms 12, 12, which are operatively connected to the driving mechanism, as will be explained hereinafter, and the shaft 4 is provided with a spur gear 13 meshing with a similar spur gear 14 on the countershaft 15 which is mounted in the bearings 16, 16, therefor on the vertically oscillating arms 12. The overhanging ends of the shaft 15 are provided with sprocket chain wheels 17, 17, which are connected by means of sprocket chains 18, 18 to the sprocket wheels 19 on the countershaft 20 of the driving motor 21 which is operatively mounted on the mining machine.

The arms 12, 12 are pivotally connected by the bearings 22, 22, to the countershaft 20 so

as to swing thereon and connecting rods 23, 23, operatively connect the swinging arms 12 with one end of the rocking levers 24, 24, mounted on and turning with the rocking shaft 25 which is pivoted on the machine at an intermediate point in the length of the frame or sides 21′ of the mining machine carriage.

The rocking shaft 25 is also provided with a lever arm 26 which is adjustably connected to one end of the eccentric rod 27 by which this lever arm 26 is operatively connected to the eccentric 28 on one end of the stub shaft 29. The stub shaft 29 is secured by one end to one side 21′ of the machine. A spur gear is loosely mounted on said shaft, which gear meshes with and is driven by the spur pinion 31 on one end of the motor countershaft 20. The spur gear and eccentric 28 are secured together and rotate in unison.

The carriage is provided with bearings in which shafts 34, 34, having traction wheels 35, 35, on the ends thereof are mounted, and these shafts each have a worm wheel 36 thereon meshing with worms 37, 37, on the ends of the horizontal rotary shaft 38 which is secured in bearings 39, 39, so as to extend lengthwise parallel with the side of the carriage. This shaft 38 is provided with a ratchet wheel 40 which is operatively engaged by the adjustable ratchet pawl 41 on the swinging ratchet 42, and the ratchet 42 is pivoted at one end to the shaft 38 and is connected at its other end by a rod 43 to the eccentric strap 44 on the eccentric 45 which is mounted on the end of and rotates with the shaft 46.

One end of the shaft 46 which actuates the eccentric 45 and also drives the flight conveyer has a sprocket chain wheel 47 thereon which is operatively connected by the sprocket chain 48 to the driving sprocket wheel 49 mounted on one end of the motor countershaft 20.

The carriage of the machine has an elevated tail portion 21ª and the opposite ends of the carriage are provided with shafts 50 and 51 which are mounted in the bearings 52, 52, and 53, 53, and having sprocket wheels 54, 54, and 55, 55, thereon around which the endless conveyer chains 56, 56, extend. The conveyer chains 56 of which there is one on each side of the machine, are connected together by conveyer flights 57 which extend across the width of the machine at intervals in the length of the chain. Idler sprocket wheels 58 and 59 are provided on shafts 60 and 61 to guide the conveyer chains 56 and the lower edges of the flights 57 on the lower strands of the sprocket chains 56 engage with the flat bottom 62 extending between the sides 21′ of the mining machine to convey the mined coal from the front to and over the rear end of the elevated tail 21ª of the mining machine.

The shaft 46 has sprocket wheels 63 thereon which engage with and drive the conveyer chains 56, 56, when the shaft 46 is caused to rotate.

The mining machine, on its front end, in front of the cutter head on the shaft 4 is provided with a shield 64 which extends upwardly from the bottom of the entry and which is connected at its bottom to shorter vertically extending shields 65, 65, one of which is provided on each side of the mining machine between the sides 21′ of the machine and the faces 11, 11, of the mine entry 2.

The space between the adjacent ends of the shields 65, 65, is left open to permit of the mined coal being discharged in front of the center of the width of the machine by the spiral conveyers 6, 6, in position to be engaged by the flights 57 of the chain conveyer.

In the operation of my improved apparatus the short cutter head used on the mining machine in driving the entry 2 is removed. The shields 64 and 65, 65, are then attached to the front end of the mining machine, and the cutter head shown is erected in place.

It will be understood that sufficient coal will be removed from each rib or side 3 of the entry by hand to permit of the attachment of the cutter head shown to the machine and the erection of the shields in place.

In driving the entry 2 the mining machine is advanced inwardly during the coal removing operations. The apparatus being erected as shown, is then started by causing the motor 21 to rotate, which operation starts the shaft 4 of the cutter head to rotate and the swinging arms 12, 12, supporting the cutter head to oscillate, the cutter head being oscillated vertically.

Such rotary and oscillating movement of the cutter head causes the picks 8 on the periphery 7 of the spiral conveyers 6, 6, to engage with the face 66 of the coal in the ribs on each side of the entry, and at the same time the ratchet 42 is caused to reciprocate and thereby rotate the traction wheels 35 to move the mining machine outwardly or backwardly in the entry.

Engagement of the picks 8 with the face of the ribs removes the coal, which falls to the bottom of the opening 67 into which the projecting ends of the cutter head extend and when the spiral conveyers 6, 6, forming part of the cutter head are at their bottom or lowermost position the right and left hand spiral conveyers act to move the mined coal from in front of the ribs into position in front of the conveyer 56.

The shields 64 prevent the coal from remaining behind the retreating mining machine and with the shields 65, 65, cause the

coal to all be delivered into position to be engaged by the conveyer flights or scraper bars 57.

The flights 57 engage with the mined coal and convey it along the bottom 62 of the mining machine and finally deliver it over the end of the tail 21ª of the machine into a mine car or other receptacle placed beneath the mining machine to receive the mined coal. The ratchet pawl 41 by engagement with the ratchet wheel 40 acts to cause the machine to move backwardly, so as to maintain the cutters 8 in cutting engagement with the face 66 of the coal ribs.

The advantages of my invention will be apparent to those skilled in the art.

By the use of my improved apparatus the coal forming the ribs or major portion of the ribs between the entries of a mine is readily removed with entire safety and the danger of injury to the workmen caused by removing the ribs by hand is avoided and overcome.

Modifications in the construction and arrangement of the parts may be made without departing from my invention as defined in the appended claims.

I claim:—

1. In a mining machine the combination with a wheeled carriage of a vertically oscillating arm mounted thereon, a helical cutter head rotatably mounted on the arm and having a series of pick like cutters secured thereto, means for oscillating said arm, means for rotating the cutter head and means carried by said machine in advance of said cutter head for collecting the mined material.

2. In a mining machine, the combination with a wheeled carriage, of a vertically oscillating arm, a shaft mounted in said arm, said shaft having its ends projecting an appreciable distance beyond the sides of said carriage, spiral conveyers on said projecting end portions only, said conveyers having a series of pick like cutters secured thereto, means for simultaneously oscillating the arm and rotating said shaft, and means for collecting the cut material.

3. In a mining machine the combination with a wheeled carriage of a vertically oscillating arm mounted thereon, a rotatable cutter head mounted on the arm comprising a helical conveyer with a series of pick like cutters secured thereto, means for simultaneously oscillating the arm and rotating the cutter head, at least one end of said cutter head extending lengthwise beyond the side of the mining machine into engagement with the face of the coal being removed thereby, and a shield on the forward end of the mining machine whereby the mined material is collected and maintained in position to be engaged by the cutter head.

4. In a mining machine the combination with a wheeled carriage of a vertically oscillating arm, a rotatable cutter head mounted on the arm comprising a helical conveyer having a series of pick like cutters secured thereto, means for simultaneously oscillating the arm and rotating the cutter head, the ends of said cutter head extending lengthwise beyond the sides of the mining machine into engagement with the face of the material being mined thereby, and shields on the forward end of the carriage whereby the mined material is collected and maintained in position for engagement by said helical conveyer.

5. In a mining machine, the combination with a wheeled carriage, of a vertical oscillating arm, a cutter head mounted on the arm and having a series of pick like cutters secured thereto, mechanical means for simultaneously oscillating said arm and rotating said cutter head, the ends of said cutter head extending lengthwise an appreciable distance beyond the sides of the mining machine into engagement with the face of the material being cut, and means carried on the extreme forward end of said machine for collecting the material after being cut.

In witness whereof I have hereunto set my hand.

EDWARD O'TOOLE.

Witnesses:
E. C. Powers,
J. D. Kington.