(12) UK Patent Application (19) GB (11) 2 296 879 (13) A

(43) Date of A Publication 17.07.1996

(21) Application No 9500424.8

(22) Date of Filing 10.01.1995

(71) Applicant(s)
Notetry Limited

(Incorporated in the United Kingdom)

Sycamore House, Bathford, BATH, BA1 7RS, United Kingdom

(72) Inventor(s)
James Dyson

(74) Agent and/or Address for Service
Marks & Clerk
57-60 Lincoln's Inn Fields, LONDON, WC2A 3LS, United Kingdom

(51) INT CL^6
B04C 3/06

(52) UK CL (Edition O)
B2P P10B2A2 P4
U1S S1233

(56) Documents Cited
EP 0489565 A **EP 0054691 A** **US 5062870 A**
US 4853008 A **US 4643748 A**

(58) Field of Search
UK CL (Edition N) **B2P P4**
INT CL^6 **B04C**
Other: EDOC, JAPIO, WPI.

(54) Dust separation apparatus

(57) The invention provides dust separating apparatus (10) comprising a cyclone (14) having an outer wall (14a) and an air inlet (12), a shroud (16) and an airflow path, the airflow path being arranged so as to direct an airflow flowing, in use, in the dust separating apparatus into the cyclone (14) via the air inlet (12) and out of the cyclone through the shroud (16). The air inlet (12) of the cyclone (14) is formed by a conduit (12a) projecting into the cyclone (14) between the outer wall (14a) and the shroud (16). This allows a swivel coupling to be attached to the air inlet (12) providing greater flexibility and maneouverability of the dust separating apparatus (10).

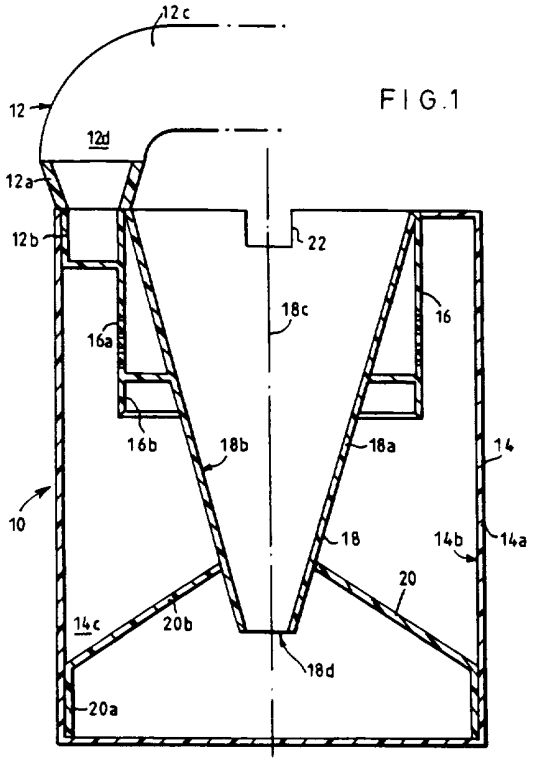

FIG.1

GB 2 296 879 A

At least one drawing originally filed was informal and the print reproduced here is taken from a later filed formal copy.

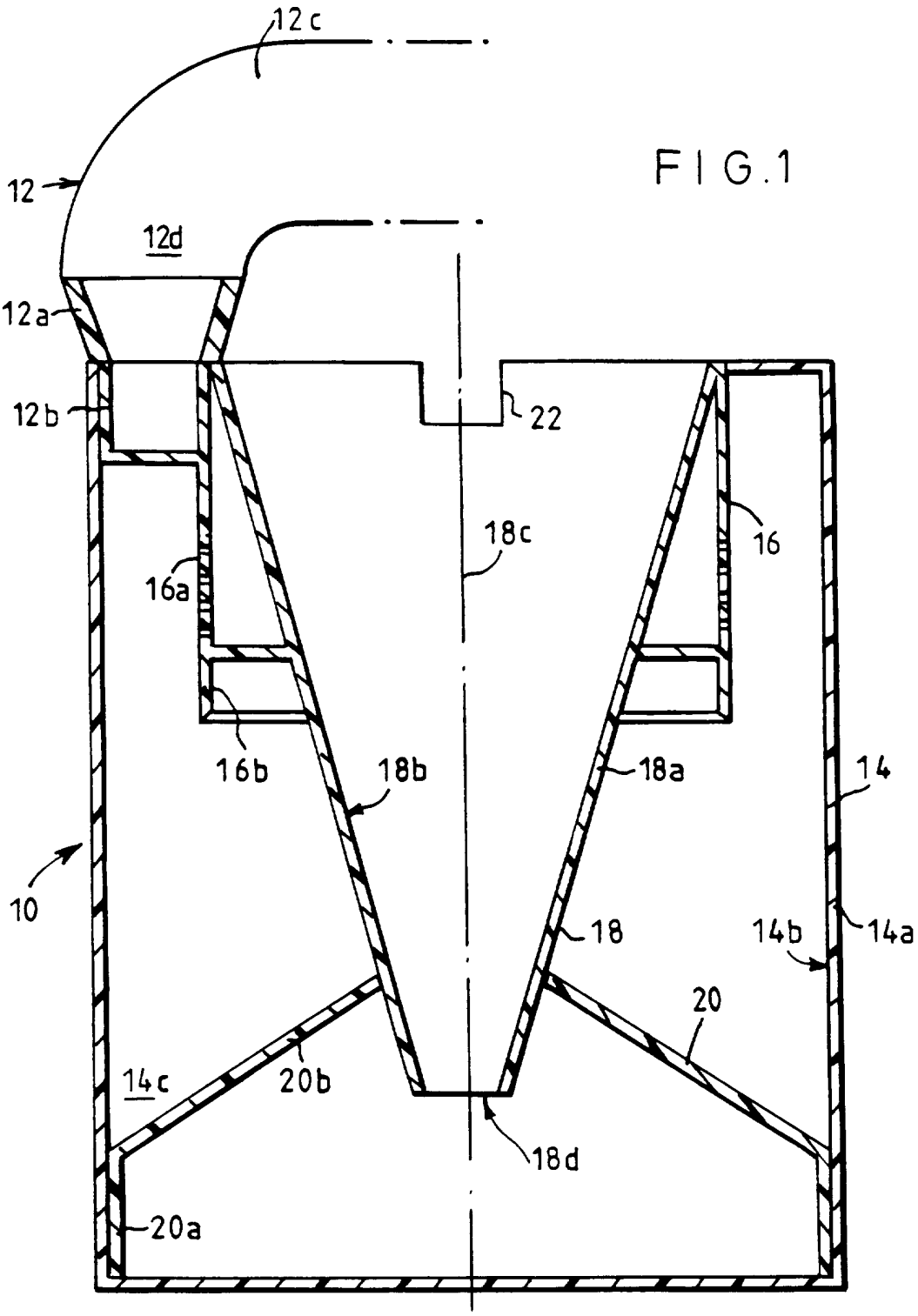
12c
12
12d
12a
12b
22
18c
16
16a
16b
18b
18a
14
10
18
14b
14a
20
14c
20b
18d
20a

FIG.1

FIG.2

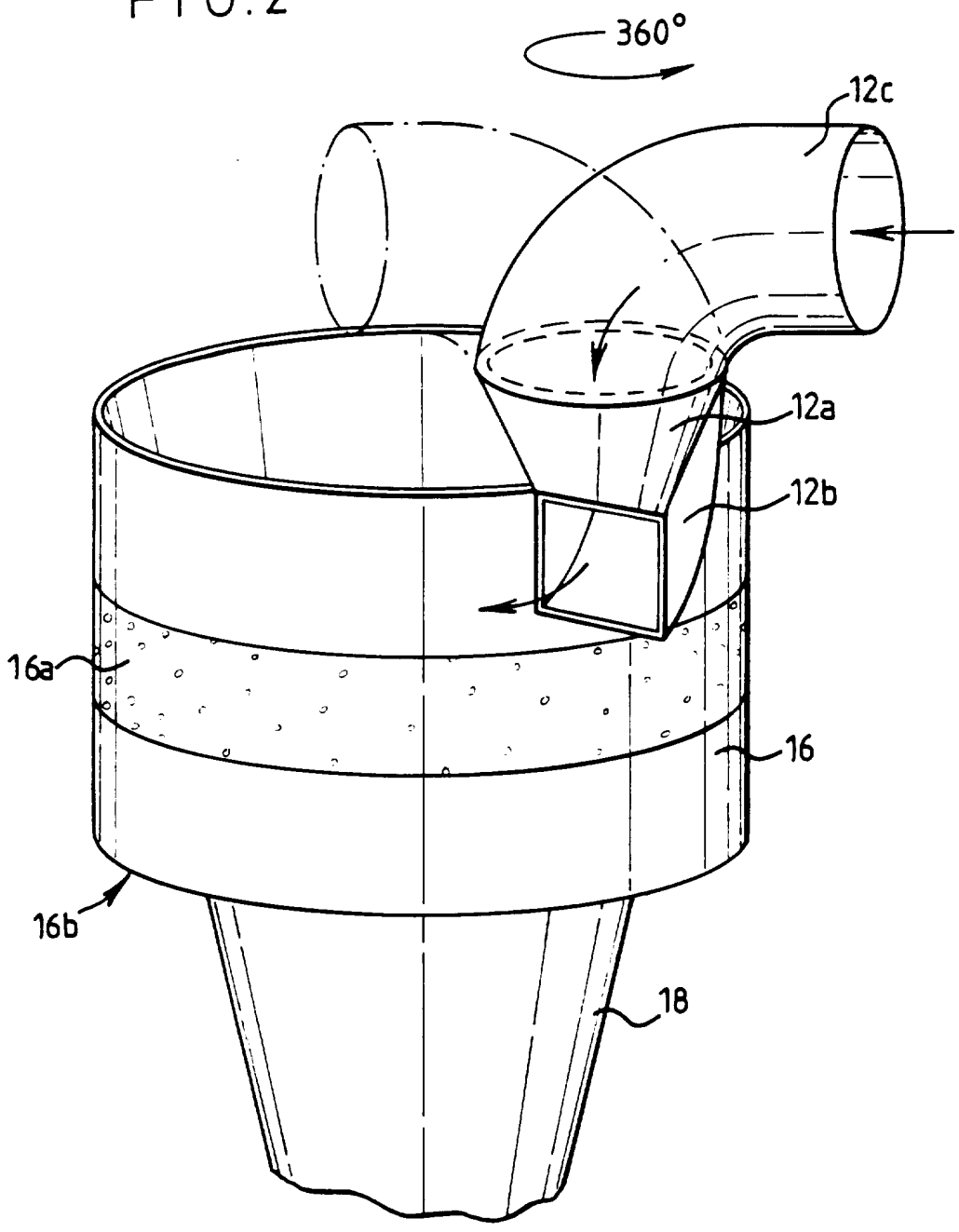

2296879

DUST SEPARATION APPARATUS

The invention relates to dust separating apparatus, particularly but not exclusively to dust separating apparatus for use in vacuum cleaners.

Vacuum cleaners which incorporate dust separating apparatus consisting of two cyclones and a shroud are known. The cyclones are arranged one inside the other with the shroud located between them so that, in use, air first enters the low efficiency cyclone and then passes through the shroud before entering the inner, high efficiency cyclone. In order to ensure that the airflow in each cyclone follows an appropriate helical path, each cyclone has a tangential air inlet consisting of a conduit which approaches the relevant cyclone tangentially and terminates at the cylindrical or conical outer wall of the cyclone. Air flowing along the conduit then passes tangentially into the cyclone and follows the appropriate helical path.

The need for a tangential air inlet to each cyclone, combined with the belief that any irregular protrusions within the outer wall of the cyclone will disturb the airflow, has meant that, until now, all cyclonic dust separation means used in vacuum cleaners have had

horizontal air inlets, ie. air inlets arranged perpendicular to the longitudinal axis of the cyclones. The development of a compact cylinder-type vacuum cleaner which utilises cyclonic dust separation apparatus has now created a need for such apparatus having an air inlet which is vertical or parallel to the axes of the cyclones. The provision of such apparatus in a vacuum cleaner would then allow a wand or hose to be attached to the inlet via a swivel coupling pivotable within a generally horizontal plane which then gives greater flexibility and freedom of movement of the wand or hose.

The invention provides dust separating apparatus as claimed in claim 1 and a vacuum cleaner as claimed in claim 11. Preferable and advantageous features are set out in the subsidiary claims.

As mentioned above, the invention allows a hose or wand to be coupled to the inlet via a swivel coupling. Also, because the conduit projects into the cyclone, the conduit is rendered easily visible and accessible thus facilitating the removal of blockages of the inlet. The projection of the conduit into the cyclone also means that the cyclone can be increased in length with the result that the cyclone has added capacity to collect separated dirt and dust.

An embodiment of the invention will now be described with reference to the accompanying drawings wherein:

Figure 1 is a sectional side view of dust separating apparatus according to the invention; and

Figure 2 is a perspective side view of the inlet and shroud forming part of the apparatus shown in Figure 1.

The apparatus 10 shown in the drawings is suitable for use in a vacuum cleaner. The apparatus 10 incorporates a dirty air inlet 12, an outer low efficiency cyclone 14, a shroud 16, an inner high efficiency cyclone 18, a fine dust collector 20 and an exit port 22. The outer cyclone 14, the shroud 16, the inner cyclone 18, the collector 20 and the exit port 22 are all of known design and do not form essential parts of the present invention. Therefore, they will be described only briefly here.

The outer cyclone 14 has an outer wall 14a having an inner surface 14b. A dirt and dust collecting area 14c is located adjacent the lower end of the outer wall 14a.

The inner cyclone 18 consists of a frusto-conical wall 18a having an inner surface 18b and a longitudinal axis 18c. The conical wall 18a terminates in a cone opening 18d which opens into the fine dust collector 20. The fine dust collector 20 is substantially larger in diameter at its outer walls 20a than the cone opening 18d. The outer walls 20a are connected to the frusto-conical wall 18a of the inner cyclone 18 by means of inclined walls 20b. These inclined walls 20b also

form the lower boundary of the dust collecting area 14c of the outer cyclone 14.

Positioned between the outer and inner cyclones 14, 18 is the shroud 16. The shroud 16 is manufactured separately from the frusto-conical wall 18a of the inner cyclone 18 and connected thereto during manufacture. The shroud 16 has a cylindrical portion 16a which contains a multiplicity of perforations (not shown). Depending from the cylindrical portion 16a is an annular lip 16b comprising a parallel-sided portion having an inclined end surface. The inclined end surface is preferably inclined at an angle of 45° to the longitudinal axis 18c of the inner cyclone 18. Means for allowing passage of air from the interior of the shroud 16 to the interior of the inner cyclone 18 are provided but, for reasons of clarity, are not shown. The air transfer means ensure that air passing from the interior of the shroud 16 to the interior of the inner cyclone 18 enter the upper end of the inner cyclone 18 in a tangential manner.

The inner cyclone 18 is also provided with an exit port 22 which is located substantially centrally of the end of the inner cyclone 18 having the larger diameter. The exit port 22 is conveniently connected to an appropriate clean air exhaust port.

The apparatus shown in Figure 1 is normally used in the following manner. Dirt-laden air enters the outer

cyclone 14 tangentially via an air inlet. The airflow spirals down the inner surface 14b of the outer wall 14a and, whilst the airflow then continues along the airflow path by passing upwardly towards the shroud 16, larger particles of fluff and dirt are collected in the dirt and dust collecting area 14c of the outer cyclone 14. As the airflow passes towards the shroud 16, the lip 16b discourages any blocking of the perforations of the shroud 16. The airflow passes through the perforations in the cylindrical portion 16a of the shroud 16 and then passes from the interior of the shroud 16 to the upper end of the inner cyclone 18. Because of the tangential entry into the inner cyclone 18, the airflow spirals down the inner surface 18b of the frusto-conical wall 18a of the inner cyclone 18. Most of the air subsequently moves towards the axis 18c of the inner cyclone 18 and then exits via the exit port 22. However, dirt and dust particles previously entrained within the airflow spiral downwards towards the cone opening 18d and emerge into the collector 20 at very high speeds. The dirt and dust particles are flung towards the side walls 20a of the collector 20 and collect at the bottom of the collector 20. The remaining air passes back through the cone opening 18d into the inner cyclone 18 and subsequently exits the apparatus via the exit port 22.

In all prior art apparatus, the air inlet 12 has

consisted of a conduit arranged substantially horizontally, ie. perpendicular to the longitudinal axis 18c of the inner cyclone 18, and which terminates at the outer wall 14a of the outer cyclone 14. This has previously effected a tangential entry into the outer cyclone 14 without causing any unnecessary disturbance to the airflow within the outer cyclone 14. According to the present invention however, the inlet 12 consists of a conduit 12a arranged substantially vertically or parallel to the axis 18c of the inner cyclone 18. The conduit 12a passes into the interior of the outer cyclone 14 between the outer wall 14a and the cylindrical portion 16a of the shroud 16. The conduit 12a also comprises a right angle bend 12b which causes the incoming airflow to exit the conduit 12a in a manner which is tangential to the outer wall 14a. It has been found that this arrangement does not unduly disturb the airflow within the outer cyclone 14. The distance between the outer wall 14a of the outer cyclone 14 and the cylindrical portion 16a of the shroud 16 is preferably between 15mm and 30mm and the efficiency of the apparatus is particularly high if this distance is substantially 20mm.

It is highly advantageous to be able to introduce the airflow into the outer cyclone from above the outer cyclone 14. In particular, this allows a hose 12c to be attached to the conduit 12a by means of a swivel

coupling. When the apparatus 10 is utilised in a cylinder-type vacuum cleaner, this allows the hose 12c, to the end of which a cleaning tool is attached, to be swivelled through 360° about the axis 12d of the conduit 12a, ie. within a substantially horizontal plane. This in turn allows greater flexibility and maneouverability of the machine than would be achievable without the swivel coupling.

It will be appreciated that it is not necessary to attach the hose 12c to the conduit 12a in a plane which is perpendicular to the axis 12d of the conduit. An inclined connection could be provided which would allow the hose 12c to swivel in a plane which is inclined to the axis 12d. This is particularly useful when the apparatus 10 is incorporated into a vacuum cleaner in an inclined manner, ie. the axis 18c is inclined to the vertical. This, in turn, means that the axis 12d will be inclined to the vertical but the swivel coupling between the hose 12c and the conduit 12a can be such that the hose 12c can swivel in a substantially horizontal plane or, indeed, any other convenient plane.

It will be apparent to any reader skilled in the art that the invention is not limited to the specific embodiment described above. Various modifications and alterations will fall within the scope of the invention.

CLAIMS

1. Dust separating apparatus comprising a cyclone having an outer wall and an air inlet, a shroud and an airflow path, the airflow path being arranged so as to direct an airflow flowing, in use, in the dust separating apparatus into the cyclone via the air inlet and out of the cyclone through the shroud, wherein the air inlet of the cyclone is formed by a conduit projecting into the cyclone between the outer wall thereof and the shroud.

2. Dust separating apparatus as claimed in claim 1, wherein the gap between the outer wall of the cyclone and the shroud is between 15mm and 30mm.

3. Dust separating apparatus as claimed in claim 2, wherein the gap between the outer wall of the cyclone and the shroud is substantially 20mm.

4. Dust separating apparatus as claimed in any one of the preceding claims, wherein the conduit forming the air inlet is arranged to enter the cyclone substantially parallel to the longitudinal axis of the cyclone.

5. Dust separation apparatus as claimed in claim 4, wherein the conduit incorporates a right-angle bend so

as to cause the airflow to flow, in use, in a tangential manner in the cyclone.

6. Dust separation apparatus as claimed in claim 4 or 5, wherein a swivel coupling is provided between the conduit and an airflow path immediately upstream of the conduit.

7. Dust separation apparatus as claimed in any one of the preceding claims, wherein the conduit is formed integrally with the shroud.

8. Dust separation apparatus as claimed in any one of the preceding claims, wherein the shroud incorporates a lip depending from the edge of the shroud remote from the conduit.

9. Dust separation apparatus as claimed in any one of the preceding claims, further comprising a second cyclone arranged downstream of the shroud.

10. Dust separation apparatus substantially as hereinbefore described with reference to the accompanying drawings.

11. A vacuum cleaner incorporating dust separation apparatus according to any one of the preceding claims.

The Patent Office

10

Application No: GB 9500424.8
Claims searched: 1-11

Examiner: Diane Davies
Date of search: 6 April 1995

Patents Act 1977
Search Report under Section 17

Databases searched:

UK Patent Office collections, including GB, EP, WO & US patent specifications, in:

UK Cl (Ed.N): B2P: P4

Int Cl (Ed.6): B04C

Other: EDOC, JAPIO, WPI

Documents considered to be relevant:

Category	Identity of document and relevant passage		Relevant to claims
X	EP 0489565 A	(Notetry Ltd.) Whole document: air inlet passage (32) between the outer wall of first cyclone and the shroud.	1-11
X	EP 0054691 A	(H.J. Obermeier) Whole document: air inlet tube (46) situated between the outer wall of the cyclone and an inner shroud.	1
X	US 5062870 A	(Notetry Ltd.) Whole document: air inlet passage (21) between the outer wall of the first cyclone and the shroud (see in particular column 4 lines 59-65)	1-11
X	US 4853008 A	(Notetry Ltd.) Whole document: air inlet passage (13c) between the outer wall of first cyclone and the shroud.	1-11

X	Document indicating lack of novelty or inventive step	A	Document indicating technological background and/or state of the art.
Y	Document indicating lack of inventive step if combined with one or more other documents of same category.	P	Document published on or after the declared priority date but before the filing date of this invention.
&	Member of the same patent family	E	Patent document published on or after, but with priority date earlier than, the filing date of this application.

The Patent Office

11

Application No: GB 9500424.8 **Examiner:** Diane Davies
Claims searched: 1-11 **Date of search:** 6 April 1995

Category	Identity of document and relevant passage	Relevant to claims
X	US 4643748 A (Notetry Ltd.) Whole document: air inlet passage (13c) between the outer wall of first cyclone and the shroud.	1-11

X	Document indicating lack of novelty or inventive step	A	Document indicating technological background and/or state of the art.
Y	Document indicating lack of inventive step if combined with one or more other documents of same category.	P	Document published on or after the declared priority date but before the filing date of this invention.
&	Member of the same patent family	E	Patent document published on or after, but with priority date earlier than, the filing date of this application.