United States Patent [19]

Ichitsubo

[11] **Patent Number: Des. 314,567**

[45] **Date of Patent: ** Feb. 12, 1991**

[54] **MEMORY CARTRIDGE HOLDER**

[75] Inventor: **Norio Ichitsubo**, Yao, Japan

[73] Assignee: **Hosiden Electronics Co., Ltd.**, Yao, Japan

[**] Term: **14 Years**

[21] Appl. No.: **312,251**

[22] Filed: **Feb. 21, 1989**

[30] **Foreign Application Priority Data**

Aug. 24, 1988 [JP] Japan 63-33513

[52] **U.S. Cl.** **D14/114**

[58] **Field of Search** ..... D14/100, 107, 114; D13/162, 147, 199; 206/244, 312; 360/97-99, 132, 133; 361/392, 394, 395, 399, 413, 415; 174/52 R; 273/148 B, 16 C; 439/59, 61

[56] **References Cited**

U.S. PATENT DOCUMENTS

D. 305,117	12/1989	Masuda et al.	D14/114
4,301,486	11/1981	Brown et al.	360/133 X
4,380,360	4/1983	Parmer et al.	439/59
4,596,390	6/1986	Studley	273/148 B
4,679,106	7/1987	Okita et al.	360/133 X
4,928,271	5/1990	Verhagen	369/292

Primary Examiner—Wallace R. Burke
Assistant Examiner—Freda S. Nunn
Attorney, Agent, or Firm—Jones, Tullar & Cooper

[57] **CLAIM**

The ornamental design for a memory cartridge holder, as shown and described.

DESCRIPTION

FIG. **1** is a front, top and right side perspective view of a memory cartridge holder showing my new design;
FIG. **2** is a front elevational view thereof;
FIG. **3** is a rear elevational view thereof;
FIG. **4** is a right side elevational view thereof;
FIG. **5** is a left side elevational view thereof;
FIG. **6** is a top plan view thereof;
FIG. **7** is a bottom plan view thereof;
FIG. **8** is a top, front and right side perspective view thereof in the open position to receive a memory cartridge;
FIG. **9** is a rear, front and left side perspective view thereof in the open position to receive a memory cartridge.

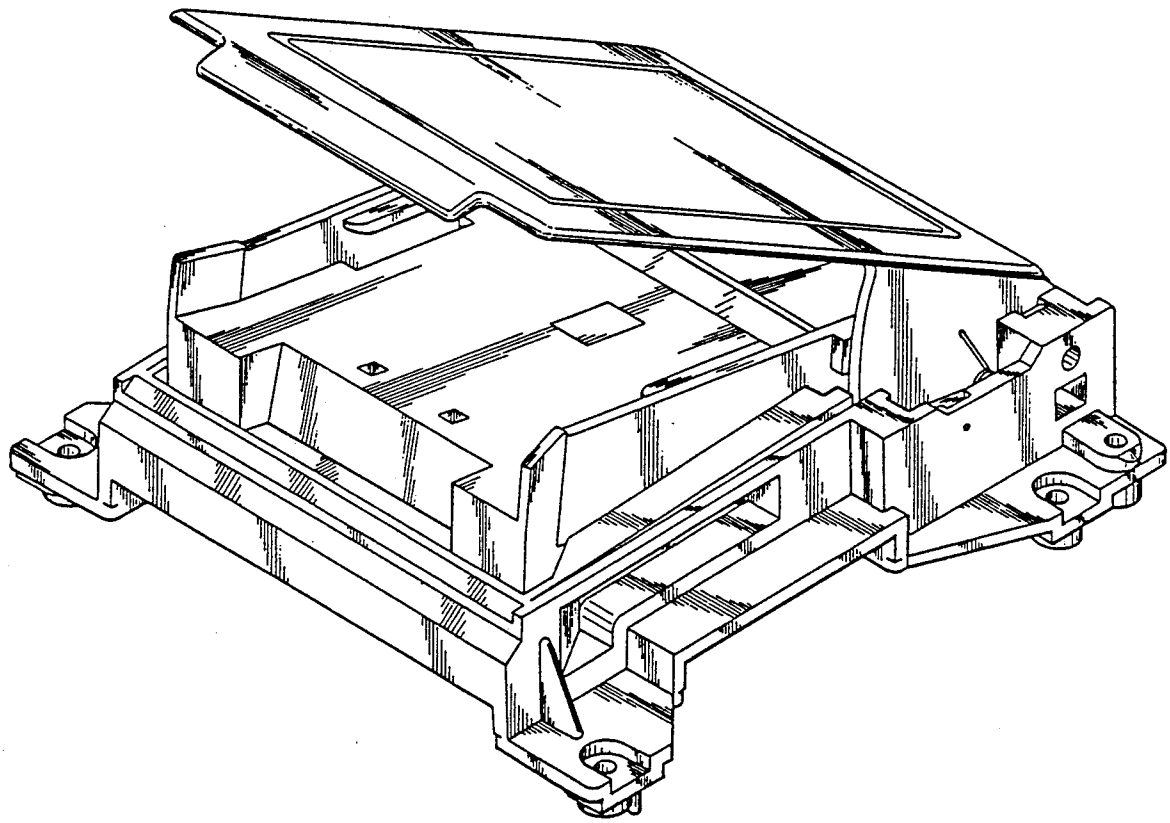

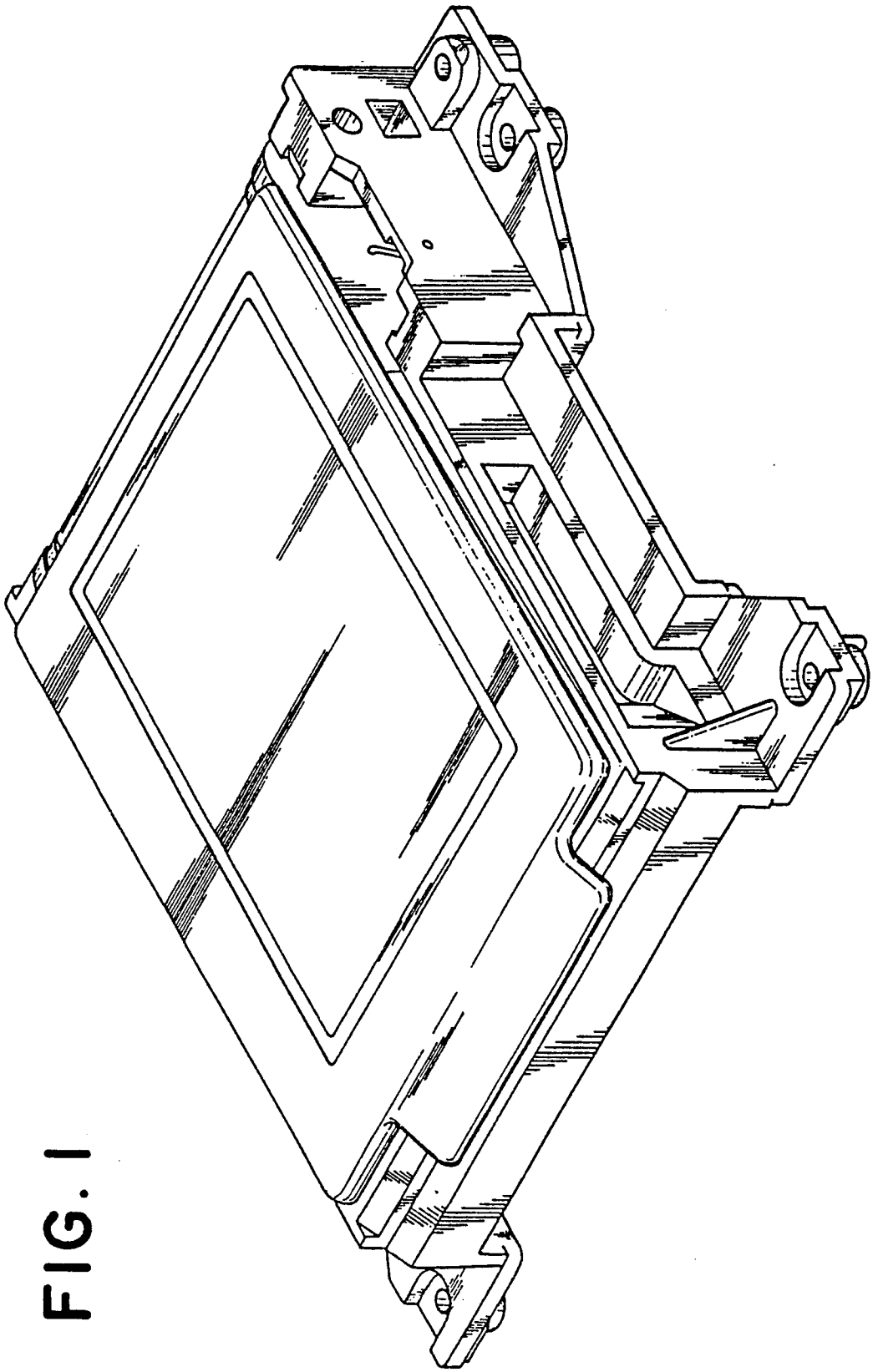

FIG. 1

FIG. 2

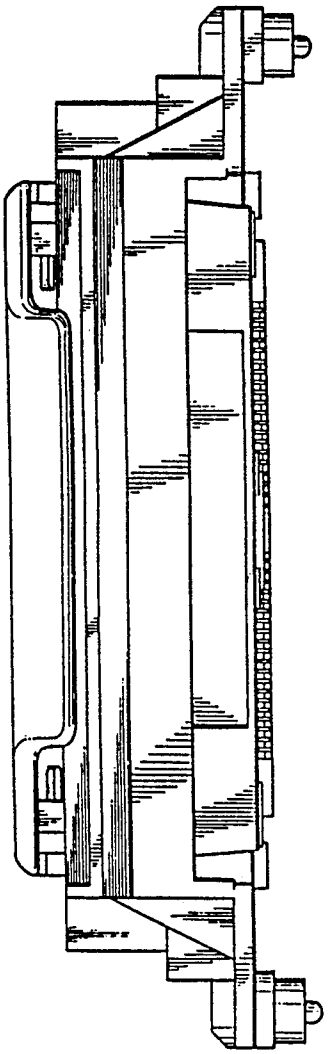

FIG. 3

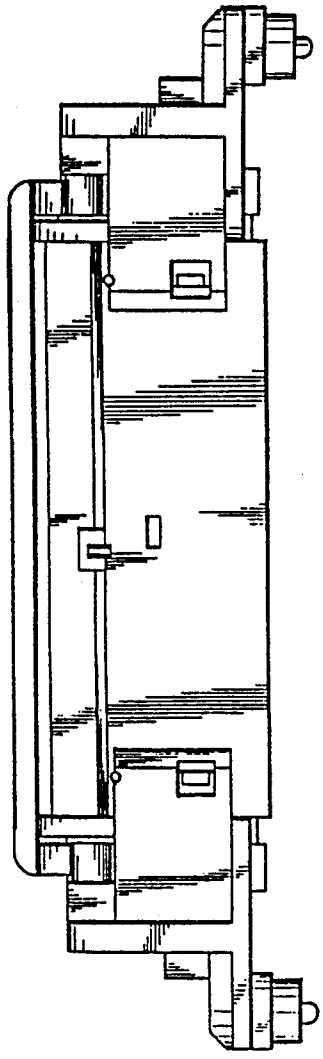

FIG. 4

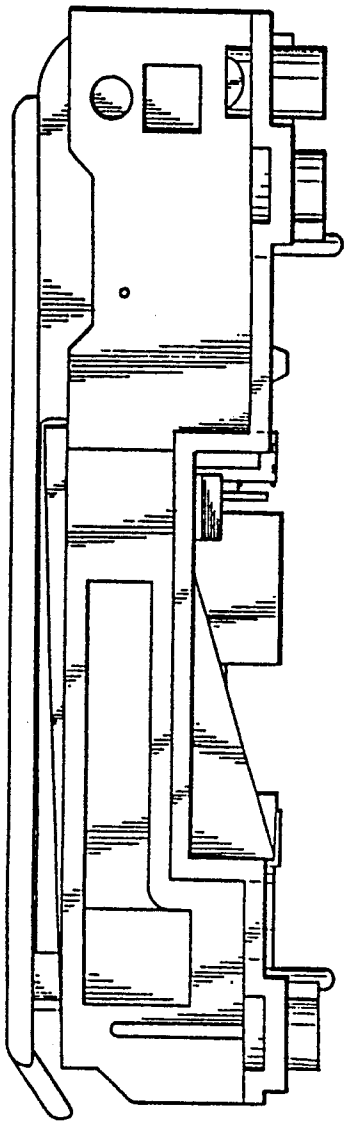

FIG. 5

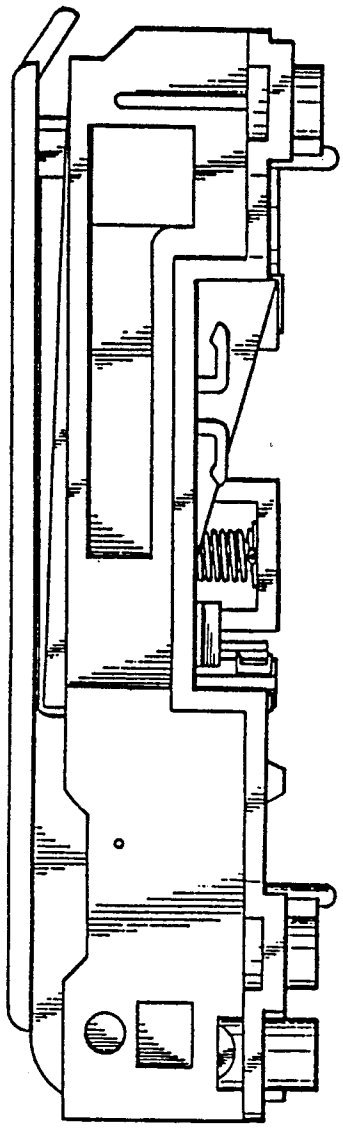

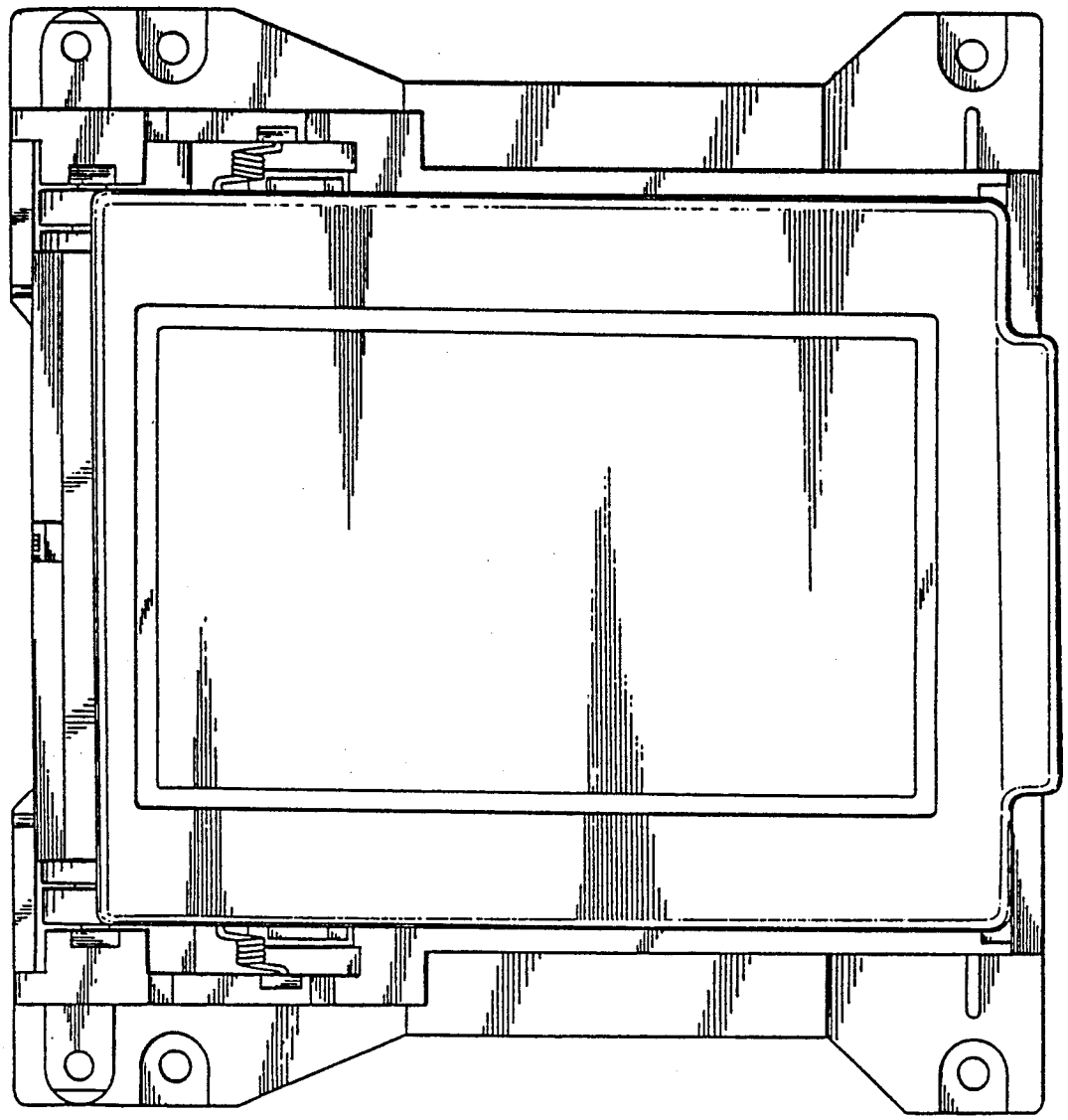

FIG. 6

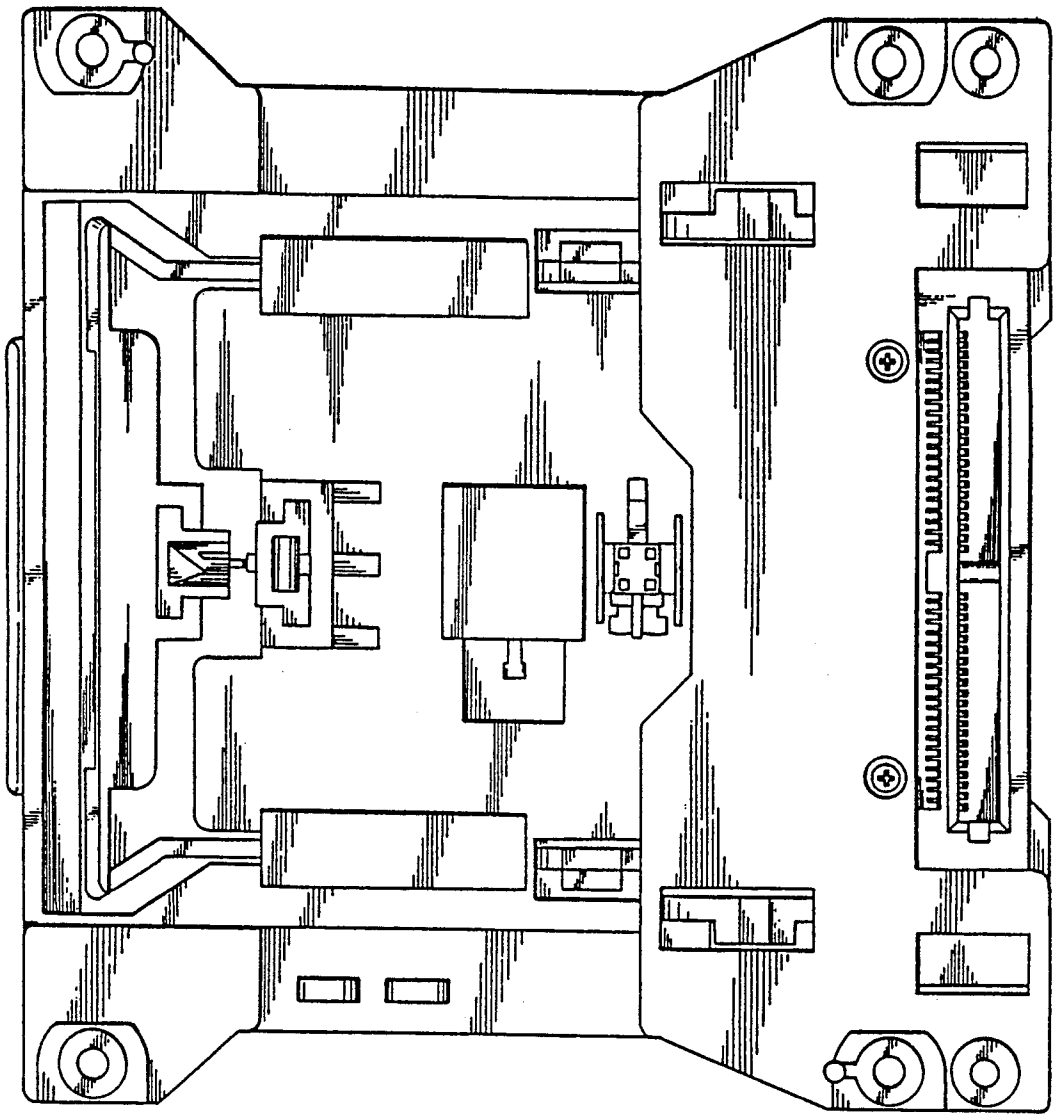

FIG. 7

FIG. 8

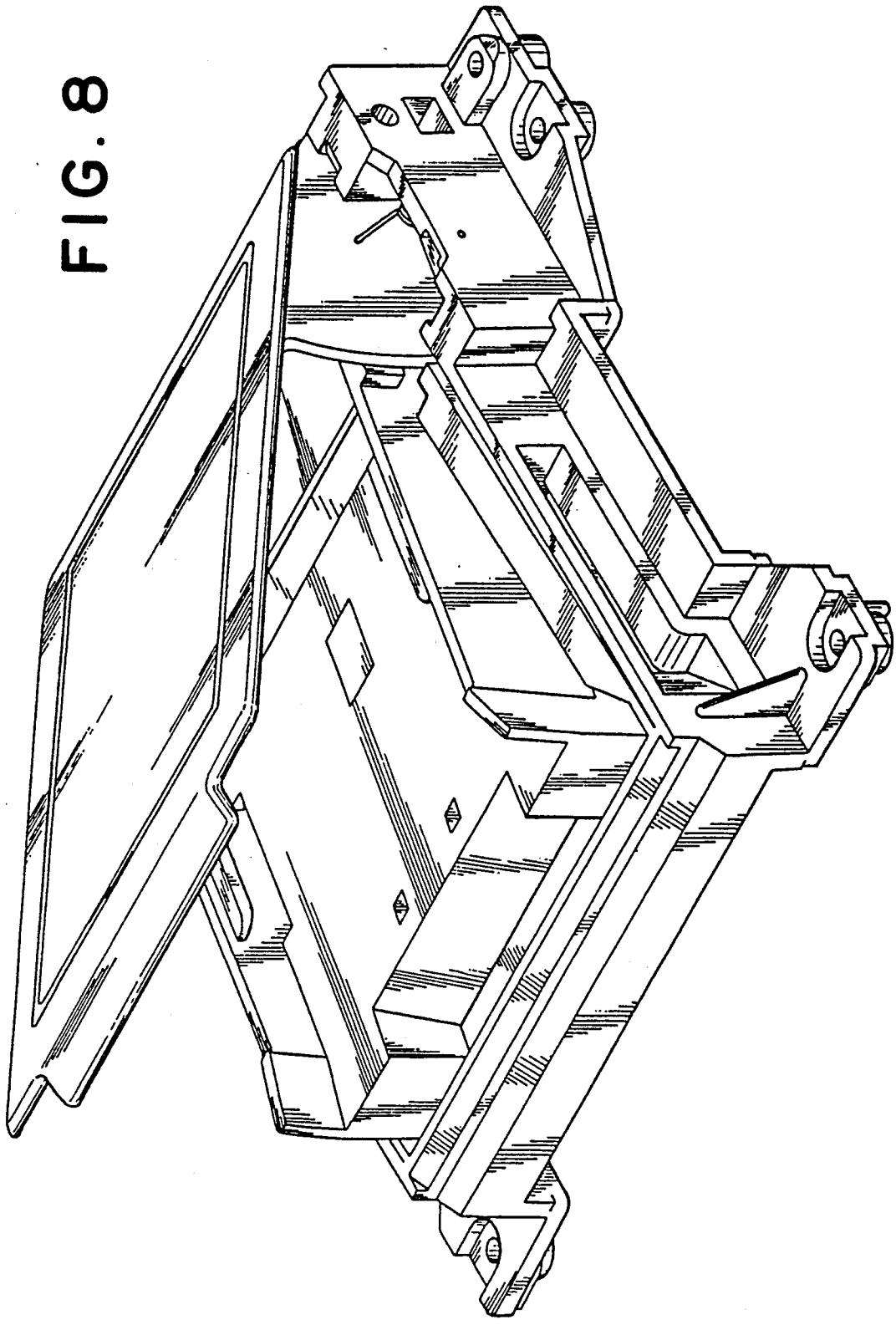

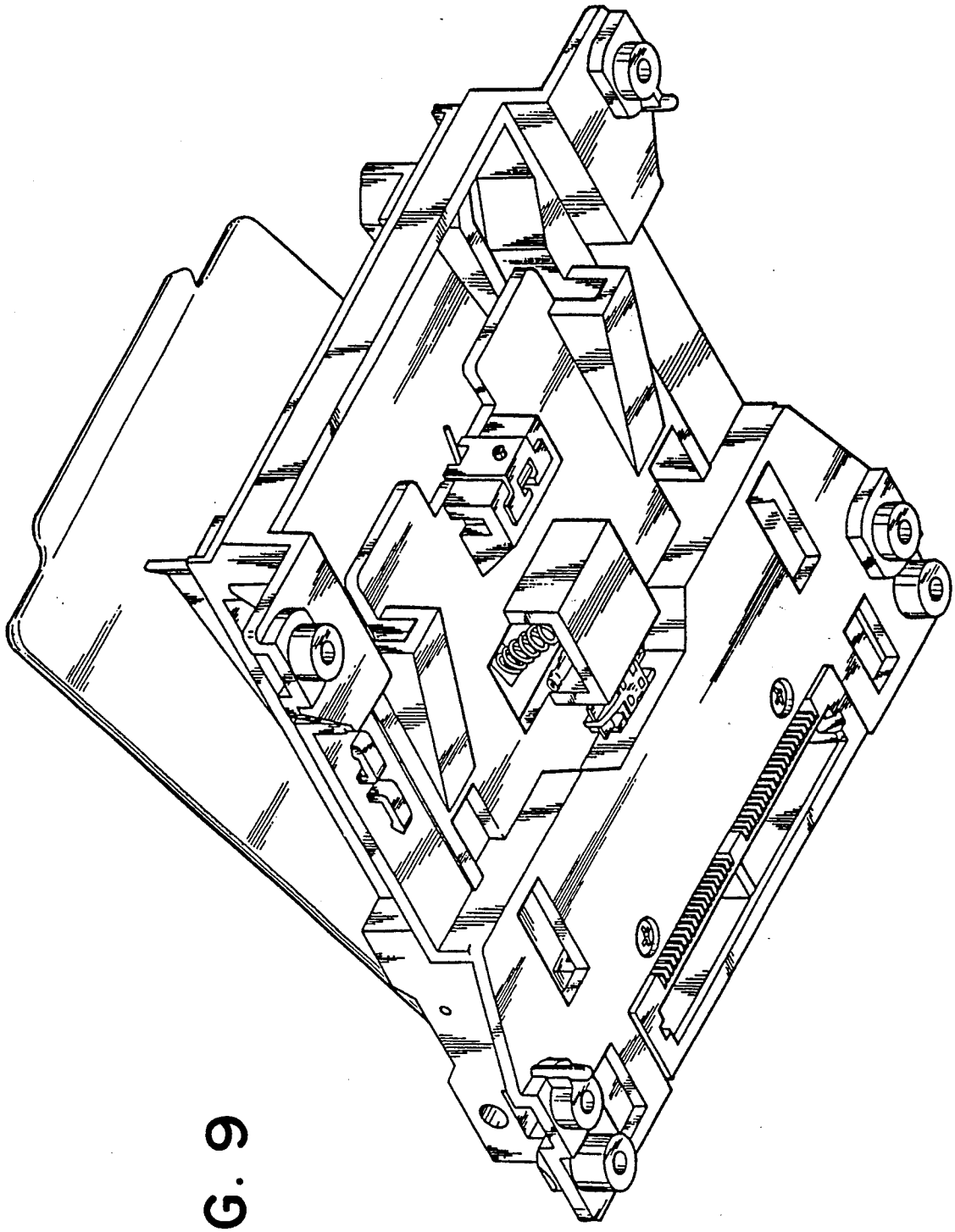

FIG. 9