(12) INTERNATIONAL APPLICATION PUBLISHED UNDER THE PATENT COOPERATION TREATY (PCT)

(19) World Intellectual Property Organization
International Bureau

(43) International Publication Date
07 February 2019 (07.02.2019)

WIPO | PCT

(10) International Publication Number
WO 2019/027730 A1

(51) International Patent Classification:
H01R 13/648 (2006.01) *H01R 43/16* (2006.01)

(21) International Application Number:
PCT/US2018/043440

(22) International Filing Date:
24 July 2018 (24.07.2018)

(25) Filing Language: English

(26) Publication Language: English

(30) Priority Data:
62/539,656 01 August 2017 (01.08.2017) US

(71) Applicant: **DELPHI TECHNOLOGIES, LLC** [US/US]; P.O. Box 5052, M/C: 483-400-402, Troy, MI 48007-5052 (US).

(72) Inventors: **LOVITZ, William, C.**; 1731 Niles Vienna Road, Niles, OH 44446 (US). **REEDY, Patrick, J.**; 7021 Ruby Court, Youngstown, OH 44515 (US). **ROBISON, Glenn, E.**; 4783 Logan Arms Drive, Youngstown, OH 44505 (US). **MELLOTT, Michael, L.**; 4262 Woodmere, Youngstown, OH 44515 (US). **JANIS, Jeffrey, A.**; 101 Eastwind Drive NE, Warren, OH 44484 (US). **TAYLOR, Bruce, D.**; 3805 Ridge Road, Cortland, OH 44410 (US). **RAGALYI, Steven, P.**; 3636 Bradley Brownlee, Cortland, OH 44410 (US). **HANTON, Christopher, D.**; 236 Fox Run, Cortland, OH 44410 (US). **LUI, Hoi**; 7943 Raglan Drive, Warren, OH 44484 (US).

(74) Agent: **MYERS, Robert, J.**; Delphi Technologies, LLC, P.O. Box 5052, M/C: 483-400-402, Troy, MI 48007-5052 (US).

(81) Designated States *(unless otherwise indicated, for every kind of national protection available)*: AE, AG, AL, AM,

(54) Title: SHIELDED ELECTRICAL CONNECTOR ASSEMBLY AND METHOD OF MANUFACTURING SAME

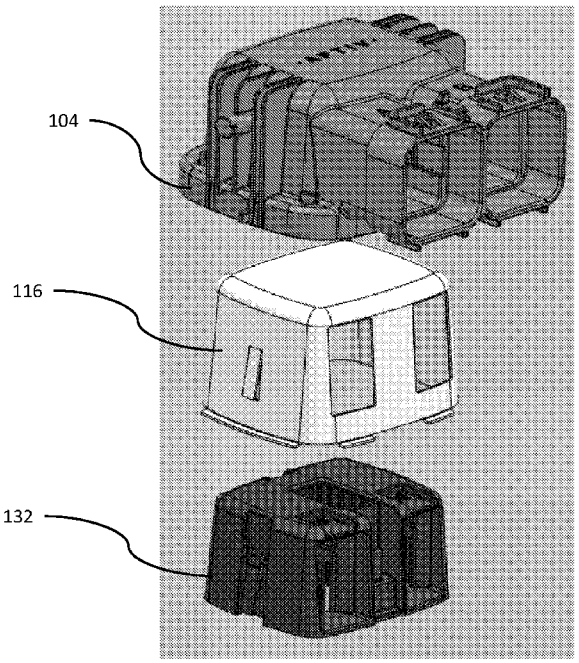

Fig. 2

(57) Abstract: A shielded electrical connector assembly (100) includes an electromagnetic shield (116) integrally formed from a single sheet (120) of conductive material. The shield (116) has a main wall (122) and four side walls (124) surrounding the main wall (122). The shield (116) defines an opening (126) opposite the main wall (122) having an opening perimeter that is greater than or equal to a main wall perimeter. One of the four side walls (128) defines at least one side wall opening (130) that is configured to receive a shielded wire cable. A method (400) of manufacturing the shielded electrical connector assembly (100) includes the steps of providing a single planar sheet (120) of conductive material, providing a die (344) and a punch (346), forming the sheet (120) into a cupped shape having a main wall (122) and four side walls (124) surrounding the main wall (122) using the die (344) and the punch (346), and forming a side wall opening (130) in one of the four side walls (128).

WO 2019/027730 A1

[Continued on next page]

AO, AT, AU, AZ, BA, BB, BG, BH, BN, BR, BW, BY, BZ, CA, CH, CL, CN, CO, CR, CU, CZ, DE, DJ, DK, DM, DO, DZ, EC, EE, EG, ES, FI, GB, GD, GE, GH, GM, GT, HN, HR, HU, ID, IL, IN, IR, IS, JO, JP, KE, KG, KH, KN, KP, KR, KW, KZ, LA, LC, LK, LR, LS, LU, LY, MA, MD, ME, MG, MK, MN, MW, MX, MY, MZ, NA, NG, NI, NO, NZ, OM, PA, PE, PG, PH, PL, PT, QA, RO, RS, RU, RW, SA, SC, SD, SE, SG, SK, SL, SM, ST, SV, SY, TH, TJ, TM, TN, TR, TT, TZ, UA, UG, US, UZ, VC, VN, ZA, ZM, ZW.

(84) Designated States *(unless otherwise indicated, for every kind of regional protection available)*: ARIPO (BW, GH, GM, KE, LR, LS, MW, MZ, NA, RW, SD, SL, ST, SZ, TZ, UG, ZM, ZW), Eurasian (AM, AZ, BY, KG, KZ, RU, TJ, TM), European (AL, AT, BE, BG, CH, CY, CZ, DE, DK, EE, ES, FI, FR, GB, GR, HR, HU, IE, IS, IT, LT, LU, LV, MC, MK, MT, NL, NO, PL, PT, RO, RS, SE, SI, SK, SM, TR), OAPI (BF, BJ, CF, CG, CI, CM, GA, GN, GQ, GW, KM, ML, MR, NE, SN, TD, TG).

Published:

— *with international search report (Art. 21(3))*

SHIELDED ELECTRICAL CONNECTOR ASSEMBLY AND METHOD OF MANUFACTURING SAME

CROSS-REFERENCE TO RELATED APPLICATION

[0001] This application claims the benefit under Article 8 of the Patent Cooperation Treaty of U.S. Provisional Patent Application No. 62/539,656 filed on August 1, 2017, the entire disclosure of which is hereby incorporated by reference.

TECHNICAL FIELD OF THE INVENTION

[0002] The invention relates to an electrical connector assembly, particularly to a shielded electrical connector assembly that is capable of carrying current in excess of 200 amperes and a method of manufacturing such an electrical connector assembly.

BRIEF DESCRIPTION OF THE SEVERAL VIEWS OF THE DRAWING

[0003] The present invention will now be described, by way of example with reference to the accompanying drawings, in which:

[0004] Fig. 1 is a perspective view of a shielded electrical connector assembly according to an embodiment of the invention;

[0005] Fig. 2 is an exploded perspective view of the shielded electrical connector assembly of Fig. 1 including an electromagnetic shield according to an embodiment of the invention;

[0006] Fig. 3 is a perspective view of the preformed electromagnetic shield of Fig. 2 according to an embodiment of the invention;

[0007] Fig. 4 is a perspective view of the formed electromagnetic shield of Fig. 3 according to an embodiment of the invention;

[0008] Fig. 5 is a perspective view of an alternate electromagnetic shield of the shielded electrical connector assembly of Fig. 1 according to an embodiment of the invention;

[0009] Fig. 6 is a perspective view of an alternate shielded electrical connector assembly according to an embodiment of the invention;

[0010] Fig. 7 is an isolated perspective view of an alternative preformed electromagnetic shield according to an embodiment of the invention;

[0011] Fig. 8 is an isolated perspective view of electromagnetic shield of Fig. 7 in an intermediate forming step according to an embodiment of the invention;

[0012] Fig. 9 is an isolated perspective view of electromagnetic shield of Fig. 7 after forming according to an embodiment of the invention; and

[0013] Fig. 10 is a flow chart of a method of manufacturing a shielded electrical connector assembly according to an embodiment of the invention.

DETAILED DESCRIPTION OF THE INVENTION

[0014] Reference will now be made in detail to embodiments, examples of which are illustrated in the accompanying drawings. In the following detailed description, numerous specific details are set forth in order to provide a thorough understanding of the various described embodiments. However, it will be apparent to one of ordinary skill in the art

that the various described embodiments may be practiced without these specific details. In other instances, well-known methods, procedures, components, circuits, and networks have not been described in detail so as not to unnecessarily obscure aspects of the embodiments.

[0015] Presented herein is a sealed electrical connector assembly that is suited for robustly, reliably, and safely carrying electrical currents greater than 200 amperes.

[0016] Fig. 1 illustrates an embodiment of a shielded electrical connector assembly, hereinafter referred to as the assembly 100, that includes a female connector 102 having a female connector housing or body 104 containing a pair of socket terminals (not shown) connected to a pair of shielded wire cables 106. The assembly 100 also includes a male connector 108 having a male connector housing or body 110 containing a pair of blade terminals 112 that interconnect with the socket terminals in the female connector body 104. The assembly 100 also includes a connection assist lever 114. This assembly 100 may be suited for high power electrical connections, such as those required in an electrified vehicle powertrain. The female and male connector bodies 104, 110 are formed of an electrically insulative, i.e. dielectric, material, such as an engineered polymer. The socket terminals and blade terminals 112 are formed of an electrically conductive maters, such as a copper alloy. The shielded cables each have a central conductor, such as stranded copper wire cable, supported by a polymeric inner insulator jacket. The inner jacket of each cable is surrounded by a shield conductor, such as a braided copper wire sleeve, that is surrounded by a polymeric outer insulator jacket

[0017] As shown in Fig. 2, the female connector 102 includes an electromagnetic shield, hereinafter referred to as the shield 116, that is received within a connector cavity 118 (see Fig. 6) defined by the female connector body 104. The shield 116 is electrically connected to the shield conductors of the shielded wire cables 106 and surrounds at least a portion of the interface between the socket terminals and blade terminals 112. In the embodiment illustrated in Fig. 2, the shield 116 is formed of a thin conductive foil, such as an aluminum foil having a thickness of less than 0.38 millimeters (about 0.015 inches).

[0018] As shown in Fig. 3, the shield 116 is integrally formed from a planar sheet 120 of foil that is cut, e.g. blanked, to the desired shape so that after the sheet 120 is shaped, the shield 116 is characterized as having a main wall 122 and four side walls 124 surrounding the main wall 122 as illustrated in Fig. 4. The shield 116 defines an opening 126 opposite the main wall 122 having an opening perimeter that is greater than or equal to a main wall perimeter. One of the four side walls 124, e.g. a front side wall 128 defines a pair of side wall openings 130 that are configured to receive the pair of shielded wire cables 106. The foil sheet 120 may be fashioned into the shape of the shield 116 using a die and punch. The thin foil shield 116 provides the benefit of lower cost tooling and easier forming processes than prior art shields made from thicker sheet metal that required progressive dies to obtain the desired shape.

[0019] Returning to Fig. 2, the female connector 102 also includes a shield support structure, hereinafter referred to as the support 132, that is received within a shield cavity 134 formed by the main wall 122 and the four side walls 124. The support 132 is formed of an electrically insulative, i.e. dielectric, material, such as an engineered polymer. The support 132 is characterized as having a main wall and four side walls surrounding the

main wall 122 as illustrated in Fig. 2. The support defines an opening opposite the main wall. A front side wall of the support 132 defines a pair of side wall openings that are configured to receive the pair of shielded wire cables 106. The support further defines a support cavity between the main wall and the four side walls in which the blade and socket terminal interface is disposed.

[0020] The support 132 enhances the rigidity of the shield 116 to allow the thin foil shield 116 to be handled without deforming or damaging the shield 116. The support 132 also provides the benefit of electrically insulating the shield 116 from the terminals, thereby preventing a short circuit between the terminals and the grounded shield 116. The support 132 may be used with a forming die during the process of forming the shield 116, wherein the support 132 serves as a punch to shape the sheet 120 into the desired shape of the shield 116. As shown in Fig. 4, the side walls 124 of the shield 116 define a plurality of tabs 136 around the opening 126 that are folded over the support 132 to secure the shield 116 to the support 132. The support 132 may also be used to insert the shield 116 into the connector cavity 118.

[0021] As shown in Fig. 5, the shield 116 may include shield extensions 138 that fit within the pair of side wall openings 130 to provide additional shielding along the shielded wire cables 106 within the connector cavity 118. These shield extensions 138 can be formed of sheet metal using less complex progressive die stamping.

[0022] Fig. 6 illustrates an alternative shield construction in which the shield 216 is formed from sheet meal that is deep drawn into the desired shape having a main wall 222 and four side walls 224 surrounding the main wall 222, wherein the shield 216 defines an

opening 226 opposite the main wall 222 having an opening perimeter that is greater than or equal to a main wall perimeter. The shield 216 also includes a clamp 240 that secures shield conductors of the shielded wire cables 106 to the shield 216, e.g. by a threaded fastener 242. This shield 216 provides the benefit of eliminating seams between the side walls 224.

[0023] Figs. 7 to 9 illustrate yet another alternative shield construction in which the shield 316 is formed from a sheet 320 of expanded metal mesh or screen, such as expanded aluminum. The sheet 320 of expanded aluminum is formed using a die 344 and a punch 346 into the desired shape having a main wall 322 and four side walls 324 surrounding the main wall 322, wherein the shield 316 defines an opening 326 opposite the main wall 322 having an opening perimeter that is greater than or equal to a main wall perimeter. After removal from the die 344, the shield 316 is trimmed and the pair of side wall openings 330 is cut in the front side wall 328. The support 132 may be used to enhance the rigidity of the shield 316 to allow the shield 316 to be handled without deforming or damaging the shield 316. The support 132 may serve as the punch 346 to shape the expanded aluminum sheet 320 into the desired shape of the shield 316. This shield 316 also provides the benefit of eliminating seams between the side walls 324.

[0024] Fig. 10 illustrates a method 400 of manufacturing the assembly 100. The method 400 includes the following steps:

[0025] STEP 410, PROVIDE A SHEET OF CONDUCTIVE MATERIAL, includes providing a single planar sheet 120 of conductive material, such as a sheet of aluminum foil.

[0026] STEP 412, PROVIDE A DIE AND A PUNCH, includes providing a die 344 and a punch 346 configured to form the sheet 120 into the desired shape of the shield 116.

[0027] STEP 414, PROVIDE A CONNECTOR HOUSING DEFINING A CONNECTOR CAVITY, includes providing the female connector housing 104 defining the connector cavity 118.

[0028] STEP 416, PROVIDE A SHIELD SUPPORT STRUCTURE, includes providing the support 132.

[0029] STEP 418, FORM THE SHEET INTO A CUPPED SHAPE HAVING A MAIN WALL AND FOUR SIDE WALLS, includes forming the sheet 120 into a cupped shape having a main wall 122 and four side walls 124 surrounding the main wall 122 using the die 344 and the punch 346. The cupped shape defines an opening 126 opposite the main wall 122 having an opening perimeter that is greater than or equal to a main wall perimeter.

[0030] STEP 420, FORM A SIDE WALL OPENING IN ONE OF THE FOUR SIDE WALLS, includes forming at least one side wall opening in one of the four side walls 124.

[0031] STEP 422, DISPOSE THE SHIELD WITHIN THE CONNECTOR CAVITY, includes disposing the shield 116 within the connector cavity 118.

[0032] STEP 424, DISPOSE THE SHIELD SUPPORT STRUCTURE WITHIN A SHIELD CAVITY FORMED BY THE MAIN WALL AND THE FOUR SIDE WALLS,

includes disposing the support 132 within a shield cavity 134 formed by the main wall 122 and the four side walls 124. STEP 424, DISPOSE THE SHIELD SUPPORT STRUCTURE WITHIN A SHIELD CAVITY FORMED BY THE MAIN WALL AND THE FOUR SIDE WALLS, may be performed simultaneously with STEP 418, FORM THE SHEET INTO A CUPPED SHAPE HAVING A MAIN WALL AND FOUR SIDE WALLS when the support is used as the punch 346.

[0033] As presented herein, a shielded electrical connector assembly 100 and a method 400 of manufacturing this shielded electrical connector assembly 100 is provided. The assembly 100 and the method 400 provide the benefits of reduced manufacturing cost because the sheet 120 may be blanked and formed into the shield 116 in two processes requiring only two workstations. Softer, lower cost metal foil or expanded metal can be used for the shield 116 because it is mechanically supported by the support 132 and may be immediately inserted into the connector cavity 118 where it is protected from handling damage.

[0034] While this invention has been described in terms of the preferred embodiments thereof, it is not intended to be so limited, but rather only to the extent set forth in the claims that follow. For example, the above-described embodiments (and/or aspects thereof) may be used in combination with each other. In addition, many modifications may be made to configure a particular situation or material to the teachings of the invention without departing from its scope. Dimensions, types of materials, orientations of the various components, and the number and positions of the various components described herein are intended to define parameters of certain embodiments, and are by no means limiting and are merely prototypical embodiments.

[0035] Many other embodiments and modifications within the spirit and scope of the claims will be apparent to those of skill in the art upon reviewing the above description. The scope of the invention should, therefore, be determined with reference to the following claims, along with the full scope of equivalents to which such claims are entitled.

[0036] As used herein, 'one or more' includes a function being performed by one element, a function being performed by more than one element, e.g., in a distributed fashion, several functions being performed by one element, several functions being performed by several elements, or any combination of the above.

[0037] It will also be understood that, although the terms first, second, etc. are, in some instances, used herein to describe various elements, these elements should not be limited by these terms. These terms are only used to distinguish one element from another. For example, a first contact could be termed a second contact, and, similarly, a second contact could be termed a first contact, without departing from the scope of the various described embodiments. The first contact and the second contact are both contacts, but they are not the same contact.

[0038] The terminology used in the description of the various described embodiments herein is for the purpose of describing particular embodiments only and is not intended to be limiting. As used in the description of the various described embodiments and the appended claims, the singular forms "a", "an" and "the" are intended to include the plural forms as well, unless the context clearly indicates otherwise. It will also be understood that the term "and/or" as used herein refers to and encompasses any and all possible

combinations of one or more of the associated listed items. It will be further understood that the terms "includes," "including," "comprises," and/or "comprising," when used in this specification, specify the presence of stated features, integers, steps, operations, elements, and/or components, but do not preclude the presence or addition of one or more other features, integers, steps, operations, elements, components, and/or groups thereof.

[0039] As used herein, the term "if" is, optionally, construed to mean "when" or "upon" or "in response to determining" or "in response to detecting," depending on the context. Similarly, the phrase "if it is determined" or "if [a stated condition or event] is detected" is, optionally, construed to mean "upon determining" or "in response to determining" or "upon detecting [the stated condition or event]" or "in response to detecting [the stated condition or event]," depending on the context.

[0040] Additionally, while terms of ordinance or orientation may be used herein these elements should not be limited by these terms. All terms of ordinance or orientation, unless stated otherwise, are used for purposes distinguishing one element from another, and do not denote any particular order, order of operations, direction or orientation unless stated otherwise.

WE CLAIM:

1. A shielded electrical connector assembly (100), comprising:

an electromagnetic shield (116) integrally formed from a single sheet (120) of conductive material, said shield (116) having a main wall (122) and four side walls (124) surrounding the main wall (122), said shield (116) defining an opening (126) opposite the main wall (122) having an opening perimeter that is greater than or equal to a main wall perimeter, wherein one of the four side walls (128) defines a side wall opening (130) configured to receive a shielded wire cable (106).

2. The shielded electrical connector assembly (100) according to claim 1, wherein the shield (116) is formed from a planar sheet (120).

3. The shielded electrical connector assembly (100) according to claim 1 or 2, wherein the planar sheet (120) is a metallic foil having a thickness of less than 0.38 millimeters.

4. The shielded electrical connector assembly (100) according to claim 1 or 2, wherein the planar sheet (120) is a formed of an expanded metal sheet.

5. The shielded electrical connector assembly (100) according to claim 4, wherein the planar sheet (120) is a formed of an expanded aluminum sheet (320).

6. The shielded electrical connector assembly (100) according any of the one of the preceding claims, further comprising:

a connector housing (104) defining a connector cavity (118) in which the shield (116) is received; and

a shield support structure (132) received within a shield cavity (134) formed by the main wall (122) and the four side walls (124).

7. The shielded electrical connector assembly (100) according to claim 6, wherein the connector housing (104) is formed of a dielectric material.

8. The shielded electrical connector assembly (100) according to claim 6 or 7, wherein the shield support structure (132) is formed of a dielectric material.

9. The shielded electrical connector assembly (100) according to any one of the claims 6 to 8, wherein the sheet (120) is formed by the shield support structure (132).

10. The shielded electrical connector assembly (100) according to any one of the preceding claims, wherein the one of the four side walls (128) defines a pair of side wall openings (130), each configured to receive one shielded wire cable (106) of a pair of shield wire cables.

11. A method (400) of manufacturing a shielded electrical connector assembly (100), comprising the steps of:

providing (410) a single planar sheet (120) of conductive material;

providing (412) a die (344) and a punch (346);

forming (418) the sheet (120) into a cupped shape having a main wall (122) and four side walls (124) surrounding the main wall (122) using the die (344) and the punch (346), said cupped shape defining an opening (126) opposite the main wall (122) having an opening perimeter that is greater than or equal to a main wall perimeter; and

forming (420) a side wall opening (130) in one of the four side walls (128).

12. The method (400) according to claim 11, wherein the planar sheet (120) is a metallic foil having a thickness of less than 0.38 millimeters.

13. The method (400) according to claim 11, wherein the planar sheet (120) is a formed of an expanded metal sheet.

14. The method (400) according to claim 13, wherein the planar sheet (120) is a formed of an expanded aluminum sheet (320).

15. The method (400) according to any of the one of the claims 11 to 14, further comprising the steps of:

providing (414) a connector housing (104) defining a connector cavity (118);

disposing (422) the shield (116) within the connector cavity (118);

providing (416) a shield support structure (132); and

disposing (424) the shield support structure (132) within a shield cavity (134) formed by the main wall (122) and the four side walls (124).

16. The method (400) according to claim 15, wherein the step (424) of disposing the shield support structure (132) within the shield cavity (134) is performed simultaneously with the step (418) of forming the sheet (120) into the cupped shape.

17. A shielded electrical connector assembly (100) manufactured by a process (400) comprising the steps of:

providing (410) a single planar sheet (120) of conductive material;

providing (412) a die (344) and a punch (346);

forming (418) the sheet (120) into a cupped shape having a main wall (122) and four side walls (124) surrounding the main wall (122) using the die (344) and the punch (346), said cupped shape defining an opening (126) opposite the main wall (122) having an opening perimeter that is greater than or equal to a main wall perimeter; and

forming (420) a side wall opening (130) in one of the four side walls (128).

18. The shielded electrical connector assembly (100) according to claim 17, wherein the process (400) further comprises the steps of:

providing (414) a connector housing (104) defining a connector cavity (118);

disposing (422) the shield (116) within the connector cavity (118);

providing (416) a shield support structure (132); and

disposing (424) the shield support structure (132) within a shield cavity (134) formed by the main wall (122) and the four side walls (124).

19. The shielded electrical connector assembly (100) according to claim 18, wherein the step (424) of disposing the shield support structure (132) within the shield cavity (134) is performed simultaneously with the step (418) of forming the sheet (120) into the cupped shape.

20. The shielded electrical connector assembly (100) according to any one of claims 17 to 19, wherein the planar sheet (120) is a metallic foil having a thickness of less than 0.38 millimeters.

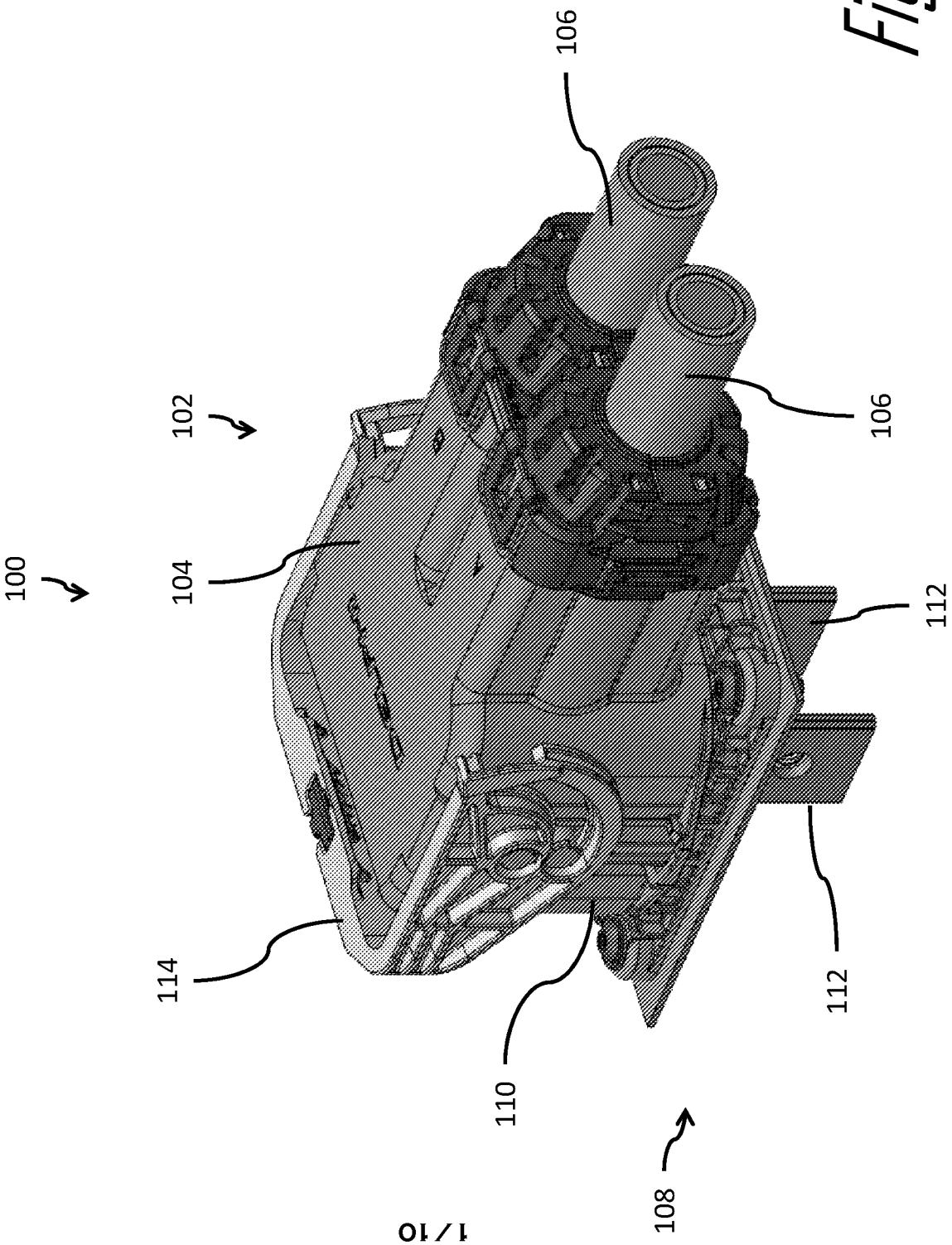

Fig. 1

Fig. 2

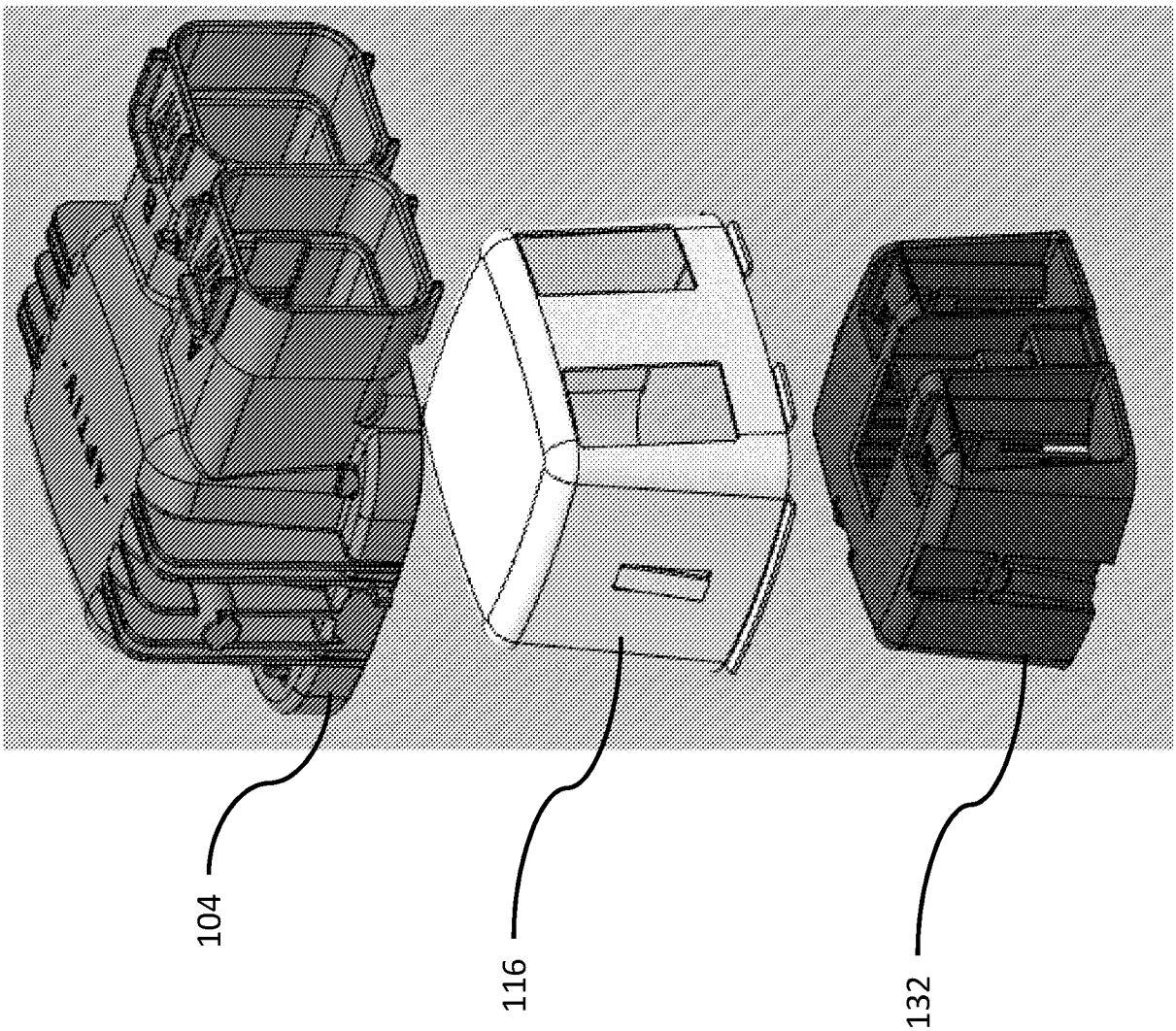

Fig. 3

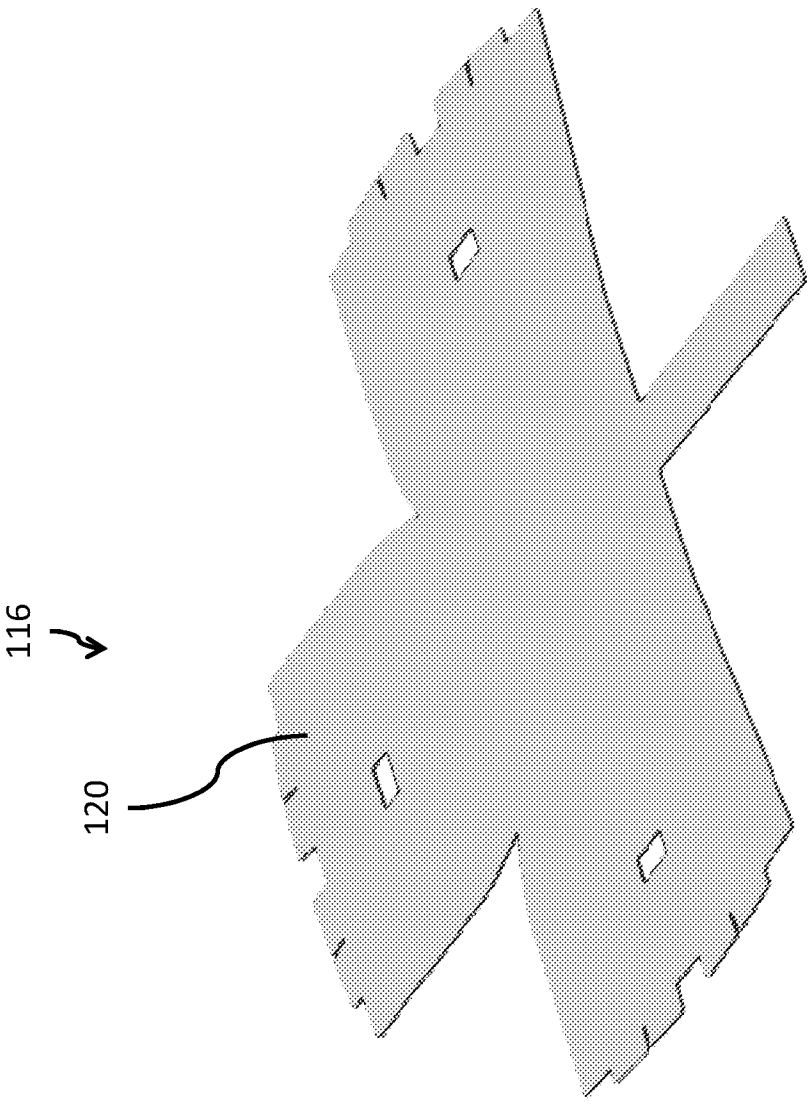

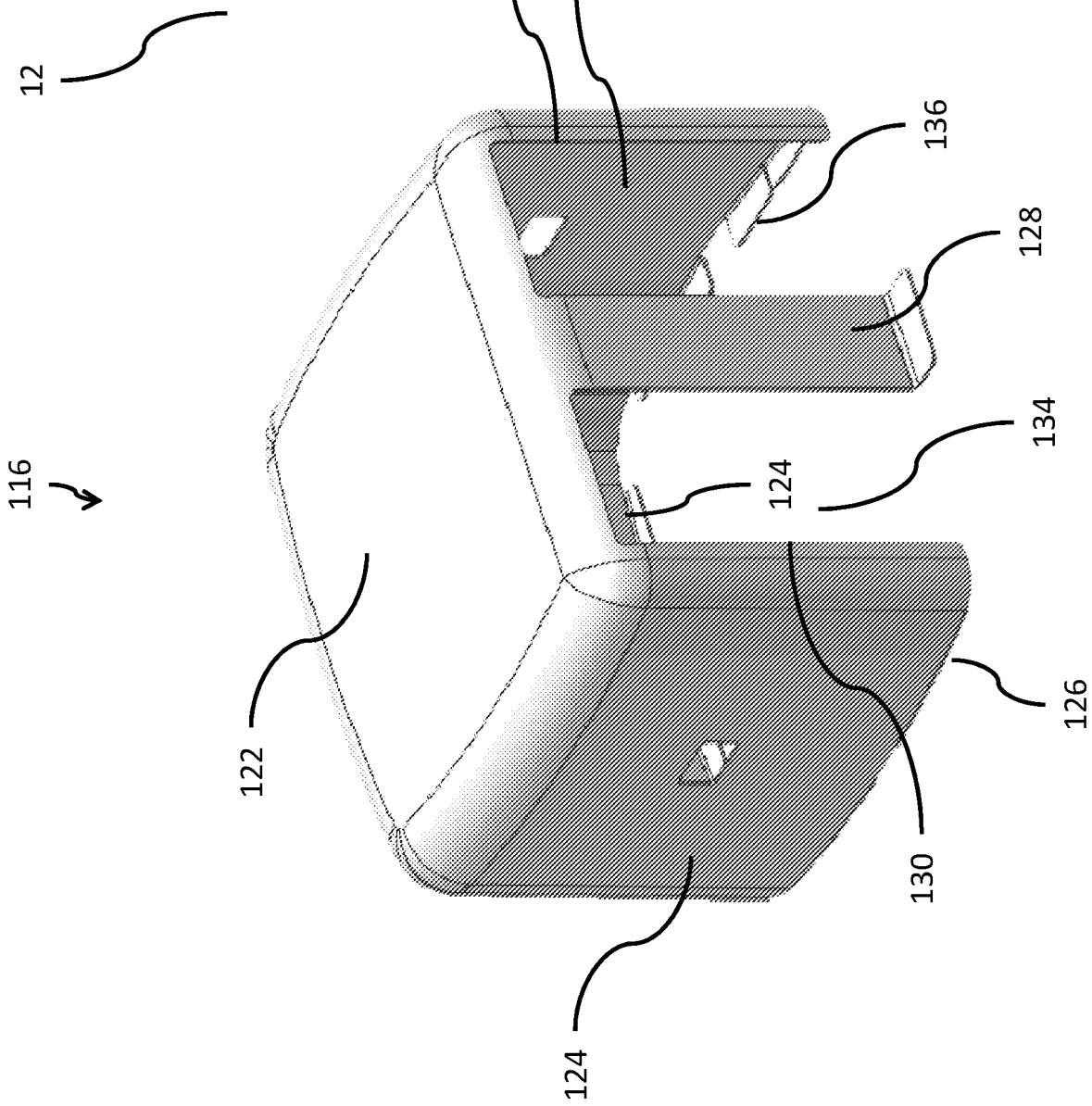

Fig. 4

Fig. 5

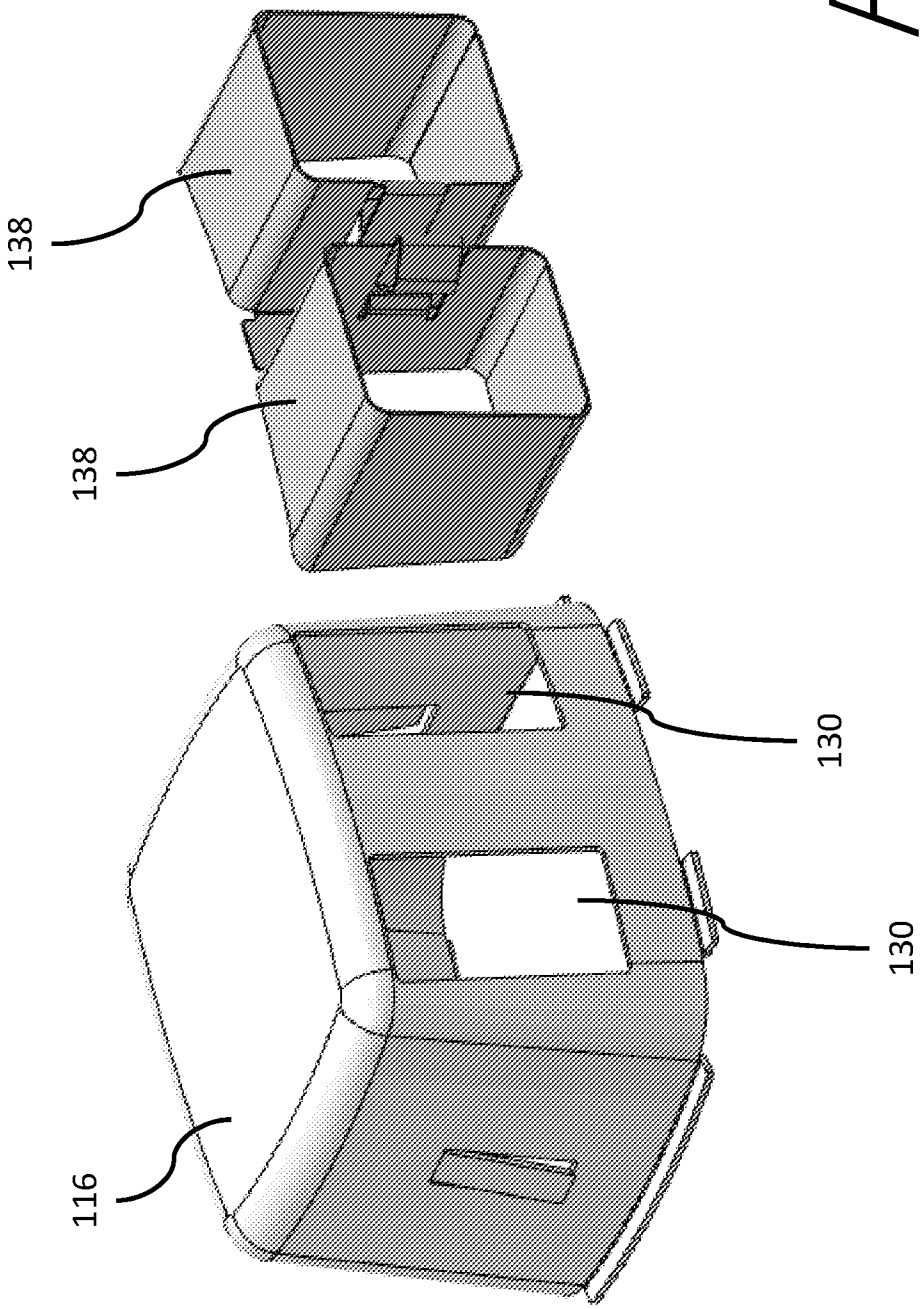

Fig. 6

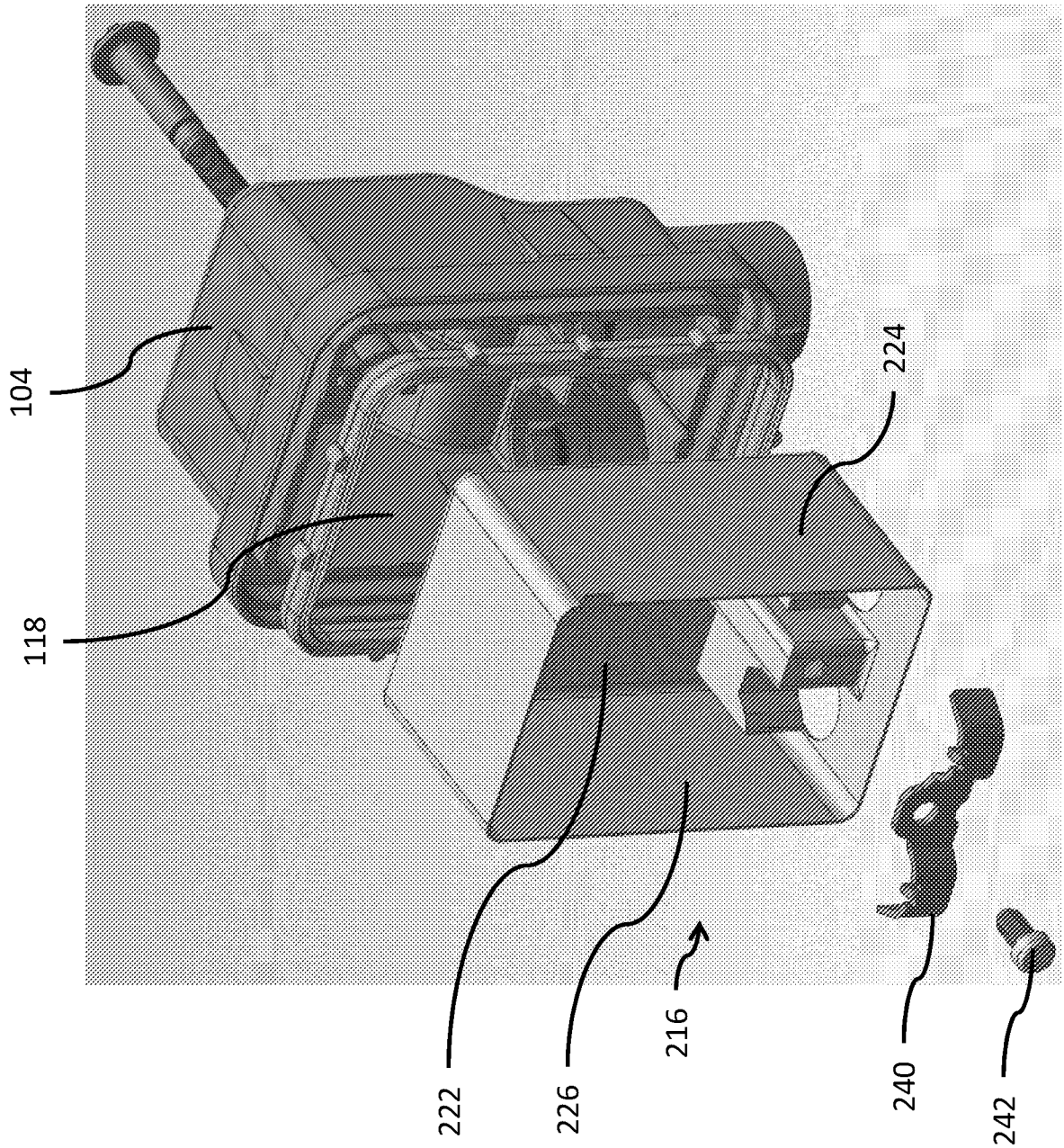

Fig. 7

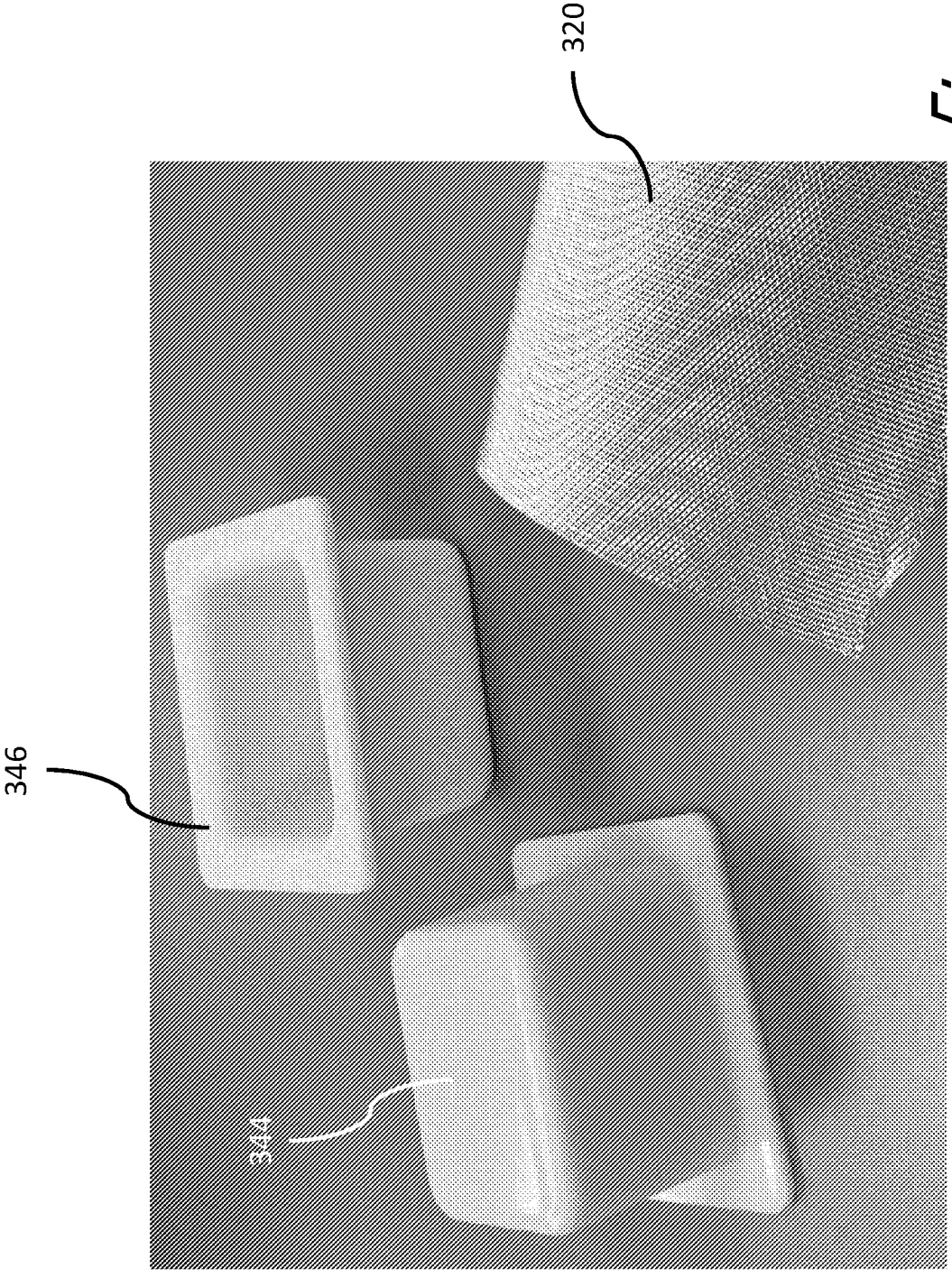

Fig. 8

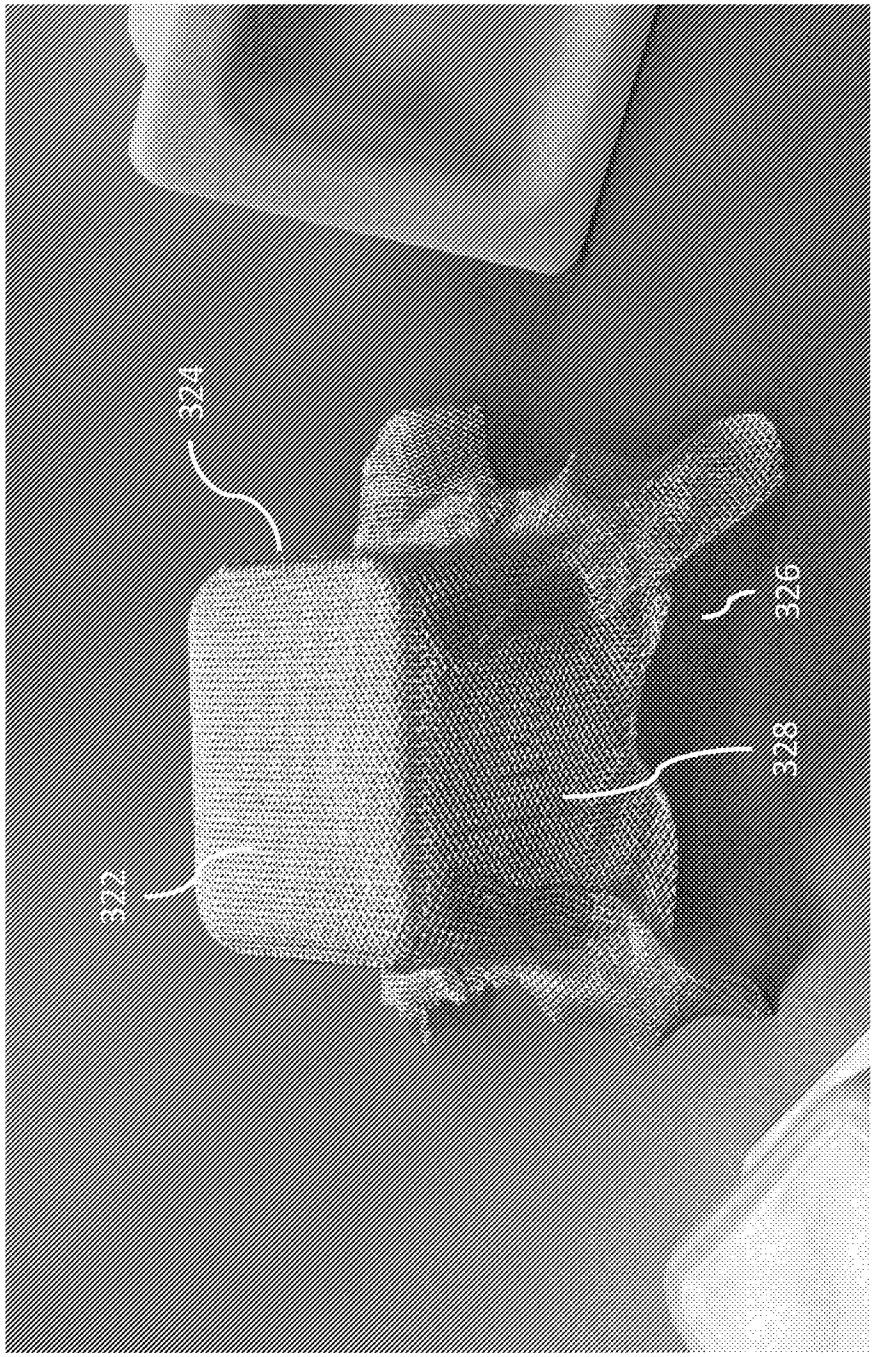

Fig. 9

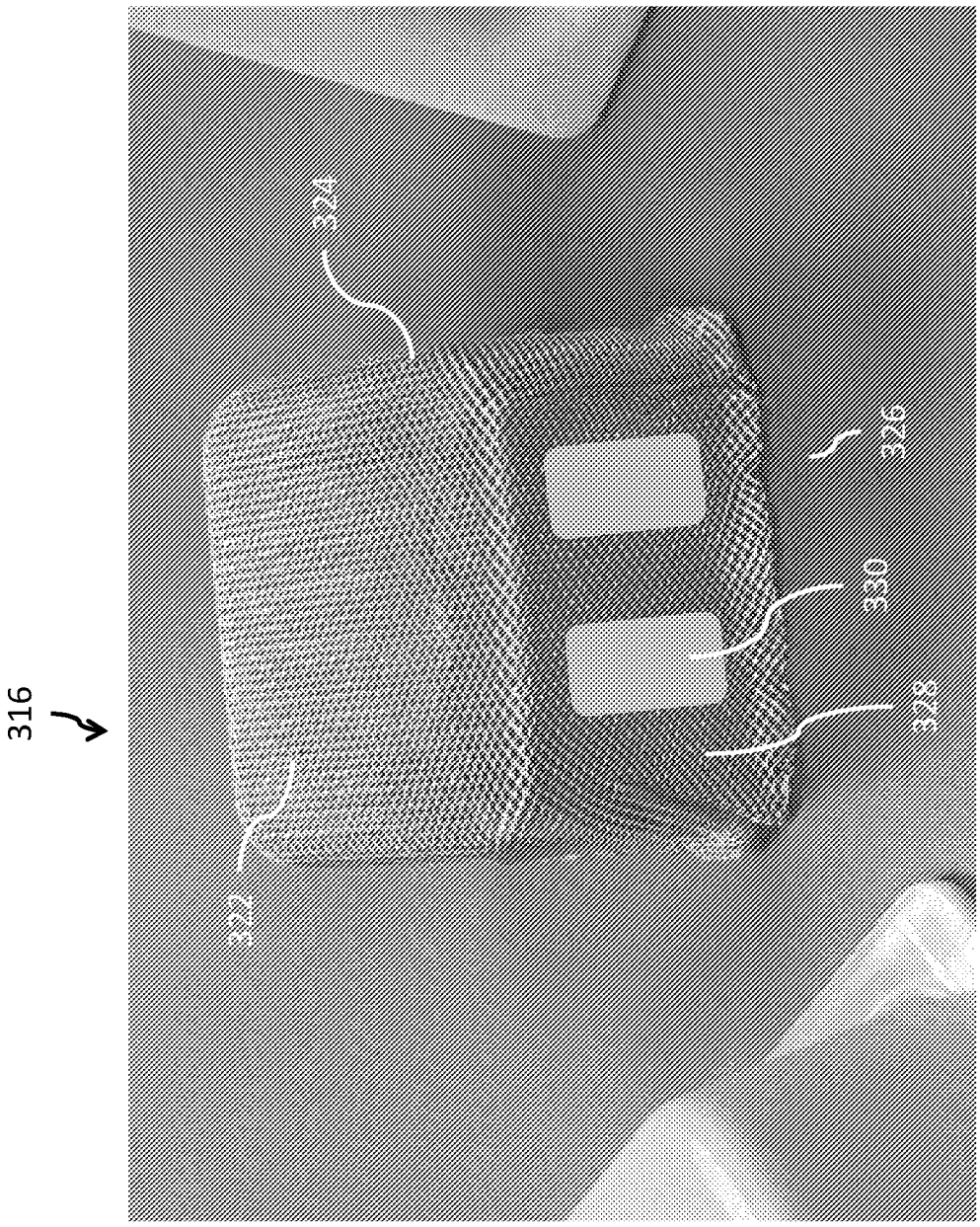

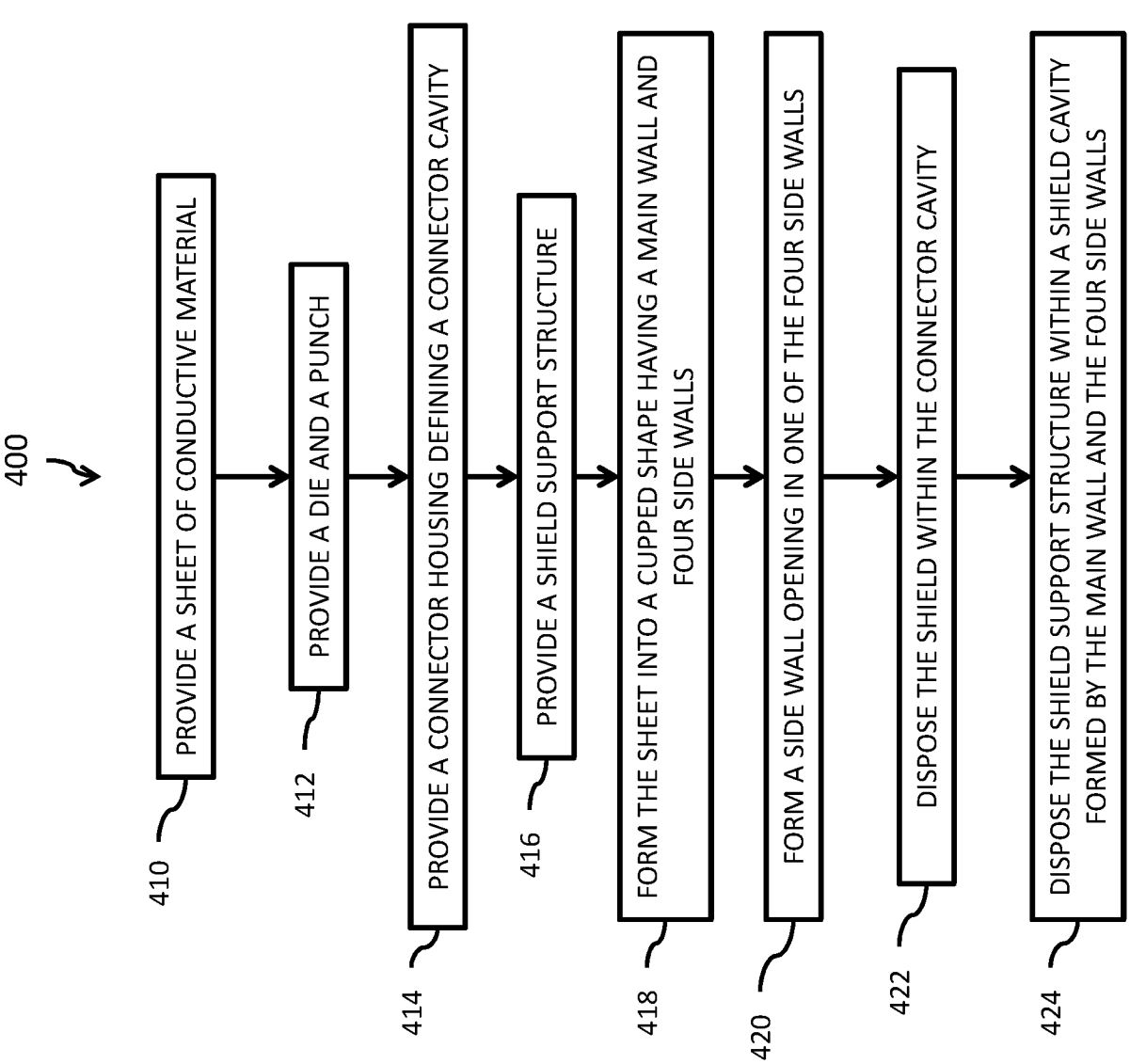
400
PROVIDE A SHEET OF CONDUCTIVE MATERIAL
410
PROVIDE A DIE AND A PUNCH
412
PROVIDE A CONNECTOR HOUSING DEFINING A CONNECTOR CAVITY
414
PROVIDE A SHIELD SUPPORT STRUCTURE
416
FORM THE SHEET INTO A CUPPED SHAPE HAVING A MAIN WALL AND FOUR SIDE WALLS
418
FORM A SIDE WALL OPENING IN ONE OF THE FOUR SIDE WALLS
420
DISPOSE THE SHIELD WITHIN THE CONNECTOR CAVITY
422
DISPOSE THE SHIELD SUPPORT STRUCTURE WITHIN A SHIELD CAVITY FORMED BY THE MAIN WALL AND THE FOUR SIDE WALLS
424

Fig. 10

INTERNATIONAL SEARCH REPORT

International application No.
PCT/US2018/043440

Box No. II Observations where certain claims were found unsearchable (Continuation of item 2 of first sheet)

This international search report has not been established in respect of certain claims under Article 17(2)(a) for the following reasons:

1. ☐ Claims Nos.:
because they relate to subject matter not required to be searched by this Authority, namely:

2. ☒ Claims Nos.: 7
because they relate to parts of the international application that do not comply with the prescribed requirements to such an extent that no meaningful international search can be carried out, specifically:
Claim 7 is not clear, contrary to the requirement of PCT Article 6, because they each refer to a claim which does not comply with PCT Rule 6.4(a)

3. ☒ Claims Nos.: 6 and 8-10
because they are dependent claims and are not drafted in accordance with the second and third sentences of Rule 6.4(a).

Box No. III Observations where unity of invention is lacking (Continuation of item 3 of first sheet)

This International Searching Authority found multiple inventions in this international application, as follows:

1. ☐ As all required addtional search fees were timely paid by the applicant, this international search report covers all searchable claims.

2. ☐ As all searchable claims could be searched without effort justifying an additional fees, this Authority did not invite payment of any additional fees.

3. ☐ As only some of the required additional search fees were timely paid by the applicant, this international search report covers only those claims for which fees were paid, specifically claims Nos.:

4. ☐ No required additional search fees were timely paid by the applicant. Consequently, this international search report is restricted to the invention first mentioned in the claims; it is covered by claims Nos.:

Remark on Protest

☐ The additional search fees were accompanied by the applicant's protest and, where applicable, the payment of a protest fee.
☐ The additional search fees were accompanied by the applicant's protest but the applicable protest fee was not paid within the time limit specified in the invitation.
☐ No protest accompanied the payment of additional search fees.

INTERNATIONAL SEARCH REPORT

International application No.
PCT/US2018/043440

A. CLASSIFICATION OF SUBJECT MATTER

H01R 13/648(2006.01)i, H01R 43/16(2006.01)i

According to International Patent Classification (IPC) or to both national classification and IPC

B. FIELDS SEARCHED

Minimum documentation searched (classification system followed by classification symbols)
H01R 13/648; B21D 22/26; B21D 5/01; H01R 17/04; H01R 17/12; H01R 9/03; H01R 43/16

Documentation searched other than minimum documentation to the extent that such documents are included in the fields searched
Korean utility models and applications for utility models
Japanese utility models and applications for utility models

Electronic data base consulted during the international search (name of data base and, where practicable, search terms used)
eKOMPASS(KIPO internal) & Keywords: shield, metal sheet, foil, die, punch

C. DOCUMENTS CONSIDERED TO BE RELEVANT

Category*	Citation of document, with indication, where appropriate, of the relevant passages	Relevant to claim No.
X	US 2003-0232539 A1 (LI-SEN CHEN et al.) 18 December 2003 See paragraphs [0023]-[0030], claim 1 and figures 1-2.	1
Y		2-5,11-20
Y	US 2016-0375477 A1 (NIPPON STEEL & SUMITOMO METAL CORPORATION) 29 December 2016 See paragraphs [0119]-[0140], claims 1-3 and figures 5-7.	2-5,11-20
A	JP 11-195458 A (HIROSE ELECTRIC CO., LTD.) 21 July 1999 See paragraphs [0011]-[0014], claims 1-3 and figures 1-5.	1-5,11-20
A	US 7001216 B1 (HUANG-CHOU HUANG) 21 February 2006 See column 2, lines 4-45 and figures 1-2.	1-5,11-20
A	US 2013-0149902 A1 (KAZUHIKO TSUCHIYA) 13 June 2013 See paragraphs [0054]-[0078], claim 1 and figures 1-3.	1-5,11-20

☐ Further documents are listed in the continuation of Box C.

☒ See patent family annex.

* Special categories of cited documents:
"A" document defining the general state of the art which is not considered to be of particular relevance
"E" earlier application or patent but published on or after the international filing date
"L" document which may throw doubts on priority claim(s) or which is cited to establish the publication date of another citation or other special reason (as specified)
"O" document referring to an oral disclosure, use, exhibition or other means
"P" document published prior to the international filing date but later than the priority date claimed
"T" later document published after the international filing date or priority date and not in conflict with the application but cited to understand the principle or theory underlying the invention
"X" document of particular relevance; the claimed invention cannot be considered novel or cannot be considered to involve an inventive step when the document is taken alone
"Y" document of particular relevance; the claimed invention cannot be considered to involve an inventive step when the document is combined with one or more other such documents,such combination being obvious to a person skilled in the art
"&" document member of the same patent family

Date of the actual completion of the international search	Date of mailing of the international search report
08 November 2018 (08.11.2018)	**08 November 2018 (08.11.2018)**

Name and mailing address of the ISA/KR
International Application Division
Korean Intellectual Property Office
189 Cheongsa-ro, Seo-gu, Daejeon, 35208, Republic of Korea
Facsimile No. +82-42-481-8578

Authorized officer
KIM, Sung Gon
Telephone No. +82-42-481-8746

Form PCT/ISA/210 (second sheet) (January 2015)

INTERNATIONAL SEARCH REPORT

Information on patent family members

International application No.
PCT/US2018/043440

Patent document cited in search report	Publication date	Patent family member(s)	Publication date
US 2003-0232539 A1	18/12/2003	US 2003-0104727 A1	05/06/2003
		US 6609934 B2	26/08/2003
		US 6705897 B2	16/03/2004
US 2016-0375477 A1	29/12/2016	CA 02932856 A1	02/07/2015
		CA 2932856 C	10/07/2018
		CN 105792956 A	20/07/2016
		CN 105792956 B	08/09/2017
		EP 3088093 A1	02/11/2016
		JP 6037054 B2	30/11/2016
		KR 10-1869177 B1	19/06/2018
		KR 10-2016-0088363 A	25/07/2016
		MX 2016007459 A	08/09/2016
		RU 175980 U1	25/12/2017
		RU 2016125126 A	31/01/2018
		RU 2016125222 A	18/01/2018
		RU 2639820 C1	22/12/2017
		RU 2644490 C2	12/02/2018
		US 0022763 B2	17/07/2018
		WO 2015-098871 A1	02/07/2015
JP 11-195458 A	21/07/1999	JP 3267917 B2	25/03/2002
US 7001216 B1	21/02/2006	None	
US 2013-0149902 A1	13/06/2013	CN 103081251 A	01/05/2013
		CN 103081251 B	17/06/2015
		EP 2613412 A1	10/07/2013
		EP 2613412 A4	08/01/2014
		EP 2613412 B1	11/05/2016
		JP 2012-054050 A	15/03/2012
		JP 5822328 B2	24/11/2015
		US 8915755 B2	23/12/2014
		US 8979584 B2	17/03/2015
		WO 2012-029859 A1	08/03/2012