(No Model.)

2 Sheets—Sheet 1.

V. GALLIEN.

ROTARY DRUM FOR TANNING LEATHER.

No. 590,061. Patented Sept. 14, 1897.

Fig. 1

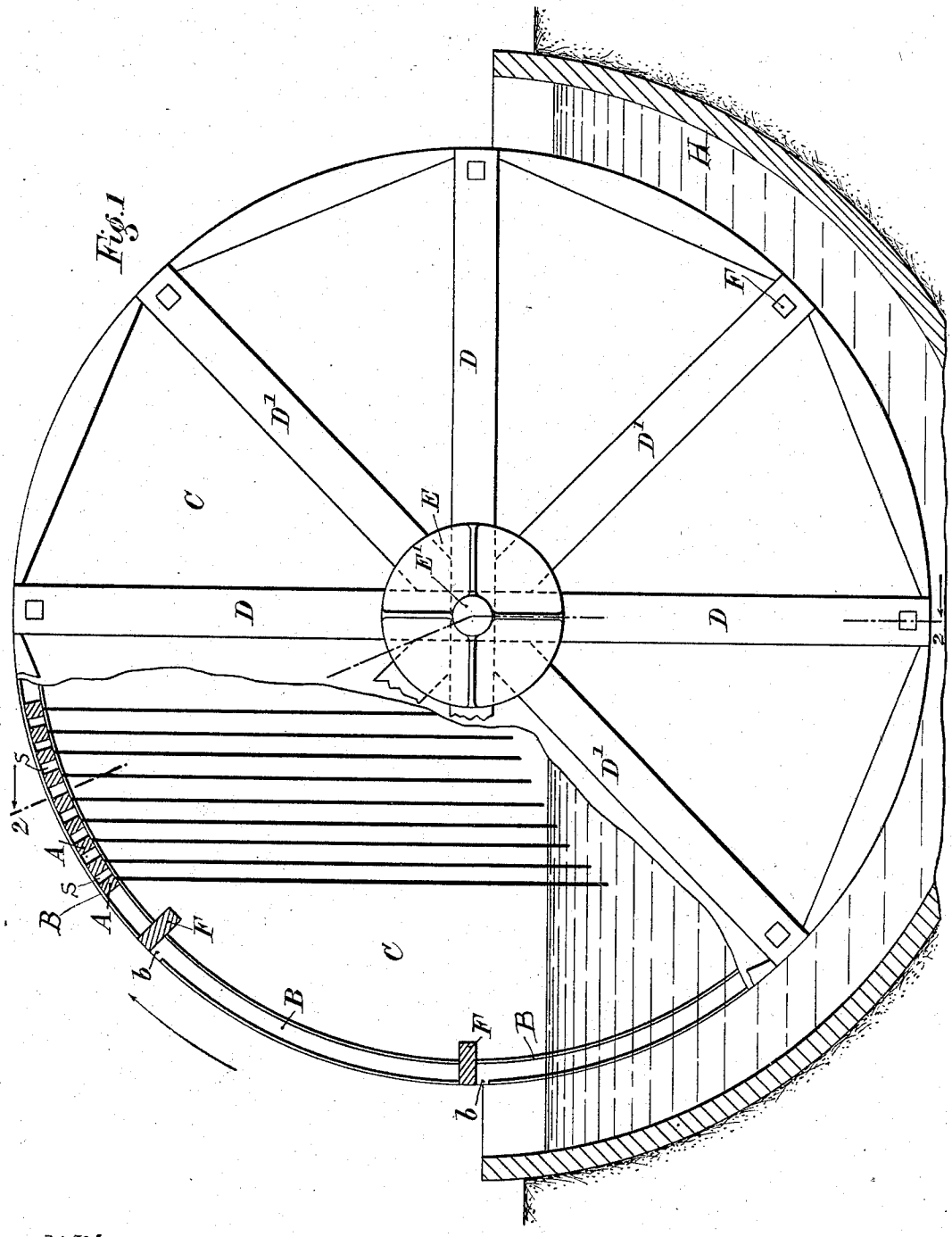

Witnesses:-
M. E. Fletcher.
Fred'k Haynes

Inventor:
Valery Gallien
by attorneys
Brown & Seward

THE NORRIS PETERS CO., PHOTO-LITHO., WASHINGTON, D. C.

(No Model.) 2 Sheets—Sheet 2.

V. GALLIEN.

ROTARY DRUM FOR TANNING LEATHER.

No. 590,061. Patented Sept. 14, 1897.

Fig. 2.

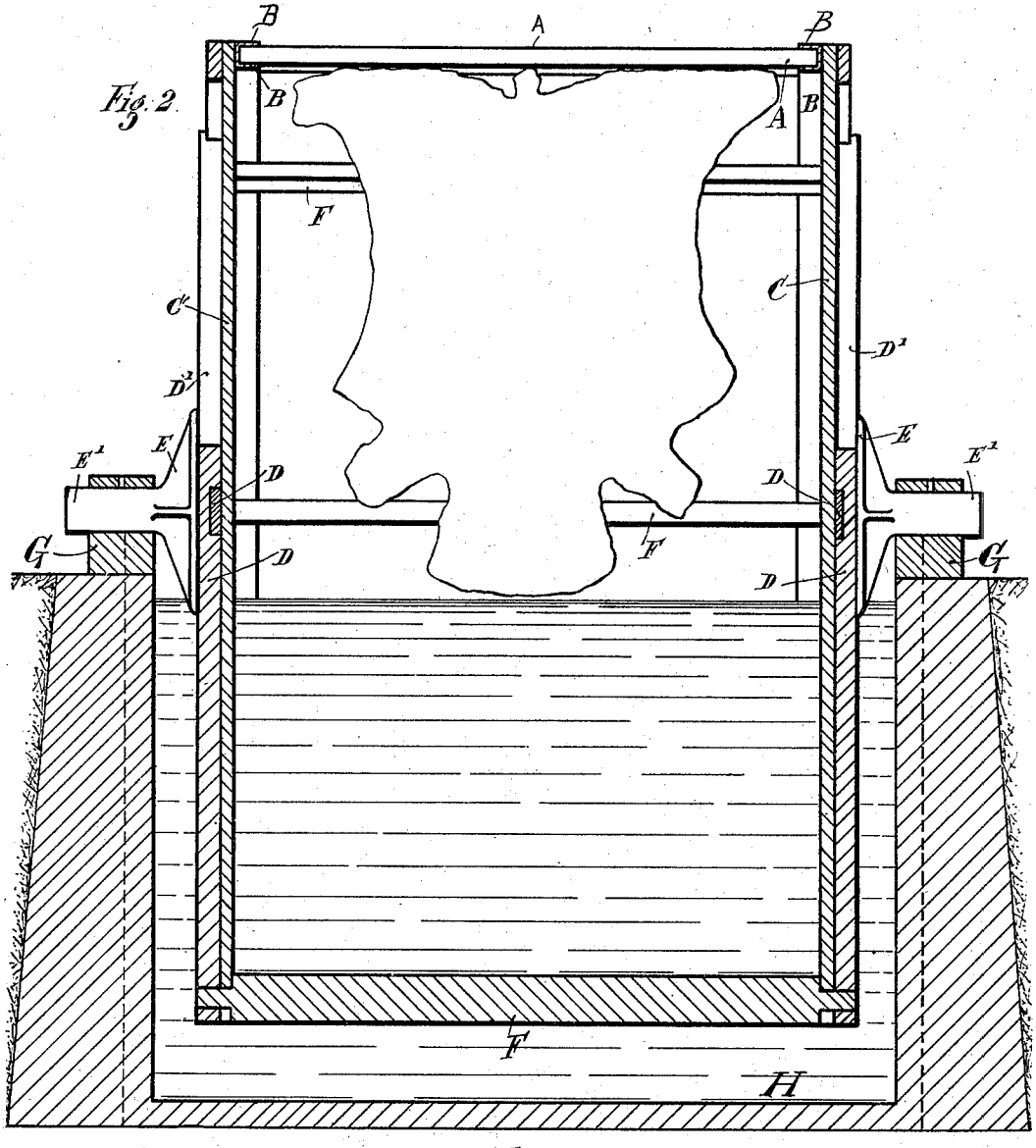

Fig. 3.

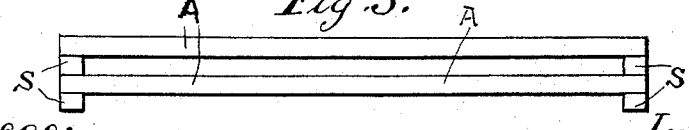

Witnesses:-
M. E. Fletcher
Fred't. Haynes

Inventor
Valery Gallien
by attorneys
Brown & Coward

THE NORRIS PETERS CO., PHOTO-LITHO., WASHINGTON, D. C.

UNITED STATES PATENT OFFICE.

VALERY GALLIEN, OF LONGJUMEAU, FRANCE.

ROTARY DRUM FOR TANNING LEATHER.

SPECIFICATION forming part of Letters Patent No. 590,061, dated September 14, 1897.

Application filed April 30, 1896. Serial No. 589,642. (No model.) Patented in France November 11, 1895, No. 251,592.

To all whom it may concern:

Be it known that I, VALERY GALLIEN, of Longjumeau, in the Republic of France, have invented a new and useful Improvement in Rotary Drums for Tanning Leather, (for which I have obtained a patent in France, No. 251,592, dated November 11, 1895,) of which the following is a specification.

A rotary tanning-drum embodying my invention has no shaft running through it, and hence the center of its interior is clear. It is movable about its axis and partly dips into the reservoir containing the tanning solution. The skins, instead of being left free within the drum, as is the common practice, are attached by one or other of their edges to the interior circumferences of the drum in such manner that in the rotary motion they are successively and throughout all their surfaces isolated from each other, so that the tanning solution may reach them in a uniform manner and so that the inconveniences which result from the squeezing or pressure of the leather in the course of tannage is obviated.

In the accompanying drawings, which illustrate a tanning-drum embodying my invention, Figure 1 represents an end view of the drum, having a portion of the head broken away to show the interior, and also represents a section of the reservoir containing the tanning solution. Fig. 2 represents a central section of the drum and of the reservoir in the line 2 2 of Fig. 1. Fig. 3 represents a longitudinal view of two of the bars on which the skins are suspended in the drum.

The drum is composed of two circular heads permanently united close to their circumferences at suitable intervals by the tie-braces F. The said heads are represented as built up of wooden disks C and attached radial strengthening spokes or braces D D′ of wood running from the center to the circumference, and each head has secured centrally to its exterior a metal hub-plate E, on which is formed one of the two journals E′ of the drum, the said axles being supported in fixed bearings G at the sides of the reservoir H, which contains the tanning solution. Between the tie-braces F there are attached to the interiors of the drum-heads, close to the circumferences thereof, arc-formed channel-plates B, which constitute interrupted sections of two channeled rings for the reception of the ends of a series of square removable bars or ribs A, to which are to be attached by one edge the skins to be tanned. These bars or ribs A form practically the principal portions of the periphery or circumferential part of the drum.

The channel-plates B may be of any suitable metal, as bronze. Their exterior flanges are notched at convenient points, as shown at *b* in Fig. 1, for the insertion and removal of the bars A. The bars are preferably of wood and are separated from each other at proper distances apart by spacing-pieces *s*, provided on one side of each close to the end thereof, as shown in Figs. 1 and 3. The skins may be attached to the bars A by hooks, nails, or other convenient means.

Any convenient means of turning the drum may be applied either to one of its axles or one of its heads, and as it need not make more than about one revolution per minute the power required to turn it will be very small.

To place the bars A with the attached skins in the channel-plates B, I commence by filling one of the sections included between two of the tie-braces F and then fill the diametrically opposite space in such manner as to keep the drum nearly balanced during the filling, and I then proceed in the same way with the opposite intermediate spaces.

When the channel-plates B are filled with bars A, their openings *b* may be closed by any suitable means, as by simply driving a peg or plug thereinto between the last-inserted bar and the adjacent brace F.

The reservoir H having been filled to a suitable depth, say nearly to the axis of the drum, with the tanning solution and rotary motion being given to the drum, the skins are in turn drawn through the solution and withdrawn therefrom. The skins while in the lower part of the drum remain for some time immersed in the solution and become impregnated therewith, after which they are raised slowly and, following the movement of rotation of the drum, as indicated by the arrow in Fig. 1, assume the vertical position, in which they are separated from each other and straightened, and as the drum continues to turn they are again and again immersed in the solution and

again and again withdrawn therefrom and straightened.

The selection of tanning agents to be employed with this apparatus is quite material. It depends on the nature and quality of the leathers which it is proposed to manufacture. The tanning solutions should be well decolored if it be desired to obtain leather of good color. Their absolute decoloration is so much more necessary because the tanning is effected partly in contact with the air, and consequently under special conditions of oxidability.

The leathers which have been manufactured in the experiments made with a view to determine the conditions of operation of this apparatus have been preliminarily decolored; but the tanning solution contained in the reservoir has been maintained during the entire operation at 2.5° Baumé for small skins, such as calf-skin, and 3.5° for large skins. The time required for the complete penetration of leathers varies from one to six days; but the strength of the solution and the number of turns of the apparatus and also the nature of the tanning solution may vary this time to a very great extent.

What I claim as my invention is—

A rotary leather-tanning drum comprising in combination two heads C D D′ united by tie-braces F and furnished with exterior journals E′ by which the drum is mounted in a tank, circular metal channel-plates B attached to the faces of said heads and divided by said braces F into a number of arc-shaped sections each of which has an opening *b*, bars A from which the skins may be suspended by their edges and the extremities of which enter through the notches or openings *b* into the channels of the said channel-plates, and means for closing the said notches or openings when the bars are in place, all substantially as herein described.

In witness whereof I have hereunto set my hand in the presence of two subscribing witnesses.

VALERY GALLIEN.

Witnesses:
CLYDE SHROPSHIRE,
ALCIDE FABE.