(12) INTERNATIONAL APPLICATION PUBLISHED UNDER THE PATENT COOPERATION TREATY (PCT)

(19) World Intellectual Property Organization
International Bureau

(43) International Publication Date
31 January 2008 (31.01.2008)

PCT

(10) International Publication Number
WO 2008/013802 A2

(51) International Patent Classification:
H04N 11/02 (2006.01) *H04N 7/12* (2006.01)

(21) International Application Number:
PCT/US2007/016628

(22) International Filing Date: 24 July 2007 (24.07.2007)

(25) Filing Language: English

(26) Publication Language: English

(30) Priority Data:
11/494,105 27 July 2006 (27.07.2006) US

(71) Applicant *(for all designated States except US)*: **LSI CORPORATION** [US/US]; 1621 Barber Lane, Milpitas, CA 95035 (US).

(72) Inventor; and

(75) Inventor/Applicant *(for US only)*: **WINGER, Lowell** [CA/CA]; 462 Sandbanks Cr., Waterloo, Ontario N2V 2J2 (CA).

(81) Designated States *(unless otherwise indicated, for every kind of national protection available)*: AE, AG, AL, AM, AT, AU, AZ, BA, BB, BG, BH, BR, BW, BY, BZ, CA, CH, CN, CO, CR, CU, CZ, DE, DK, DM, DO, DZ, EC, EE, EG, ES, FI, GB, GD, GE, GH, GM, GT, HN, HR, HU, ID, IL, IN, IS, JP, KE, KG, KM, KN, KP, KR, KZ, LA, LC, LK, LR, LS, LT, LU, LY, MA, MD, ME, MG, MK, MN, MW, MX, MY, MZ, NA, NG, NI, NO, NZ, OM, PG, PH, PL, PT, RO, RS, RU, SC, SD, SE, SG, SK, SL, SM, SV, SY, TJ, TM, TN, TR, TT, TZ, UA, UG, US, UZ, VC, VN, ZA, ZM, ZW.

(84) Designated States *(unless otherwise indicated, for every kind of regional protection available)*: ARIPO (BW, GH, GM, KE, LS, MW, MZ, NA, SD, SL, SZ, TZ, UG, ZM, ZW), Eurasian (AM, AZ, BY, KG, KZ, MD, RU, TJ, TM), European (AT, BE, BG, CH, CY, CZ, DE, DK, EE, ES, FI, FR, GB, GR, HU, IE, IS, IT, LT, LU, LV, MC, MT, NL, PL, PT, RO, SE, SI, SK, TR), OAPI (BF, BJ, CF, CG, CI, CM, GA, GN, GQ, GW, ML, MR, NE, SN, TD, TG).

Published:
— *without international search report and to be republished upon receipt of that report*

For two-letter codes and other abbreviations, refer to the "Guidance Notes on Codes and Abbreviations" appearing at the beginning of each regular issue of the PCT Gazette.

(54) **Title:** METHOD FOR VIDEO DECODER MEMORY REDUCTION

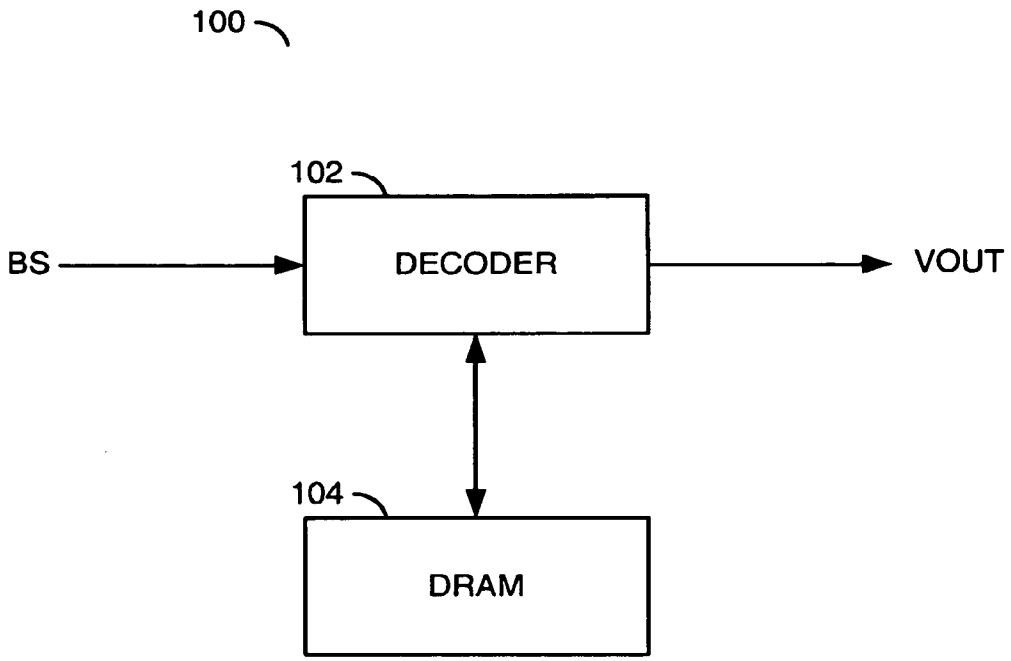

(57) **Abstract:** A method for video decoding is disclosed. The method generally includes the steps of (A) decoding a first picture from a bitstream, the first picture having a first resolution, (B) storing the first picture at the first resolution in a memory and (C) storing the first picture at a second resolution in the memory, wherein the second resolution is lower than the first resolution.

WO 2008/013802 A2

METHOD FOR VIDEO DECODER MEMORY REDUCTION

Field of the Invention

The present invention relates to video decoding generally and, more particularly, to a method for video decoder memory reduction.

Background of the Invention

As the market for video decoders matures, a cost and size of the memory used to buffer pictures in the decoding process is becoming an important factor. Conventional techniques used to reduce the decoding memory for MPEG-2 compliant bitstreams are (i) dropping B-frames and (ii) storing reference frames at a reduced resolution. However, the conventional solutions are far from optimal in terms of a quality versus a memory tradeoff for an H.264-compliant decode. Unlike MPEG-2 and other prior standards, the H.264 decode permits (i) multiple reference frames, (ii) mandatory storage of non-reference pictures for reordering delay only (and not for use as references), (iii) very flexible picture patterns (i.e., Groups of Pictures), (iv) hierarchical Groups of Pictures and (v) reference B-frames.

Summary of the Invention

The present invention concerns a method for video decoding. The method generally comprises the steps of (A) decoding a first picture from a bitstream, the first picture having a first resolution, (B) storing the first picture at the first resolution in a memory and (C) storing the first picture at a second resolution in the memory, wherein the second resolution is lower than the first resolution.

The objects, features and advantages of the present invention include providing a method for video decoder memory reduction that may (i) reduce a size of a decoded picture buffer, (ii) minimize potential drift and/or error due to resolution reduction of reference pictures, (iii) minimize potential drift and/or error due to missing reference pictures and/or (iv) provide a better tradeoff of a memory size versus a decoded video quality compared with conventional techniques.

Brief Description of the Drawings

These and other objects, features and advantages of the present invention will be apparent from the following detailed description and the appended claims and drawings in which:

FIG. 1 is a block diagram of a circuit in accordance with a preferred embodiment of the present invention;

FIG. 2 is a table for a first example decoding sequence discarding the oldest reference pictures;

FIG. 3 is a table for the first example decoding sequence dynamically reducing the oldest reference pictures from a first buffer size;

FIG. 4 is a table for the first example decoding sequence dynamically reducing the oldest reference pictures from a second buffer size;

FIG. 5 is a table for the first example decoding sequence reducing all reference pictures and discarding the oldest reference pictures;

FIG. 6 is a table for a second example decoding sequence discarding the oldest reference pictures;

FIG. 7 is a table for the second example decoding sequence dynamically reducing the oldest reference pictures from a first buffer size;

FIG. 8 is a table for the second example decoding sequence dynamically reducing the oldest reference pictures from a second buffer size;

FIG. 9 is a table for the second example decoding sequence reducing all reference pictures for storage and discarding the oldest reference pictures;

FIG. 10 is a table for a third example decoding sequence discarding the oldest reference pictures;

FIG. 11 is a table for the third example decoding sequence temporarily accumulating reference B-pictures and discarding the oldest reference pictures;

FIG. 12 is a table for the third example decoding sequence reducing all reference pictures and discarding the oldest reference pictures;

FIG. 13 is a table for a fourth example decoding sequence discarding the oldest reference pictures;

FIG. 14 is a table for the fourth example decoding sequence dynamically reducing the oldest reduced-resolution reference pictures;

FIG. 15 is a table for the fourth example decoding sequence reducing some reference pictures, minimizing temporal errors and temporarily accumulating;

FIG. 16 is a table for the fourth example decoding sequence reducing some reference pictures, minimizing temporal accumulation and discarding the oldest reference pictures;

FIG. 17 is a table for the fourth example decoding sequence reducing all reference pictures and discarding the oldest reference pictures;

FIG. 18 is a flow diagram of a method for processing the pictures;

FIG. 19 is a diagram of sample writes and releases in a decoded picture buffer;

FIG. 20 is a flow diagram of an example method for processing reduced-resolution reference data; and

FIG. 21 is a diagram of an example sequence of pictures.

Detailed Description of the Preferred Embodiments

Referring to FIG. 1, a block diagram of a circuit 100 is shown in accordance with a preferred embodiment of the present invention. The circuit (or system) 100 may be referred to as a media processor circuit. The media processor circuit 100 generally comprises a circuit (or module) 102 and a circuit (or module) 104. An input signal (e.g., BS) may be received by the circuit 102. An output signal (e.g., VOUT) may be generated and presented by the circuit 102. The circuit 102 and the circuit 104 may be in communication with each other to exchange data.

The signal BS may be a compressed video signal, generally referred to as a bitstream. The signal BS may comprise a sequence of progressive-format frames and/or interlace-format fields. The signal BS may be compliant with a VC-1, MPEG and/or H.26x standard. The MPEG/H.26x standards generally include H.261, H.264, H.263, MPEG-1, MPEG-2, MPEG-4 and H.264/AVC. The MPEG standards may be defined by the Moving Pictures Expert Group, International Organization for Standards, Geneva, Switzerland. The H.26x standards may be defined by the

International Telecommunication Union-Telecommunication Standardization Sector, Geneva, Switzerland. The VC-1 standard may be defined by the document Society of Motion Picture and Television Engineer (SMPTE) 421M-2006, by the SMPTE, White Plains, New York.

The signal VOUT may be one or more analog video signals and/or one or more digital video signals. The signal VOUT generally comprises a sequence of progressive-format frames and/or interlace-format fields. The signal VOUT may include synchronization signals suitable for synchronizing a display with the video information. The signal VOUT may be generated in analog form as, but is not limited to, an RGB (Red, Green, Blue) signal, an EIA-770 (e.g., YCrCb) signal, an S-video signal and/or a Composite Video Baseband Signal (CVBS). In digital form, the signal VOUT may be generated as, but is not limited to, a High Definition Multimedia Interface (HDMI) signal, a Digital Video Interface (DVI) signal and/or a BT.656 signal. The signal OUT may be formatted as a standard definition signal or a high definition signal.

The circuit 102 may be referred to as a decoder circuit. The decoder circuit 102 may be operational to decode and format the video information received in the signal BS to generate the signal VOUT. Decoding may be compatible with the VC-1, MPEG and/or H.26x standards.

The circuit 104 may be referred to as a memory circuit. The memory circuit 104 may be operational to temporarily buffer frames/fields (pictures) and other information used in decoding and formatting the digital video and audio data. A buffering region within the memory circuit 104 used to buffer decoded pictures may be referred to as a decoded picture buffer (DPB). The memory circuit 104 may be implemented as a single data rate (SDR) dynamic random access memory (DRAM) or a double data rate (DDR) DRAM. Other memory technologies may be implemented to meet the criteria of a particular application.

A size reduction of the DPB may use one or more of the techniques as follows. In some embodiments, the decoder circuit 102 may first store a picture (e.g., PIC1) into the memory circuit 104 at normal resolution (e.g., RESA) and later store the picture PIC1 to the memory circuit 104 at a different resolution (e.g., RESB). Generally, the normal-resolution RESA is greater than the RESB. For example, the resolution RESA may be a full resolution of the decoded pictures. The resolution RESB may be a half-horizontal resolution, a half-vertical resolution, a half-horizontal and half-vertical resolution or another reduced resolution.

In other embodiments, the decoder circuit 102 may not write all of the reference pictures that may be indicated as appropriate for reconstruction/decoding of other pictures. When

a reference picture is missing from the memory circuit 104, an error concealment technique may be utilized to create a replacement reference picture for using in the decoding.

In still other embodiments, the decoder circuit 102 generally writes (and/or resizes) pictures held for reordering delay purposes at a reduced resolution. The "reduction" may be relative to a normative decoding resolution/process (e.g., the H.264 standard decoding process for a particular bitstream syntax). After the reduced pictures are read from the memory circuit 104 and before being displayed, the reduced pictures may be upsampled to restore the normative resolution.

In other embodiments, the decoder circuit 102 may be operational to write only some of the pictures at a reduced resolution. The remaining decoded pictures may be buffered in the memory circuit 104 at the normal (full) resolution.

Referring to FIGS. 2-21, the acronym RR may refer to a condition where potential drifting and/or errors may be introduced while decoding a picture due to a reference picture being stored in the DPB (e.g., the memory circuit 104) at a reduced resolution. The acronym FR may refer to a condition where potential drifting and/or errors may be introduced while decoding a picture due to a missing reference picture previously released/overwritten/deleted from the DPB. The acronym HHR may refer to a condition where a picture is stored in the DPB at a

half-horizontal resolution. In some embodiments, the DPB may have storage for one additional full-resolution picture to receive and buffer the current picture being decoded prior to display. In other embodiments, the DPB may have additional storage for at least two extra macroblock rows to receive and buffer the current picture rows prior to display.

Referring to FIG. 2, a table for a first example decoding sequence discarding the oldest reference pictures is shown. The example decoding sequence illustrates an intra-picture ("I") followed by a sequence of predicted pictures ("P") or and an instantaneous decoding refresh (IDR) picture access point (e.g., a start of a Group of Pictures (GOP)). The example sequence of pictures may be a stream comprising I P P P... Decoding of the P-pictures may use up to four reference pictures. A display delay (row 132) may be (i) at least 2 macroblock rows behind the decode for H.264 streams with macroblock adaptive field/frames and (ii) at least one macroblock row behind the decode in most other cases. Storage of the decoded pictures into the DPB is generally performed at full resolution in the example.

The decoding sequence generally starts in a column 110 where an initial I-picture (e.g., I0) is (i) decoded (row 130) and (ii) is displayed (row 132) after a short delay. In a column 112, (i) the picture I0 may be stored in the DPB (row 134), (ii) an initial P-picture (e.g., P0) may be decoded (row 130)

utilizing the picture I0 as a reference picture and (iii) the picture P0 may be displayed (row 132). Since the picture I0 is available in the DPB, the decoded picture P0 generally does not experience any drift and/or errors due to a missing reference frame (e.g., no RF induced distortion).

In a column 114, (i) the picture P0 may be stored in the DPB (row 132) as a reference picture, (ii) a new P-picture (e.g., P1) may be decoded (row 130) using one or more of the reference pictures (e.g., I0 and/or P0) from the DPB and (iii) the picture P1 may be displayed (row 132). If the DSP is sized to hold two or more full-resolution reference pictures (rows 136, 138 and 140), all potential reference pictures are available for decoding the picture P1 and no missing picture drift may be experienced in the picture P1. If the DPB is sized to hold less than two full-resolution reference pictures (row 134), the picture P1 may experience some minor drift/error as the oldest reference picture I0 may have been released from the DPB and/or overwritten by the reference picture P0.

In a column 116, (i) the picture P1 may be stored in the DPB (row 132) as a reference picture, (ii) a new P-picture (e.g., P2) may be decoded (row 130) using one or more of the reference pictures (e.g., I0, P0 and/or P1) from the DPB and (iii) the picture P2 may be displayed (row 132). If the DPB is sized to hold at least three full reference pictures (rows 138

and 140), decoding of the picture P2 may have all three reference pictures available. If the DPB is sized to hold less than three full reference pictures (rows 134 and 136), the picture P2 may experience some limited drift and/or error if either or both of the reference pictures I0 and/or P0 were discarded as the oldest reference pictures.

In a column 118, (i) the picture P2 may be stored in the DPB (row 132) as a reference picture, (ii) a new P-picture (e.g., P3) may be decoded (row 130) using one or more of the reference pictures (e.g., I0, P0, P1 and/or P2) from the DPB and (iii) the picture P3 may be displayed (row 132). If the DPB has sufficient available space to hold all four reference pictures (row 140), no drifting and/or errors may be introduced to the decoding of the picture P3 due to a missing reference picture. If the DPB is sized to store less than four full-resolution reference pictures (rows 134, 136 and 138), the picture P3 may experience some small drifting/errors due to a potentially missing reference picture.

In a column 120, (i) the reference picture I0 (if still in the DPB) may be discarded or released to make room for a newer reference picture, (ii) the picture P3 may be stored in the DPB (row 132) as a reference picture, (iii) a next P-picture (e.g., P4) may be decoded (row 130) using one or more of the reference pictures (e.g., P0, P1, P2 and/or P3) and (iv) the picture P4 may

be displayed (row 132). No missing-reference-picture induced drift/errors may occur in the picture P4 if the DPB is sufficiently large to hold four or more full-resolution reference pictures (row 140). Otherwise, the older reference pictures may have been discarded (rows 134, 136 and 138) causing possible slight drift/error in the picture P4.

In a column 122, (i) the reference picture P0 may be discarded, (ii) the picture P4 may be stored in the DPB (row 132) as a reference picture, (iii) a new P-picture (e.g., P5) may be decoded (row 130) using the available reference pictures (e.g., P1, P2, P3 and/or P4) in the DPB and (iv) the picture P5 may be displayed (row 132). As with the picture P4, the picture P5 may not have a missing-reference-picture induced drift/error if the DPB is sized to hold at least four full-resolution reference pictures (row 140). If the DPB capacity holds less than four reference pictures (rows 134, 136 and 138), some limited drift/error may be introduced in the decoding of the picture P5 due to the missing reference pictures.

Referring to FIG. 3, a table for the first example decoding sequence dynamically reducing a resolution of the oldest reference pictures is shown. The example sequence of pictures may be a stream comprising I P P P... Decoding of the P-pictures may use up to four reference pictures. The DPB in the example

may be sized to hold up to three full-resolution reference pictures.

In the columns 110-116, the pictures I0, P0, P1 and P2 may be decoded and displayed as shown before in FIG. 2. No drifting or errors may be introduced during decode due to missing reference pictures as the DPB may hold at least three full-resolution reference pictures. In a column 150, (i) the reference pictures I0 and P0 may be reduced (rows 156 and row 158) to occupy the same space as a single full-resolution reference picture, (ii) the picture P2 may be stored in the DPB (row 134) as a full-resolution reference picture, (iii) the picture P3 may be decoded (row 130) and (iv) the picture P3 may be displayed (row 132). Since the decoding of the picture P3 may rely on a reduced-resolution reference picture (e.g., hI0 and/or hP0), some small drift and/or error may be introduced into the picture P3.

In the column 152, room for a newest reference picture may be opened by (i) discarding the reduced picture I0 (e.g., hI0) from the DPB and (ii) reducing the reference picture P1 (row 156) such that the reduced picture P1 (e.g., hP1) and the reduced picture P0 (e.g., hP0) consume the space of a single full-resolution picture (rows 156 and 158). Next, (iii) the picture P3 may be stored in the DPB (row 134), (iv) the picture P4 may be decoded and (v) the picture P4 may be displayed. Since

the decoding of the picture P4 may rely on a reduced-resolution reference picture (e.g., hP0 and/or hP1), some minor drift and/or error may be introduced into the picture P4. Decoding of the picture P5 may proceed (column 154) in the same way as the picture P4.

Referring to FIG. 4, a table for the first example decoding sequence dynamically reducing the oldest reference pictures is shown. The example sequence of pictures may be a stream comprising I P P P... Decoding of the P-pictures may use up to four reference pictures. The DPB in the example may be sized to hold up to 2.5 full-resolution reference pictures. Other sized of the DPB (e.g., 3.5 full-resolution reference pictures) may follow the same technique.

In the columns 110-114, the pictures I0, P0 and P1 may be decoded, displayed and stored in the DPB as before. In a column 160, (i) the reference picture I0 may be downsampled (e.g., hI0) to fit into a one-half full-resolution space (row 170), (ii) the reference picture P1 may be stored in the DPB (row 134), (iii) the picture P2 may be decoded (row 130) using one or more of the reference pictures hI0, P1 and/or P2, (iv) the picture P2 may then be displayed (row 132). Since the decoding of the picture P2 potentially uses the reduced-resolution reference picture hI0, some limited drift and/or error may exist in the picture P2.

In a column 162, room for a newest reference picture may be opened in the DPB by (i) reducing the resolution of both of the reference picture PO (row 168) and the reference picture P1 (row 170). In addition, (ii) the reference picture hI0 may remain in the DPB (row 172). Next, (iii) the picture P2 may be stored as a reference picture, (iv) the picture P4 decoded (row 130) and (v) the picture P4 displayed (row 132). Since three of the four possible reference pictures (e.g., hI0, hP0 and hP1) used to decode the picture P3 are stored in reduced resolution, the picture P3 may contain limited drift and/or errors.

In a column 164, (i) the reference picture hI0 may be discarded and (ii) the resolution of the reference picture P2 may reduced (e.g., hP2) to create space for a newer reference picture. Next (iii) the picture P3 may be stored in the DPB, (iv) the picture P4 may be decoded and (v) the picture P4 may be displayed. As before, the picture P4 may have slight potential drift and/or error due to three of the four reference pictures being stored in the DPB at reduced resolution. Decoding may continue in a column 166 with the P5 picture using the full-resolution reference picture P4 and the reduced-resolution reference pictures hP3, hP2 and/or hP1.

Referring to FIG. 5, a table for the first example decoding sequence reducing all reference pictures and discarding the oldest reference pictures is shown. The example sequence of

pictures may be a stream comprising I P P P... Decoding of the P-pictures may use up to four reference pictures. The DPB is illustrated at different sizes.

Referring to FIG. 6, a table for a second example decoding sequence discarding the oldest reference pictures is shown. The second example sequence of pictures may be a stream I B B P B B... In the example, the B-pictures are generally non-reference pictures. For a Blu-ray Disc™ H.264 embodiment, a B-picture may only reference immediately preceding/following I-pictures, P-pictures and/or reference B-pictures. A field picture GOP comprising I P B B B B P P B B B B P P with complementary-field-pairs replacing pictures may also work in the examples that follow. Blu-ray Disc™ is a trademark of the Blu-ray Disc Association.

Referring to FIG. 7, a table for the second example decoding sequence dynamically reducing the oldest reference pictures is shown. The DPB may be sized to store 3 full-resolution reference pictures in the example. A slight potential for drift/error due to reduced reference pictures may exist starting at (i) the picture P3 and beyond under the Blu-ray criteria and (ii) the picture B4 and beyond without the Blu-ray criteria.

Referring to FIG. 8, a table for the second example decoding sequence dynamically reducing the oldest reference

pictures is shown. The DPB may be sized to store 2.5 full-resolution reference pictures in the example. A DPB of other half-sizes (e.g., 3.5) may operate in a similar manner. A minor potential for drift/error due to reduced reference pictures may exist starting at (i) the picture P2 and beyond under the Blu-ray criteria and (ii) the picture B2 and beyond without the Blu-ray criteria.

Referring to FIG. 9, a table for the second example decoding sequence reducing all reference pictures for storage and discarding the oldest reference pictures is shown. Since all of the reference pictures are stored at reduced resolution, all pictures starting at P0 may have small reduced resolution induced drift/errors. The missing-reference-picture induced drift/errors may be similar to FIG. 6.

Referring to FIGS. 10-17, the terminology "B" may refer to a non-reference B-picture and "Br" may refer to a reference B-picture. The third example sequence comprising I Br B P Br B... is generally illustrated. For the Blu-ray H.264 criteria, the B-pictures may only reference immediately preceding/following I-pictures, P-pictures and reference Br-pictures.

Referring to FIG. 10, a table for a third example decoding sequence discarding the oldest reference pictures is shown. Referring to FIG. 11, a table for the third example decoding sequence temporarily accumulating reference B-pictures

and discarding the oldest reference pictures is shown. Referring to FIG. 12, a table for the third example decoding sequence reducing all reference pictures and discarding the oldest reference pictures is shown.

Referring to FIG. 13, a table for a fourth example decoding sequence discarding the oldest reference pictures is shown. The fourth example sequence generally comprises the pictures I B Br B P B Br B... in a hierachical GOP. For a DPB of size 3 and non-Blu-ray criteria, a potential missing-reference-picture drift may exist after the picture B2. For the DPB size 3 with the Blu-ray criteria, the potential missing-reference-picture drift may exist after the picture P2.

Referring to FIG. 14, a table for the fourth example decoding sequence dynamically reducing the oldest reduced-resolution reference pictures is shown. With the Blu-ray criteria, a potential reduced-reference-picture drift may exist for decoded pictures starting with the picture P2. Without the Bluray criteria, the potential reduced-reference-picture drift may exist starting at decoded picture B2.

Referring to FIG. 15, a table for the fourth example decoding sequence reducing some reference picture, minimizing temporal errors and temporarily accumulating is shown. Generally, drift may be seen in the B-pictures but not in the P-pictures. No accumulation may be performed past a P-picture in

the example. Furthermore, the example may be done without dynamic memory reduction as sub-sampled storage may be enough. For the DPB size of 3.5, the reference picture hI0 may only be used for decoding the picture Br2 so the reduced-resolution reference errors may accumulate only a short temporal distance.

Referring to FIG. 16, a table for the fourth example decoding sequence reducing some reference pictures, minimizing temporal accumulation and discarding the oldest reference pictures is shown. Referring to FIG. 17, a table for the fourth example decoding sequence reducing all reference pictures and discarding the oldest reference pictures is shown. Some reduced-reference-picture induced drift/error may occur for all pictures after the picture I0 for all examples. Missing-reference-picture drift/error may be caused by discarding the oldest reference pictures.

Based on the above descriptions, the media processor circuit 100 may provide solutions for a Blu-ray 1080-line interlaced, 4 reference picture decode that may have very little drift (visible error) most of the time. The drift may remain small even if only 3 reference pictures worth of storage/memory are used for the most common GOP structures. Several preferred solutions for DPB=3 pictures are show in bold in the FIGS. 2-17 for some of the most common GOP structures used for H.264, I P

P P P..., I B B P B B P..., I Br B P Br B P Br B P... and I B Br B P B Br B P...

The following is an example set of rules to limit a "worst-case" influence from reducing the memory used in H.264 decodes, if appropriate for space considerations. Rule 1: Reduce non-reference pictures first since the non-reference pictures generally cause no temporal on-going drift. Rule 2: Reduce reference pictures with short (e.g., 1 or 2 pictures in either direction) temporal potential indirect influences on prediction/reconstruction to reduce the temporal duration of drift due to mismatches. Rule 3: Reduce the "oldest" reference pictures, or the reference pictures that may be temporally furthest from succeeding decoding pictures on the principal that reference pictures that are further away may be used less frequently (in general) for prediction/reconstruction. Rule 4: Take into account a memory bandwidth and a processing cost of downsizing pictures already present in the memory. If the memory bandwidth and/or processing cycles are scarce, try to reduce pictures that are currently being decoded so that (i) the reconstructed information may be stored at reduced resolution once, rather than (ii) stored at full resolution, read back, reduced in resolution and then written back to the memory. Rule 4 may take precedence over rules 1-3 according to the system bottlenecks. If a memory storage is a main system bottleneck,

generally apply rules 1, 2, 3 in order. If one or both of the processing cycles and/or memory bandwidth are the main system bottlenecks, rule 4 may be considered until cycles/bandwidth are within budgets.

Referring to FIG. 18, a flow diagram of a method 200 for processing the pictures is shown. The method (or process) 200 generally comprises a step (or block) 202, a step (or block) 204, a step (or block) 206, a step (or block) 208, a step (or block) 210, a step (or block) 212, a step (or block) 214, a step (or block) 216, a step (or block) 218, a step (or block) 220, a step (or block) 222, a step (or block) 224 and a step (or block) 226.

The decoder circuit 102 may receive the encoded pictures in the signal BS at the step 202. In the step 204, the encoded pictures may be decoded by the decoder circuit 102 to generate reconstructed pictures at a full resolution. In some embodiments, the reconstructed pictures at the full resolution may be stored in the memory circuit 104 in the step 206. The reconstructed pictures may be read from the memory circuit 104 in a display sequence (which may be different from a decode sequence) in the step 208. In the step 210, the reconstructed picture may be displayed.

In some embodiments, storage of entire reconstructed pictures all at once may be avoided. In such cases, a few (e.g.,

two) macroblock rows of the full-resolution decoded pictures may be buffered in the memory circuit 104 as the picture is being decoded. Simultaneously with newer macroblock rows being stored, the older macroblock rows may be read from the memory circuit 104 in the step 214 and displayed in the step 210.

In some embodiments, the reconstructed pictures may be stored in the memory circuit 104 in a reduced-resolution format. For example, after a picture has been decoded at the full (normal) resolution, the picture may be downsampled in the step 216 and stored in the memory circuit 104 at the reduced resolution in the step 218. Sometimes, the reconstructed picture at the full resolution may already exist in the memory circuit 104 per step 206. Therefore, the reconstructed picture may be read from the memory circuit 104 in the step 208, downsampled in the step 216 and written back into the memory circuit 104 in the step 218. To avoid having two copies of the same reference picture in the memory circuit 104 simultaneously, the region previously occupied by the full-resolution picture may be released in the step 220. The releasing may occur before or after the reduced-resolution picture is written. In the step 220, the reduced-resolution reconstructed pictures may be read from the memory circuit 104 in a display order (which may be different from a write order). An upsampling of the reduced-

resolution pictures may be performed in the step 224 to restore the pictures to the full resolution for display in the step 210.

In other embodiments, the decoding may be configured to perform both the reconstruction and downsampling of the pictures simultaneously. In the step 226, the reconstructed pictures may be generated directly at the reduced resolution (e.g., downsampled as part of a block filtering). The reduced-resolution pictures may then be stored in the step 216, read in the step 222, upsampled in the step 224 and displayed in the step 210.

Referring to FIG. 19, a diagram of sample writes and releases in the decoded picture buffer (DPB) is shown. A first picture (e.g., P0 FULL) may be stored in the DPB in an area 230. The rest of the DPB in a region 232 may remain empty and available for use. To increase the available space in the DPB, the picture P0 may be downsampled to a half-horizontal resolution (e.g., P0 HHR) and stored in a first half of the area 230 (e.g., stored in the area 234). The second half of the area 230 (e.g., the area 236) where the reduced picture P0 HHR does not overlap the original picture P0 FULL may be released for later use.

A second full-resolution picture (e.g., P1 FULL) may be stored in the DPB in a region 238. The region 238 may overlap the unused region 236 left available when the picture P0 FULL was reduced. The P1 FULL may later be read from the DPB, downsampled

and a reduced version (e.g., P1 HHR) written in the DPB in the area 240. With the picture P1 HHR available in the DPB, the area 238 holding the picture P1 FULL may be released (made available) for further use. A third full-resolution picture (e.g., P3 FULL) may be stored either in the released (open) area 238 or (as shown) stored in another region 242 in the DPB.

At some later time, the picture P0 HHR may be discarded freeing the space 234 for new pictures. Another new picture (e.g., P3 FULL) may be stored in the DPB in a space 244 comprising the old space 234 and a first half of the space 238. The second half of the open space 238 (e.g., space 246) may remain unused. The picture P3 FULL may also be stored in the DPB at a reduced resolution (e.g., P3 HHR) in either the space 246 or (as shown) in another area (e.g., area 248) in the DPB.

Referring to FIG. 20, a flow diagram of an example method 250 for processing reduced-resolution reference data is shown. The method (or process) 250 generally comprises a step (or block) 252, a step (or block) 254, a step (or block) 256, a step (or block) 258, a step (or block) 260, a step (or block) 262 and a step (or block) 264. The method 250 may form sub-steps within the decode steps 204 and/or 226 shown in FIG. 18.

As residual macroblocks are reconstructed, associated reduced-resolution reference macroblocks may be read from the memory circuit 104 in the step 252. In the step 254, the

reduced-resolution reference macroblocks may be upsampled to the full resolution. A motion compensation (e.g., sub-pixel interpolation) may be performed on the full-resolution reference macroblocks in the step 256. The motion compensated reference macroblocks may then be added to the residual macroblocks to generate reconstructed macroblocks in the step 258. The reconstructed macroblocks may be block filtered in the step 260 and then stored and/or displayed.

In some embodiments, one or more reference pictures may have been released from the memory circuit 104 before being used in the decoding (e.g., step 262). To compensate for the missing reference pictures, an error concealment technique may be used in the step 264 to create suitable replacements for the missing reference macroblocks. The error concealment techniques may include, but are not limited to, substituting data from an alternate reference picture for a missing reference picture and recreating a missing reference picture by spatial prediction from another picture. Other error concealment techniques may be implemented to meet the criteria of a particular application.

Referring to FIG. 21, a diagram of an example sequence of pictures is shown. The example sequence generally comprises P0 B1 B2 B3 B4 B5 B6 B7 P8. The picture P0 may be used as a reference picture for the pictures B1, B2 and B4. The picture P8 may be used as the reference picture for the pictures B7, B6

and B4. The picture B4 may be used as a reference picture for the pictures B3 and B5. The picture B2 may be a reference for the pictures B1 and B3. The picture B6 may be a reference for the pictures B5 and B7.

To minimize the use of the DPB, some of the reference pictures may be downsampled (downsized). In some embodiments, the oldest reference pictures may be downsized earlier. "Oldest" may be determined using any one or more of the following criteria (i) H.264 picture order count, (ii) time stamps, (iii) display order, (iv) decoding order, (v) H.264 frame number (e.g., frame_num), (vi) H.264 List 0 picture number (e.g., picNumL0), (vii) H.264 List 1 picture number (e.g., picNumL1) and (viii) whether the pictures are "short-term" reference pictures or "long-term" reference pictures. An example of a short-term reference picture may be the picture B1 that is only used for temporally adjacent picture B2. An example of a long-term reference picture may be the picture P0 that is used for decoding temporally distant picture P4.

In other embodiments, downsizing of the reference pictures may be performed based on a short temporal influence earlier. For example, reference B-pictures that are not used for prediction, even indirectly, by more than a few/couple of adjacent frames may be downsampled. In another example, P-pictures only used by Br-frames that are only used, even

indirectly, for referencing a few/couple adjacent frames may be downsampled.

Resolution reduction may be used to conserve space in the DSP when reconstructed pictures are buffered for a display reordering (reorder delay). For example, some or all non-reference pictures subject to a reorder delay may be stored in the DPB at a reduced resolution. The pictures may then be upsampled to the full resolution just prior to being displayed. The "reduction" is generally relative to a normative decoding resolution/process (eg. the H.264 standard decoding process for a particular bitstream syntax). The non-reference pictures stored only for reordering delay purposes generally will not propagate drift to any other pictures if subsampled (reduced).

Downsampling may be applied to the reference pictures under various conditions. For example, reference pictures that are known to propagate drift/error short temporal distances may be prioritized for reduced-resolution storage. In particular, reference B-frames in Blu-ray streams may not propagate drift to more than the B-frames that follow in decoding order and that precede the next I-frame or P-frame in decoding order. More specifically, 2 additional frames at most may drift in addition to a downsampled reference B-frame, due to reference picture downsampling in Blu-ray streams.

In another example, reference pictures that may be known (by some process such as forward stream analysis) to contribute less to the prediction of other pictures may be downsampled. Furthermore, certain reference pictures that may introduce less distortion if reduced in resolution (e.g., already relatively blurry or not referenced for prediction by many other pixels in other pictures) may also be prioritized for reduced-resolution storage.

The functions performed by the diagrams of FIGS. 18 and 20 may be implemented using a conventional general purpose digital computer programmed according to the teachings of the present specification, as will be apparent to those skilled in the relevant art(s). Appropriate software coding can readily be prepared by skilled programmers based on the teachings of the present disclosure, as will also be apparent to those skilled in the relevant art(s).

The present invention may also be implemented by the preparation of ASICs, FPGAs, or by interconnecting an appropriate network of conventional component circuits, as is described herein, modifications of which will be readily apparent to those skilled in the art(s).

The present invention thus may also include a computer product which may be a storage medium including instructions which can be used to program a computer to perform a process in

accordance with the present invention. The storage medium can include, but is not limited to, any type of disk including floppy disk, optical disk, CD-ROM, magneto-optical disks, ROMs, RAMs, EPROMs, EEPROMs, Flash memory, magnetic or optical cards, or any type of media suitable for storing electronic instructions. As used herein, the term "simultaneously" is meant to describe events that share some common time period but the term is not meant to be limited to events that begin at the same point in time, end at the same point in time, or have the same duration.

While the invention has been particularly shown and described with reference to the preferred embodiments thereof, it will be understood by those skilled in the art that various changes in form and details may be made without departing from the scope of the invention.

CLAIMS

1. A method for video decoding, comprising the steps of:

(A) decoding a first picture from a bitstream, said first picture having a first resolution;

(B) storing said first picture at said first resolution; in a memory; and

(C) storing said first picture at a second resolution in said memory, wherein said second resolution is lower than said first resolution.

2. The method according to claim 1, further comprising the steps of:

releasing a region of said memory storing said first picture at said first resolution; and

storing a second picture in said memory using a portion of said region previously storing said first picture at said first resolution, said portion comprising a difference between (i) said first picture at said first resolution and (ii) said first picture at said second resolution.

3. The method according to claim 1, further comprising the step of:

releasing a region of said memory storing said first picture at said first resolution in response to said first picture being an oldest reference picture among a plurality of reference pictures stored in said memory, wherein said oldest reference picture is determined based on at least one of (i) a picture order count, (ii) a time stamp, (iii) a display order, (iv) a decode order, (v) a frame number, (vi) a List 0 picture number, (vii) a List 1 picture number and (viii) a temporal distance from a current picture being decoded.

4. The method according to claim 1, further comprising the step of:

releasing a region of said memory storing said first picture at said first resolution in response to both (i) said first picture being a non-reference picture and (ii) said first picture being subject to a reordering delay.

5. The method according to claim 1, further comprising the step of:

releasing a region of said memory storing said first picture at said first resolution in response to both (i) said first picture comprising one of a plurality of reference pictures stored in said memory and (ii) said first picture does not influence decoding over a long temporal distance.

6. The method according to claim 1, further comprising the step of:

generating said first picture at said second resolution by one of (i) decoding said bitstream and (ii) downsampling said first picture at said first resolution.

7. The method according to claim 1, further comprising the step of:

decoding a second picture from said bitstream, wherein said first picture at said second resolution is stored in said memory after said second picture has been decoded.

8. The method according to claim 1, wherein (i) said decoding comprises an H.264 standard decoding, (ii) said memory comprises a dynamic random access memory, (iii) said first resolution comprises a full resolution and (iv) said second resolution comprises a half-horizontal resolution.

9. The method according to claim 1, further comprising the steps of:

decoding a second picture from said bitstream; and

storing said second picture in said memory at said second resolution.

10. The method according to claim 9, further comprising the steps of:

upsampling said second picture from said second resolution to said first resolution; and

decoding a third picture from said bitstream using said second picture at said first resolution as a reference picture in said decoding.

11. The method according to claim 9, further comprising the step of:

generating said second picture at said second resolution by downsampling one of (i) said second picture at said first resolution not stored in said memory and (ii) said second picture at said first resolution stored in said memory based on at least one of (a) available memory bandwidth for said memory, (b) available downsampling cycles and (c) available storage area in said memory.

12. A method for video decoding, comprising the steps of:

(A) decoding a plurality of reference pictures from a bitstream;

(B) storing a subset of said reference pictures in a memory; and

(C) decoding a particular picture from said bitstream, wherein at least one of said reference pictures used to encode said particular picture is not stored in said memory while said particular picture is being decoded.

13. The method according to claim 12, wherein step (C) comprises the sub-step of:

decoding said particular picture using at least one error concealment technique.

14. The method according to claim 12, further comprising the step of:

discarding from said memory an oldest of said reference pictures, wherein said oldest reference picture is determined based on at least one of (i) a picture order count, (ii) a time stamp, (iii) a display order, (iv) a decode order, (v) a frame number, (vi) a List 0 picture number, (vii) a List 1 picture number and (viii) a temporal distance from a current picture being decoded.

15. A method for video decoding, comprising the steps of:

(A) decoding a plurality of first pictures from a bitstream, each of said first pictures having a first resolution;

(B) generating a plurality of second pictures by downsampling a subset of said first pictures, each of said second pictures having a second resolution lower than said first resolution;

(C) storing said second pictures in a memory; and

(D) reordering a sequence of said second pictures prior to display.

16. The method according to claim 15, further comprising the steps of:

decoding a plurality of reference pictures from said bitstream;

generating a plurality of reduced reference pictures by downsampling said reference pictures;

storing said reduced reference pictures in said memory; and

upsampling said reduced reference pictures for use in decoding said first pictures.

17. A method for decoding video, comprising the steps of:

(A) decoding a plurality reconstructed pictures from a bitstream, said reconstructed pictures comprising a plurality of first pictures and a plurality of second pictures;

(B) generating a plurality of third pictures by downsampling said second pictures; and

(C) storing both (i) said first pictures and (ii) said third pictures in a memory.

18. The method according to claim 17, wherein said second pictures comprise a plurality of non-reference pictures subject to a reordering delay.

19. The method according to claim 17, wherein said second pictures comprise a reference picture that does not influence decoding over a long temporal distance.

20. The method according to claim 17, wherein said second pictures comprise a reference picture that at least one of (i) is used in decoding a small number of said reconstructed pictures and (ii) introduces a small distortion in decoding said reconstructed pictures.

21. The method according to claim 17, wherein said second pictures comprise:

a plurality of non-reference pictures subject to a reordering delay; and

a reference picture used in decoding said non-reference pictures.

22. The method according to claim 17, wherein said reconstructed pictures further comprise a plurality of reference pictures, the method further comprising the steps of:

storing at least one of said second pictures in said memory, wherein said third pictures have a resolution lower than said at least one second picture;

storing a subset of said reference pictures in said memory, wherein at least one of said reference pictures used to encode a particular one of said reconstructed pictures is not stored in said memory while said particular picture is being decoded; and

reordering a sequence of said third pictures prior to display.

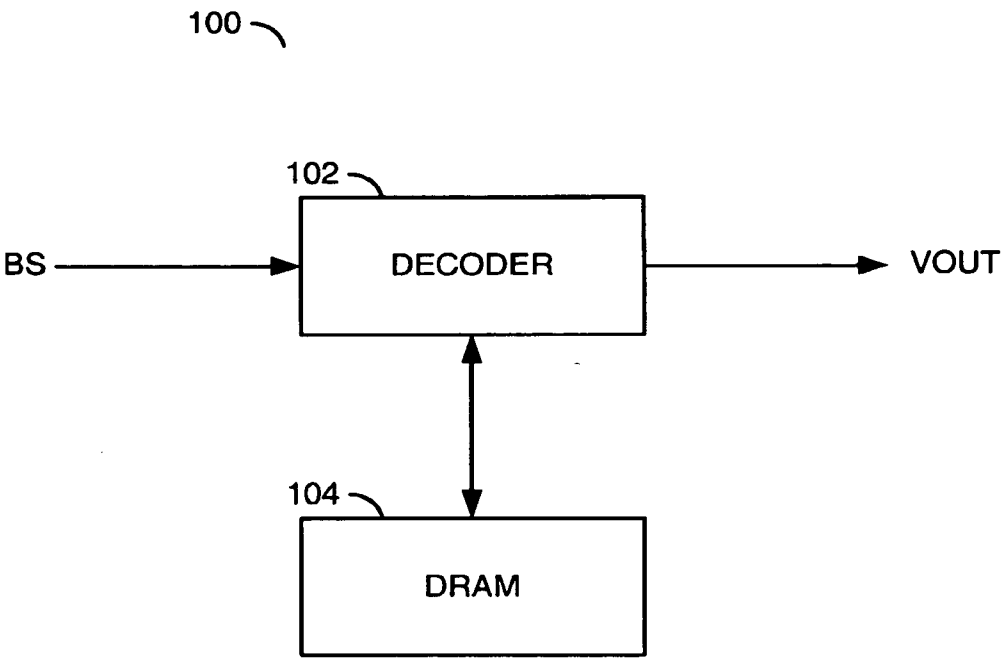

FIG. 1

	110	112	114	116	118	120	122		
	Method: discard oldest					IPPP.. stream', 4 ref. pictures			
130	decode	I0	P0	P1	P2	P3	P4	P5	..	RF DRIFT for DPB size
132	display (delayed)	I0	P0	P1	P2	P3	P4	P5	..	
134	Rec. min DPB=1		I0	P0	P1	P2	P3	P4	..	>= P1
136	DBP>=2 buffer			I0	P0	P1	P2	P3	..	>= P2
138	DPB>=3 buffer				I0	P0	P1	P2	..	>= P3
140	DPB==4 buffer					I0	P0	P1	..	no RF drift

FIG. 2

110 112 114 116 150 152 154

potential resolution reduction drift for >=P3 for all examples.

	Method: dynamically reduce oldest half-horizontal resolution						IPPP.. stream, 4 ref. pictures		
130	decode	I0	P0	P1	P2	P3	P4	P5	..
132	display (delayed)	I0	P0	P1	P2	P3	P4	P5	..
134	**DPB=3 buffer**		I0	P0	P1	P2	P3	P4	..
136	(do DPB=3.5 in			I0	P0	P1	P2	P3	..
156	similar way to 3				I0	hP0	hP1	hP2	..
158	& 2.5)					hI0	hP0	hP1	..

FIG. 3

110 112 114 160 162 164 166

potential resolution reduction drift for >=P2 for all examples.

	Method: dynamically reduce oldest half-horizontal resolution						IPPP.. stream, 4 ref. pictures		
130	decode	I0	P0	P1	P2	P3	P4	P5	..
132	display (delayed)	I0	P0	P1	P2	P3	P4	P5	..
134	DPB=2.5 buffer		I0	P0	P1	P2	P3	P4	..
168				I0	P0	hP1	hP2	hP3	..
170					hI0	hP0	hP1	hP2	..
172						hI0	hP0	hP1	..

FIG. 4

Resolution reduction drift for >=I0 for all examples

Method: reduce all half-horizontal resolution & discard oldest						IPPP.. stream, 4 ref. pictures			
decode	I0	P0	P1	P2	P3	P4	P5	..	RF DRIFT for DPB size
display (delayed)	I0	P0	P1	P2	P3	P4	P5	..	
Rec. min DPB=.5		hI0	hP0	hP1	P2	P3	P4	..	>=P1
DBP>=1 buffer			hI0	hP0	hP1	hP2	hP3	..	>=P2
DPB>=1.5 buff				hI0	hP0	hP1	hP2	..	>=P3
DPB==2 buffer					hI0	hP0	hP1	..	no RF drift

FIG. 5

Method: discard oldest						IBBPBBP.. frame stream, 4 ref. frames.							
decode	I0	P0	B0	B1	P1	B2	B3	P2	B4	B5	P3	..	RF DRIFT
display (delayed)		I0	B0	B1	P0	B2	B3	P1	B4	B5	P2	..	
Rec. min.		I0	P0	P0	P0	P1	P1	P1	P2	P2	P2	..	B2,B3,P2, ...
DPB=2			I0	I0	I0	P0	P0	P0	P1	P1	P1	..	
DPB>=3 buffer						I0	I0	I0	P0	P0	P0	..	B4,B5,P3,...
DPB==4 buffer									I0	I0	I0	..	No drift

FIG. 6

potential resolution reduction drift for decoded frames >= P3 (with Bluray restrictions). Without Bluray restrictions, for decoded frames >=B4.

Method: dynamically reduce oldest half-horizontal resolution					H.264 'IBBP-frame stream', 4 ref. frames.							
Decode	I0	P0	B0	B1	P1	B2	B3	P2	B4	B5	P3	..
display delayed)		I0	B0	B1	P0	B2	B3	P1	B4	B5	P2	..
DPB=3 buffer		I0	P0	P0	P0	P1	P1	P1	P2	P2	P2	..
(do DPB=3.5 in similar			I0	I0	I0	P0	P0	P0	P1	P1	P1	..
way to 3 & 2.5)						I0	I0	I0	hP0	hP0	hP0	..
									hI0	hI0	hI0	..

FIG. 7

potential resolution reduction drift for decoded frames >= P2 (with Bluray restrictions). Without Bluray restrictions, for decoded frames >=B2.

Method: dynamically reduce oldest half-horizontal resolution					H.264 'IBBP-frame stream', 4 ref. frames.							
decode	I0	P0	B0	B1	P1	B2	B3	P2	B4	B5	P3	..
display (delayed)		I0	B0	B1	P0	B2	B3	P1	B4	B5	P2	..
DPB=2.5		I0	P0	P0	P0	P1	P1	P1	P2	P2	P2	..
			I0	I0	I0	P0	P0	P0	hP1	hP1	hP1	..
						hI0	hI0	hI0	hP0	hP0	hP0	..
									hI0	hI0	hI0	..

FIG. 8

Resolution reduction drift for >=I0 for all examples. Reference frame drift as for 'discard oldest' example.

Method: reduce all half-horizontal resolution & discard oldest						H.264 'IBBP-frame stream', 4 ref. frames.						
decode	I0	P0	B0	B1	P1	B2	B3	P2	B4	B5	P3	..
delayed display		I0	B0	B1	P0	B2	B3	P1	B4	B5	P2	..
rec. min DPB=1		hI0	hP0	hP0	hP0	hP1	hP1	hP1	hP2	hP2	hP2	..
			hI0	hI0	hI0	hP0	hP0	hP0	hP1	hP1	hP1	..
DPB>=1.5						hI0	hI0	hI0	hP0	hP0	hP0	..
DPB==2									hI0	hI0	hI0	..

FIG. 9

Method: discard oldest						IBrBPBrBP.. frame stream, 4 ref. frames.							
decode	I0	P0	Br0	B0	P1	Br1	B1	P2	Br2	B2	P3	..	RF DRIFT
display (delayed)		I0	Br0	B0	P0	Br1	B1	P1	Br2	B2	P2	..	
Rec. min. DPB=2		I0	P0	Br0	P0	P1	Br1	P1	P2	Br2	P2	..	
			I0	P0	I0	P0	P1	P0	P1	P2	P1	..	
DPB>=3 buffer				I0		I0	P0	I0	P0	P1	P0	..	
DPB==4 buffer							I0		I0	P0		..	No drift

FIG. 10

Min temp accumulation then *oldest*						IBrBPBrBP.. frame stream, 4 ref. frames.							
Decode	I0	P0	Br0	B0	P1	Br1	B1	P2	Br2	B2	P3	..	RF DRIFT
display (delayed)		I0	Br0	B0	P0	Br1	B1	P1	Br2	B2	P2	..	
DPB=3		I0	P0	Br0	P0	P1	hBr1	P1	P2	Br2	P2	..	
			I0	P0	I0	P0	P1	P0	P1	P2	P1	..	
				I0		I0	P0	hI0	hP0	hP1	hP0	..	
							hI0		hI0	hP0		..	

FIG. 11

Reduce all half-horizontal resolution & discard oldest		IBrBPBrBP.. frame stream, 4 ref. frames.											
Decode	I 0	P0	Br0	B0	P1	Br1	B1	P2	Br2	B2	P3	..	RF DRIFT
display (delayed)		hI0	hBr0	hB0	hP0	hBr1	hB1	hP1	hBr2	hB2	hP2	..	
Rec. min.		hI0	hP0	hBr0	hP0	hP1	hBr1	hP1	hP2	hBr2	hP2	..	
DPB=1			hI0	hP0	hI0	hP0	hP1	hP0	hP1	hP2	hP1	..	
DPB>=1.5				hI0		hI0	hP0	hI0	hP0	hP1	hP0	..	
DPB==2							hI0		hI0	hP0		..	none

FIG. 12

DPB=3: non-Bluray: RF drift potential after B2. Blu-ray: after P2.

Method: discard oldest			H.264 'IBBrBP-frame stream', 4 ref. frames.												
decode	I0	P0	Br0	B0	B1	P1	Br1	B2	B3	P2	Br2	B4	B5	P3	..
display (dly)			I0	B0	Br0	B1	P0	B2	Br1	B3	P1	B4	Br2	B5	P2 ..
Rec.		I0	P0	Br0	Br0	B1	P1	Br1	Br1	B3	P2	Br2	Br2	B5	..
min.			I0	P0	P0	P0	P0	P1	P1	P1	P1	P2	P2	P2	..
DPB=3				I0	I0	I0	I0	P0	P0	P0	P0	P1	P1	P1	..
DPB=4								I0	I0	I0	I0	P0	P0	P0	No drift

FIG. 13

potential resolution reduction drift for decoded frames >= P2 (with Bluray restrictions). Without Bluray restrictions, for decoded frames >=B2.

dynamically reduce *oldest* half-horizontal resolution					H.264 'IBBrBP-frame stream', 4 ref. frames.										
Decode	I0	P0	Br0	B0	B1	P1	Br1	B2	B3	P2	Br2	B4	B5	P3	..
display (dly)			I0	B0	Br0	B1	P0	B2	Br1	B3	P1	B4	Br2	B5	..
DPB=3.5		I0	P0	Br0	Br0	B1	P1	Br1	Br1	B3	P2	Br2	Br2	B5	..
			I0	P0	P0	P0	P0	P1	P1	P1	P1	P2	P2	P2	..
				I0	I0	I0	I0	P0	P0	P0	P0	P1	P1	P1	..
								hI0	hI0	hI0	hI0	hP0	hP0	hP0	..

FIG. 14

Note: no drift in P-frames. Only in B-frames. No accumulation past a P-frame in this example. Note: this example can be done without dynamic memory reduction. Ie. sub-sampled storage is enough. Note for DPB=3.5 hI0 is only used for Br2 decode ie. won't accumulate far.

half-horizontal resolution: min temporal errors *accumulation/drift*								H.264 'IBBrBP-frame stream', 4 ref. frames.							
Decode	I0	P0	Br0	B0	B1	P1	Br1	B2	B3	P2	Br2	B4	B5	P3	..
display (dly)			I0	B0	Br0	B1	P0	B2	hBr1	hB3	P1	B4	hBr2	hB5	..
DPB=3.5		I0	P0	Br0	Br0	B1	P1	**hBr1**	**hBr1**	**hB3**	P2	**hBr2**	**hBr2**	**hB5**	..
			I0	P0	P0	P0	P0	P1	P1	P1	P1	P2	P2	P2	..
				I0	I0	I0	I0	P0	P0	P0	P0	P1	P1	P1	..
								I0	I0	I0	**hI0**	P0	P0	P0	..

FIG. 15

Min temporal *accumulation/drift then oldest*								H.264 'IBBrBP-frame stream', 4 ref. frames.							
decode	I0	P0	Br0	B0	B1	P1	Br1	B2	B3	P2	Br2	B4	B5	P3	..
display (dly)			I0	B0	Br0	B1	P0	B2	**hBr1**	**hB3**	P1	B4	**hBr2**	**hB5**	..
DPB=3		I0	P0	Br0	Br0	B1	P1	hBr1	hBr1	hB3	P2	hBr2	hBr2	hB5	..
			I0	P0	P0	P0	P0	P1	P1	P1	P1	P2	P2	P2	..
				I0	I0	I0	I0	P0	P0	P0	**hP0**	P1	P1	P1	..
								hI0	**hI0**	**hI0**	**hI0**	**hP0**	**hP0**	**hP0**	..

FIG. 16

Resolution reduction drift for >=I0 for all examples. Reference frame drift as for 'discard oldest' example.

Method: reduce all half-horizontal resolution & discard						H.264 'IBBrBP-frame stream', 4 ref. frames.									
Decode	I0	P0	Br0	B0	B1	P1	Br1	B2	B3	P2	Br2	B4	B5	P3	..
display (dly)			hI0	B0	hBr0	hB1	hP0	B2	hBr1	hB3	hP1	B4	hBr2	hB5	..
Rec.		hI0	hP0	hBr0	hBr0	hB1	hP1	hBr1	hBr1	hB3	hP2	hBr2	hBr2	hB5	..
min.			hI0	hP0	hP0	hP0	hP0	hP1	hP1	hP1	hP1	hP2	hP2	hP2	..
DPB=1.5				hI0	hI0	hI0	hI0	hP0	hP0	hP0	hP0	hP1	hP1	hP1	..
DPB==2								hI0	hI0	hI0	hI0	hP0	hP0	hP0	..

FIG. 17

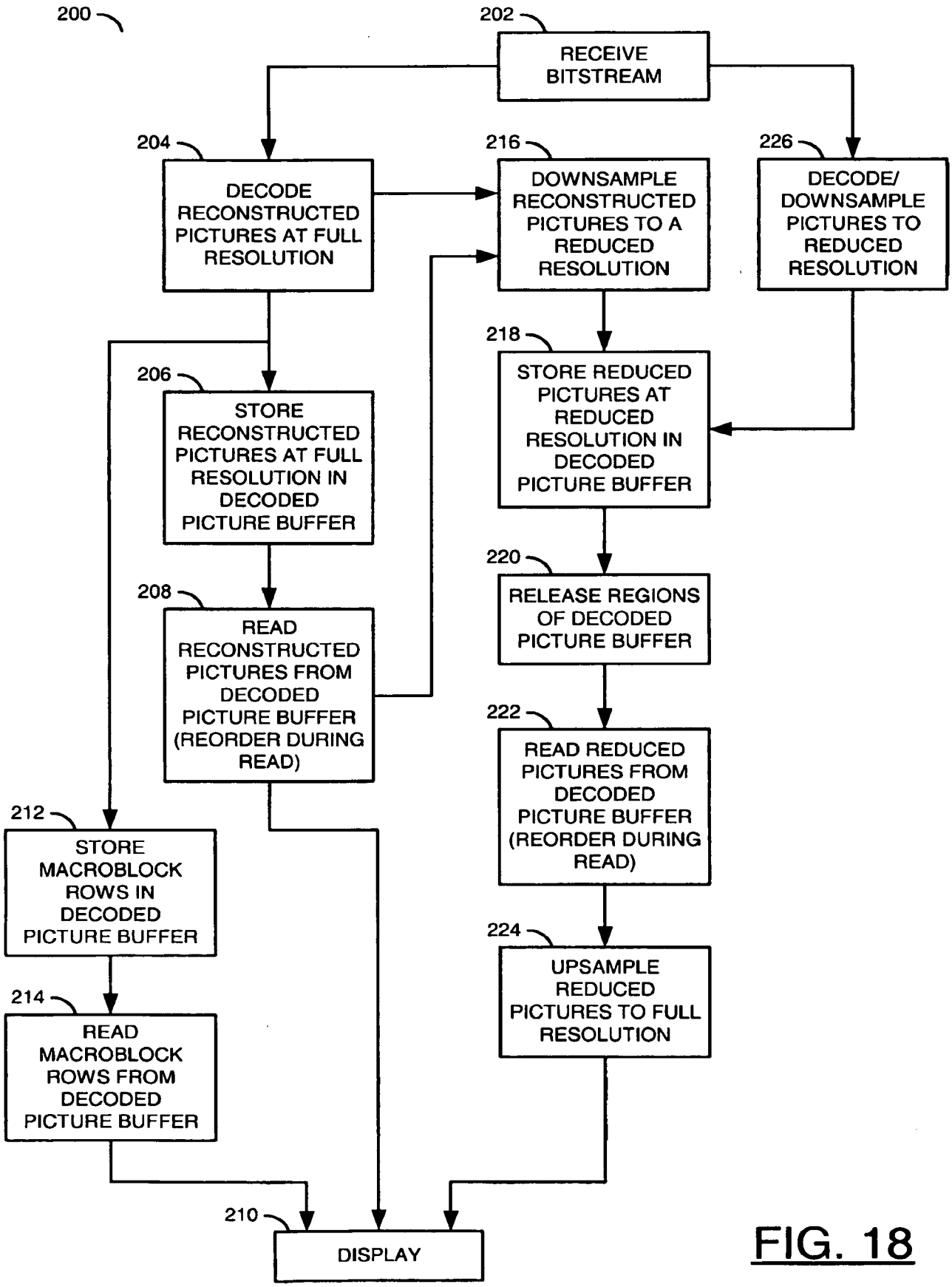
200
202
RECEIVE BITSTREAM
204
DECODE RECONSTRUCTED PICTURES AT FULL RESOLUTION
216
DOWNSAMPLE RECONSTRUCTED PICTURES TO A REDUCED RESOLUTION
226
DECODE/ DOWNSAMPLE PICTURES TO REDUCED RESOLUTION
206
STORE RECONSTRUCTED PICTURES AT FULL RESOLUTION IN DECODED PICTURE BUFFER
218
STORE REDUCED PICTURES AT REDUCED RESOLUTION IN DECODED PICTURE BUFFER
208
READ RECONSTRUCTED PICTURES FROM DECODED PICTURE BUFFER (REORDER DURING READ)
220
RELEASE REGIONS OF DECODED PICTURE BUFFER
222
READ REDUCED PICTURES FROM DECODED PICTURE BUFFER (REORDER DURING READ)
212
STORE MACROBLOCK ROWS IN DECODED PICTURE BUFFER
224
UPSAMPLE REDUCED PICTURES TO FULL RESOLUTION
214
READ MACROBLOCK ROWS FROM DECODED PICTURE BUFFER
210
DISPLAY

FIG. 18

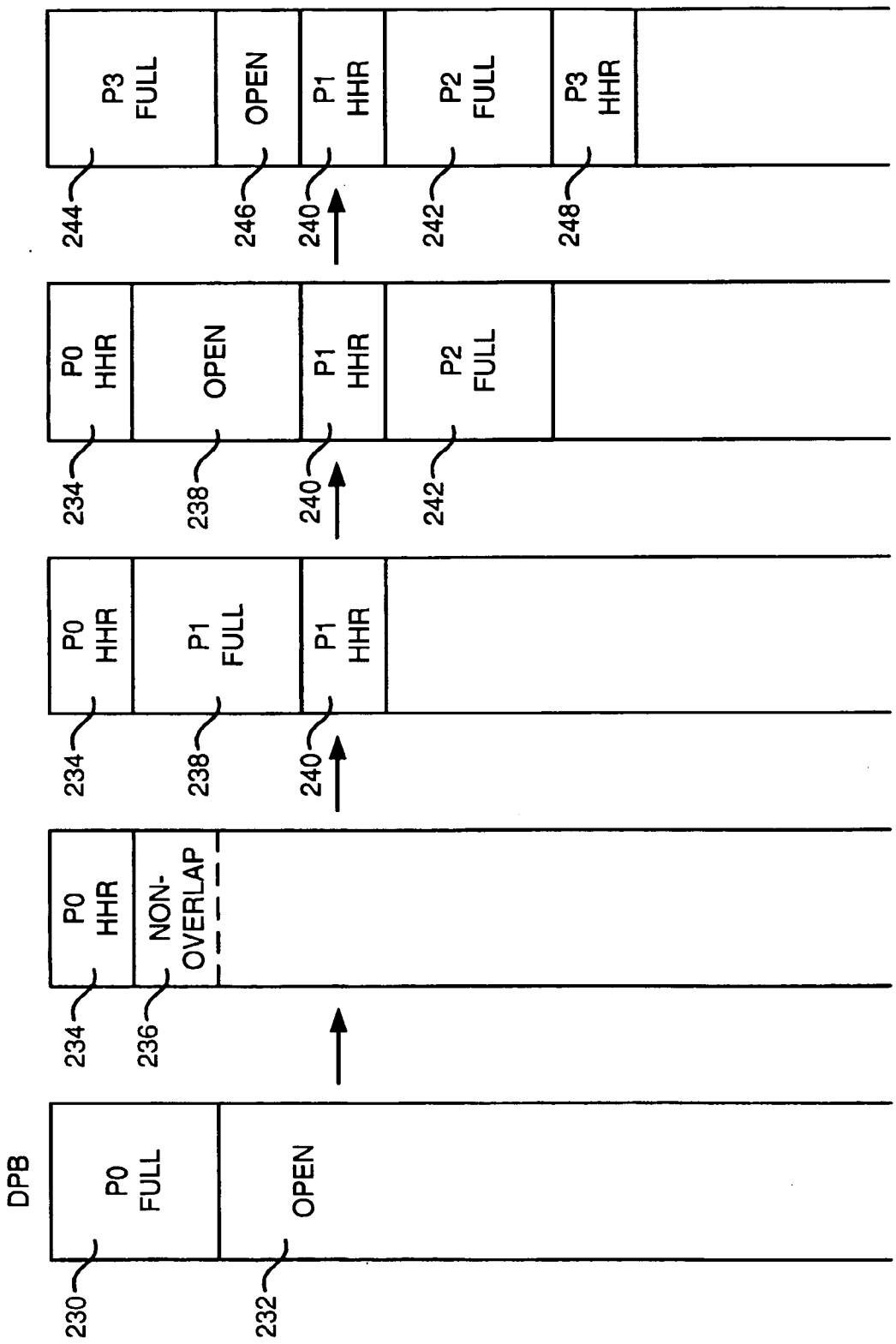
DPB
P0 FULL
OPEN
P0 HHR
NON-OVERLAP
P0 HHR
P1 FULL
P1 HHR
P0 HHR
OPEN
P1 HHR
P2 FULL
P3 FULL
OPEN
P1 HHR
P2 FULL
P3 HHR
230
232
234
236
238
240
242
244
246
248

FIG. 19

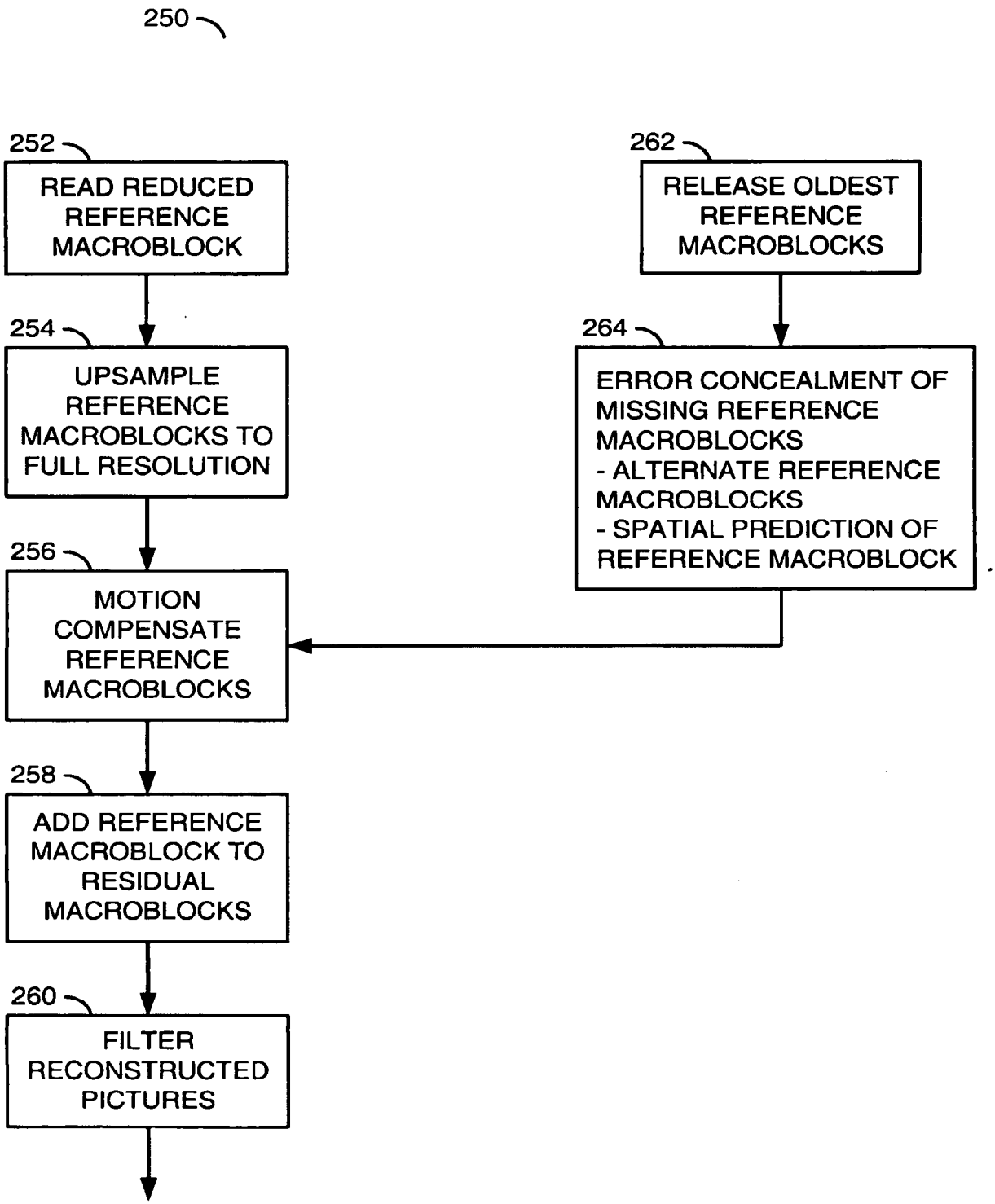
250
252
READ REDUCED REFERENCE MACROBLOCK
254
UPSAMPLE REFERENCE MACROBLOCKS TO FULL RESOLUTION
256
MOTION COMPENSATE REFERENCE MACROBLOCKS
258
ADD REFERENCE MACROBLOCK TO RESIDUAL MACROBLOCKS
260
FILTER RECONSTRUCTED PICTURES
262
RELEASE OLDEST REFERENCE MACROBLOCKS
264
ERROR CONCEALMENT OF MISSING REFERENCE MACROBLOCKS
- ALTERNATE REFERENCE MACROBLOCKS
- SPATIAL PREDICTION OF REFERENCE MACROBLOCK

FIG. 20

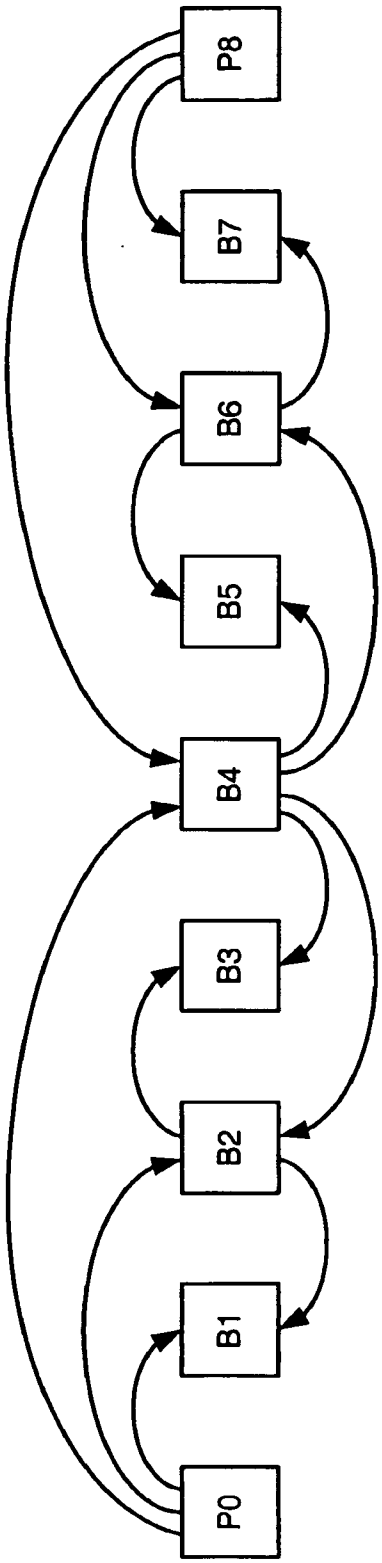

FIG. 21