(12) INTERNATIONAL APPLICATION PUBLISHED UNDER THE PATENT COOPERATION TREATY (PCT)

(19) World Intellectual Property Organization
International Bureau

(43) International Publication Date
12 January 2017 (12.01.2017)

WIPO | PCT

(10) International Publication Number
WO 2017/007429 A1

(51) International Patent Classification:
H01R 12/71 (2011.01)

(21) International Application Number:
PCT/SG2016/050317

(22) International Filing Date:
7 July 2016 (07.07.2016)

(25) Filing Language: English

(26) Publication Language: English

(30) Priority Data:
10201505358W 7 July 2015 (07.07.2015) SG

(71) Applicants: **AMPHENOL FCI ASIA PTE. LTD.** [SG/SG]; 80 Robinson Road, #02-00, Singapore 068898 (SG). **AMPHENOL FCI CONNECTORS SINGAPORE PTE. LTD.** [—/SG]; 80 Robinson Road, #02-00, Singapore 068898 (SG). **KAJIURA, Motomu**; 18-9 Ikegami 6-Chome Oota-ku, Tokyo 146-0082 (JP). **MOTOYAMA, Masahiko**; 69-6, Arai-Cho Hodogaya-ku, Yokohama-shi, Kanagawa, 240-0053 (JP).

(72) Inventor: **SASAME, Naotaka**; 2-17-14 Negishi Minami-ku Saitama-shi, Saitama, 336-0024 (JP).

(74) Agent: **CHINA SINDA INTELLECTUAL PROPERTY PTE LTD**; 133 Cecil Street, #12-01A, Keck Seng Tower, Singapore 069535 (SG).

(81) Designated States *(unless otherwise indicated, for every kind of national protection available)*: AE, AG, AL, AM, AO, AT, AU, AZ, BA, BB, BG, BH, BN, BR, BW, BY, BZ, CA, CH, CL, CN, CO, CR, CU, CZ, DE, DK, DM, DO, DZ, EC, EE, EG, ES, FI, GB, GD, GE, GH, GM, GT, HN, HR, HU, ID, IL, IN, IR, IS, JP, KE, KG, KN, KP, KR, KZ, LA, LC, LK, LR, LS, LU, LY, MA, MD, ME, MG, MK, MN, MW, MX, MY, MZ, NA, NG, NI, NO, NZ, OM, PA, PE, PG, PH, PL, PT, QA, RO, RS, RU, RW, SA, SC, SD, SE, SG, SK, SL, SM, ST, SV, SY, TH, TJ, TM, TN, TR, TT, TZ, UA, UG, US, UZ, VC, VN, ZA, ZM, ZW.

[Continued on next page]

WO 2017/007429 A1

(54) Title: ELECTRICAL CONNECTOR

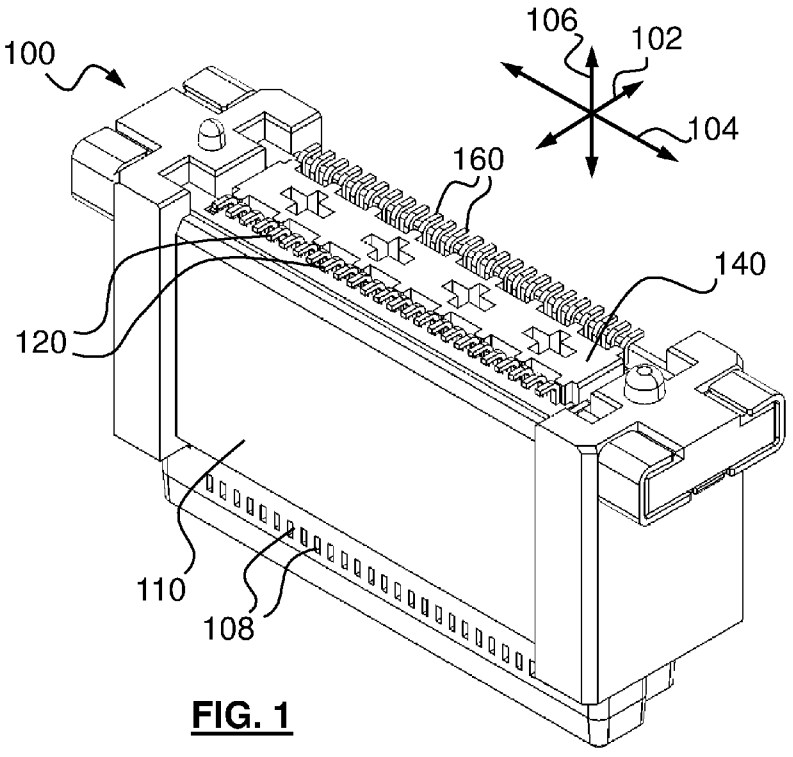

FIG. 1

[Continued on next page]

(84) Designated States *(unless otherwise indicated, for every kind of regional protection available)*: ARIPO (BW, GH, GM, KE, LR, LS, MW, MZ, NA, RW, SD, SL, ST, SZ, TZ, UG, ZM, ZW), Eurasian (AM, AZ, BY, KG, KZ, RU, TJ, TM), European (AL, AT, BE, BG, CH, CY, CZ, DE, DK, EE, ES, FI, FR, GB, GR, HR, HU, IE, IS, IT, LT, LU, LV, MC, MK, MT, NL, NO, PL, PT, RO, RS, SE, SI, SK, SM, TR), OAPI (BF, BJ, CF, CG, CI, CM, GA, GN, GQ, GW, KM, ML, MR, NE, SN, TD, TG).

Published:

— *with international search report (Art. 21(3))*

(57) Abstract: An electrical connector includes a housing, first and second sets of terminals and a spacer. The housing has a first sidewall, a second sidewall spaced apart from the first sidewall and a cavity between the first and second sidewalls. The first set of terminals is disposed in the cavity adjacent to the first sidewall. The second set of terminals is disposed in the cavity adjacent to the second sidewall. The spacer is disposed in the cavity between the first and second sets of terminals.

ELECTRICAL CONNECTOR

Field of the Invention

The present invention relates to an electrical connector, and more particularly relates to an electrical board connector.

Background

Electrical connectors are widely used in electrical systems for data communication, data storage, data transmission and the like. Board connectors have been used to establish electrical connections between printed circuit boards (PCBs) to which plug connector and counterpart receptacle connector are mounted respectively.

Summary

According to an embodiment, an electrical connector includes a housing, first and second sets of terminals and a spacer. The housing has a first sidewall, a second sidewall spaced apart from the first sidewall and a cavity between the first and second sidewalls. The first set of terminals is disposed in the cavity adjacent to the first sidewall. The second set of terminals is disposed in the cavity adjacent to the second sidewall. The spacer is disposed in the cavity between the first and second sets of terminals.

Other aspects and advantages of the present invention will become apparent from the following detailed description, illustrating by way of example the inventive concept of the present invention.

BRIEF DESCRIPTION OF THE DRAWINGS

Embodiments of the invention are disclosed hereinafter with reference to the drawings, in which:

Fig. 1 is a perspective view of an electrical connector in accordance with one embodiment of the present invention;

Fig. 2 is a perspective view of a counterpart connector for connecting to the board connector shown in Fig. 1;

Fig. 3 is a front view of Fig. 1;

Fig. 4 is a top view of Fig. 1;

Fig. 5 is an exploded perspective view of the electrical connector shown in Fig. 1;

Fig. 6 is a perspective top view showing the spacer of the electrical connector of Fig. 1;

Fig. 7 is a perspective bottom view showing the spacer of Fig. 6;

Fig. 8 is a perspective view showing the first set of terminals of the electrical connector of Fig. 1;

Fig. 9 is a perspective view the first set of terminals of Fig. 8 from another viewing angle;

Fig. 10 is a cross sectional perspective view of the electrical connector shown in Fig. 3 along A-A,

Fig. 11 cross sectional perspective view of the electrical connector shown in Fig. 3 along B-B;

Fig. 12 is a perspective view of showing the first and second sets of terminals of the electrical connector shown in Fig. 10;

Fig. 13 is a perspective view of showing the housing of the electrical connector shown in Fig. 10;

Fig. 14 is an enlarged view of portion 10A of Fig. 10;

Fig. 15 is an enlarged view of portion 11A of Fig. 11;

Fig. 16 is a cross sectional perspective view of the electrical connector shown in Fig. 3 along C-C,

Fig. 17A is a perspective view showing a fixing tab of electrical connector of Fig. 16;

Fig. 17B is an enlarged view of portion 16A of Fig. 16;

Fig. 18 is a cross sectional perspective view of the electrical connector shown in Fig. 3 along D-D,

Fig. 19 is an enlarged view of portion 18A of Fig. 18;

Fig. 20 is a cross sectional perspective view of the electrical connector shown in Fig. 4 along E-E;

Fig. 21 is a perspective view of an electrical connector in accordance with another embodiment of the present invention;

Fig. 22 is a front view of Fig. 21;

Fig. 23 is an exploded perspective view of the electrical connector shown in Fig. 21;

Fig. 24 is a cross sectional perspective view of the electrical connector shown in Fig. 22 along F-F;

Fig. 25 is a cross sectional perspective view of the electrical connector shown in Fig. 22 along G-G;

Fig. 26 is a cross sectional perspective view of the electrical connector shown in Fig. 22 along H-H;

Detailed description

As shown in Figs. 1 to 5, an electrical connector 100 includes a housing 110, a first set of terminals 120, a second set of terminals 160 and a spacer 140. Housing 110 has a first sidewall 112 and a second sidewall 116 spaced apart from first sidewall 112, forming a cavity 114 between first and second sidewalls 112, 116. First set of terminals 120 is disposed in cavity 114 and adjacent to first sidewall 112. Second set of terminals 160 is disposed in cavity 114 and adjacent to second sidewall 116. Spacer 140 is disposed in cavity 114 between first set of terminals 120 and second set of terminals 160. Housing 110 defines a depth direction 102, a width direction 104 perpendicular to depth direction 102 and a height direction 106 perpendicular to depth direction 102 and width direction 104.

As shown in Figs. 1, 3 and 4, first set of terminals 120 includes first signal pairs 123 and first ground terminals 122. Each of the first ground terminals 122 is disposed between adjacent first signal pairs 123. Second set of terminals 160 includes second signal pairs 165 and second ground terminals 166. Each of the second ground terminals 166 is disposed between adjacent second signal pairs 165. Housing 110 has windows 108 formed on first and second sidewalls 112, 116 (only windows 108 on first sidewall 112 are shown), corresponding to the positions of first and second signal pairs 123, 165. Spacer 140 is positioned closer to first and second ground terminals 122, 166 than to the first and second signal pairs 123, 165. Spacer 140 may be in contact with first and second ground terminals 122, 166 or alternatively, spacer 140 is spaced apart from the first and second ground terminals 122, 166 with an air gap. Windows 108 provide air space for first and second ground terminals 122, 166 which contributes to signal integrity performance of electrical connector 100.

Spacer 140 is electrically coupled to first and second ground terminals 122, 166 to serve as a resonant damping component to improve signal integrity of electrical connector 100.

First signal pairs 123 and first ground terminals 122 may be disposed in a first plane. Second signal pairs 165 and second ground terminals 166 may be disposed in a second plane. As shown in Figs. 6 and 7, Spacer 140 has a base 141. At one side of base 141 there are formed first ridges 142 projecting from base 141 and facing first set of terminals 120. At an opposite side of base 141 there are formed second ridges 146 projecting from base 141 and facing second set of terminals 160. Between adjacent first ridges 142 there is formed a first notch 143. Between adjacent second ridges 146 there is formed a second notch 145. Each of the first ridges 142 is in alignment with one of the first ground terminals 122 with respect to width direction 104 of housing 110. Each of the second ridges 146 is in alignment with one of the second ground terminals 166 with respect to width direction 104 of housing 110. Each of the first ridges 142 is in contact with one of the first ground terminals 122, each of the second ridges 166 is in contact with the one of the second ground terminals 166. Alternatively, each of the first ridges 142 is spaced apart from one of the first ground terminals 122 with an air gap, and each one of the second ridges 146 is spaced apart from one of the second ground terminals 166 with an air gap.

In one embodiment, as shown with further details in Figs. 6 to 20, electrical connector 100 includes a first frame 130 and a second frame 150. First frame 130 is molded to and supporting first set of terminals 120, to form a first Insert-Molded Leadframe Assembly (IMLA) 120a. Second frame 150 is molded to and supporting second set of terminals 160, to form a first Insert-Molded Leadframe Assembly (IMLA) 160a. First and second IMLAs 120a, 106a have symmetrical structures and dimensions, hence illustrations and references made in the context to one of the IMLAs applies to those made to the other one of the IMLAs, in conduction with Figs. 8 and 9. First frame 130 is disposed between first sidewall 112 of housing 110 and spacer 140. Second frame 150 is disposed between second sidewall 116 of housing 110 and spacer 140.

As shown in Figs. 8 and 9, first frame 130 has side columns 137 and first protuberances 133 facing spacer 140 and notches 132 between protuberances 133. Second frame 150 has second columns 153 and second protuberances 155 facing spacer 140, and notches 156 between protuberances 155. Each one of the first ridges 142 of spacer 140 is disposed in one of the first notches 132, each one of the second ridges 146 of spacer 140 is disposed in one of the second notches 156. Each one of the first and second protuberances 133, 155 is received between adjacent first and second ridges 143, 145 of spacer 140, respectively. First columns 137 and first protuberances 133 form a first recess 139 on first IMLA 120a, facing spacer 140. Likewise second columns 153 and second protuberances 155 form a second recess 151 on second IMLA 160a, facing spacer 140. The segment of first set of terminals 120 within first recess 139 are dented with respect to first columns 137 and first protuberances 133, and the segment of second set of terminals 160 within second recess 151 are dented with respect to second columns 153 and second protuberances 155. As such, there is formed an air gap between the first set of terminals 120 and spacer 140, and an air gap between the second set of terminals 160 and spacer 140. The air gaps serve to improve signal integrity performance between the signal contacts and spacer 140.

First frame 130 has first ribs 131 facing first sidewall 112 of housing 110. Second frame 150 has second ribs 157 facing second sidewall 116 of housing 110. First ribs 131 separate first set of terminals 120 from first sidewall 112 of housing 110. Second ribs 157 separate second set of terminals160 from second sidewall 116 of housing 110.

Between first ribs 131 there are formed first openings 1302 through which first set of terminals 120 are partially exposed. Between second ribs 157 there are formed second openings 1508 through which second set of terminals 160 are partially exposed.

As shown in Figs. 10 to 15, first set of terminals 120 is positioned with a distance 120d from first sidewall 112 of housing 110. Second set of terminals 160 is positioned with a distance 160d from second sidewall 116 of housing 110. First and second openings 1302, 1508 are formed for insert molding process of producing IMPAs 120a, 160a.

Figs. 14 and 15 shows the positional relationship between spacer 140 and second ground terminals 166, and that between spacer 140 and second signal pairs 165. The positional relationship between spacer 140 and first ground terminals and first signal pairs is the same. As shown in Figs. 14 and 15, a distance between second ridge 146 of spacer 140 and a second ground terminal 166 is denoted as distance 146d. A distance between second notch 145 and a second signal pair 165 is denoted as distance 145d, in which, distance 145d is greater than distance 146d. Another words, spacer 140 is positioned closer to first and second ground terminals 122, 166 of first and second set of terminals 120, 160 to effect electrical coupling between spacer 140 and first and second ground terminals 122, 166 and achieve signal integrity improvement.

As shown in Figs. 16 and 17A and 17B, electrical connector 100 includes a pair of fixing tabs 180 secured to housing 110 and engaged to spacer 140. Each of the first and second frames 130, 150 has a pair of grooves 138, 158 into which each one of the fixing tabs 180 is fitted. Each fixing tab 180 has barbs 186 biting into sidewalls 112, 116 of housing 110 such that fixing tabs 180 are securely fixed to housing 110. Each fixing tab 180 has a main body 181 and first and second bosses 182, 186 raised from main body 181. Main body 181 is received into grooves 138, 158 with first and second bosses 182, 186 forced into respective first and second frames 130, 150 in the first and second grooves 138, 158. Each fixing tab 180 has a middle portion 184 engaged to spacer 140 to fix spacer 140 to housing 110.

As shown in Figs. 18 to 20, connected to first and second sidewalls 112, 116 of housing 110 there is a partition 117 onto which spacer 140 is seated. Partition 117 has one or more recesses 118 formed thereon and accessible through cavity 114. Spacer 140 may include one or more pins 148 projecting downward from bottom surface thereof. Each pin 148 is received into a recess 118 such that movement of spacer 140 relative to housing 110 along depth direction 102 and width direction 104 is prevented.

In another embodiment, as shown in Figs. 21 to 26, an electrical connector 200 includes a housing 210, first and second sets of terminals 220, 260, and a spacer 240. Housing 210 has a first sidewall 212 and a second sidewall 216 spaced apart from first

sidewall 212, and a cavity 214 between first and second sidewalls 212, 216. First set of terminals 220 is disposed in cavity 214 adjacent to first sidewall 212, and second set of terminals 260 is disposed in cavity 214 adjacent to second sidewall 216. Spacer 240 is disposed in cavity 214 between first and second set of terminals 220, 260.

Electrical connector 200 is of a low-profile structure having a relatively smaller height dimension compared to that of the previous embodiment. First and second set of terminals 220, 260 are respectively attached to first and second sidewalls 212, 216 without additional support of a frame. First and second signal pairs 223, 265 are positioned in a relatively greater distance from spacer 240 and spacer 240 is electrically coupled to first and second ground terminals 222, 266 by being positioned closer to such ground terminals, via ridges 242, 246 projecting from spacer 240.

Similar to the previous embodiment, electrical connector 200 includes a pair of fixing tabs 280 fixed to housing 210 to secure spacer 240 to housing to ensure the correct positional relationship with first and second set of terminals 220, 260.

Although embodiments of the present invention have been illustrated in conjunction with the accompanying drawings and described in the foregoing detailed description, it should be appreciated that the present invention is not limited to the embodiments disclosed. Therefore, the present invention should be understood to be capable of numerous rearrangements, modifications, alternatives and substitutions without departing from the spirit of the invention as set forth and recited by the following claims.

CLAIMS

1. An electrical connector comprising:
a housing having a first sidewall, a second sidewall spaced apart from the first sidewall and a cavity between the first and second sidewalls;
a first set of terminals disposed in the cavity adjacent to the first sidewall;
a second set of terminals disposed in the cavity adjacent to the second sidewall;
a spacer disposed in the cavity between the first and second sets of terminals,

2. The electrical connector as recited in claim 1, wherein the first set of terminals comprises first signal pairs and first ground terminals, each one of the first ground terminals being disposed between adjacent first signal pairs, the second set of terminals comprises second signal pairs and second ground terminals, each one of the second ground terminals being disposed between adjacent second signal pairs, wherein the spacer being electrically coupled to the first and second ground terminals.

3. The electrical connector as recited in claim 2, wherein the spacer is positioned closer to the first and second ground terminals than to the first and second signal pairs.

4. The electrical connector as recited in claim 3, wherein the spacer is in contact with the first and second ground terminals.

5. The electrical connector as recited in claim 3, wherein the first signal pairs and first ground terminals are disposed in a first plane, the second signal pairs and second ground terminals are disposed in a second plane; the spacer comprising a base, first ridges projecting from the base toward the first sidewall of the housing, and second ridges projected from the base toward the second sidewall of the housing, each one of the first ridges being in alignment with one of the first ground terminals with respect to a width direction of the housing, each one of the second ridges being in

alignment with one of the second ground terminals with respect to a width direction of the housing.

6. The electrical connector as recited in claim 5, wherein each one of the first ridges is in contact with one of the first ground terminals, each one of the second ridges is in contact with the one of the second ground terminals.

7. The electrical connector as recited in claim 2, further comprising a first frame supporting the first set of terminals, a second frame supporting the second set of terminals, wherein the first frame being disposed between the first sidewall of the housing and the spacer, and the second frame being disposed between the second sidewall and the spacer.

8. The electrical connector as recited in claim 7, wherein the first frame having first protuberances facing the spacer and a first notch between adjacent protuberances, the second frame having second protuberances facing the spacer and a second notch between adjacent second protuberances, wherein one of the first ridges of the spacer is disposed in one of the first notches, one of the second ridges of the spacer is disposed in one of the second notches.

9. The electrical connector as recited in claim 8, wherein each one of the first and second protuberances being received between adjacent first and second ridges of the spacer respectively.

10. The electrical connector as recited in claim 9, wherein the first frame having first columns forming a first recess with the first protuberances, the second frame having second columns forming a second recess with the second protuberances, the first recess faces the spacer to form a first air gap between the first set of terminals and the spacer, and the second recess faces the spacer to form a second air gap between the second set of the terminals and the spacer.

11. The electrical connector as recited in claim 7, wherein the first frame having first ribs facing the first sidewall of the housing, the second frame having second ribs facing the second sidewall of the housing, the first ribs separate the first set of terminals from the first sidewall of the housing, the second ribs separate the second set of terminals and the second sidewall of the housing.

12. The electrical connector as recited in claim 7, further comprising a pair of fixing tabs secured to the housing and engaged to the spacer, wherein each of the first and second frames having a respective first and second pair of grooves into which each one of the fixing tabs is fitted.

13. The electrical connector as recited in claim 12, wherein each fixing tab having a main body and first and second bossed raised from the main body, the main body being fitted into the first and second grooves and the first and second bossed being forced into the respective first and second frames in the first and second grooves.

14. The electrical connector as recited in claim 2, wherein the housing further comprising windows on the first and second sidewalls thereof, each of the first and second signal pair includes two signal terminals, each window being positioned in alignment with one of the signal terminals to provide an air space thereto.

15. The electrical connector as recited in claim 1, further comprising a pair of fixing tabs secured to the housing and engaged to the spacer.

16. The electrical connector as recited in claim 1, wherein the housing comprising a partition connected to the first and second sidewalls, the partition has a recess formed thereon, the spacer having a pin received in the recess.

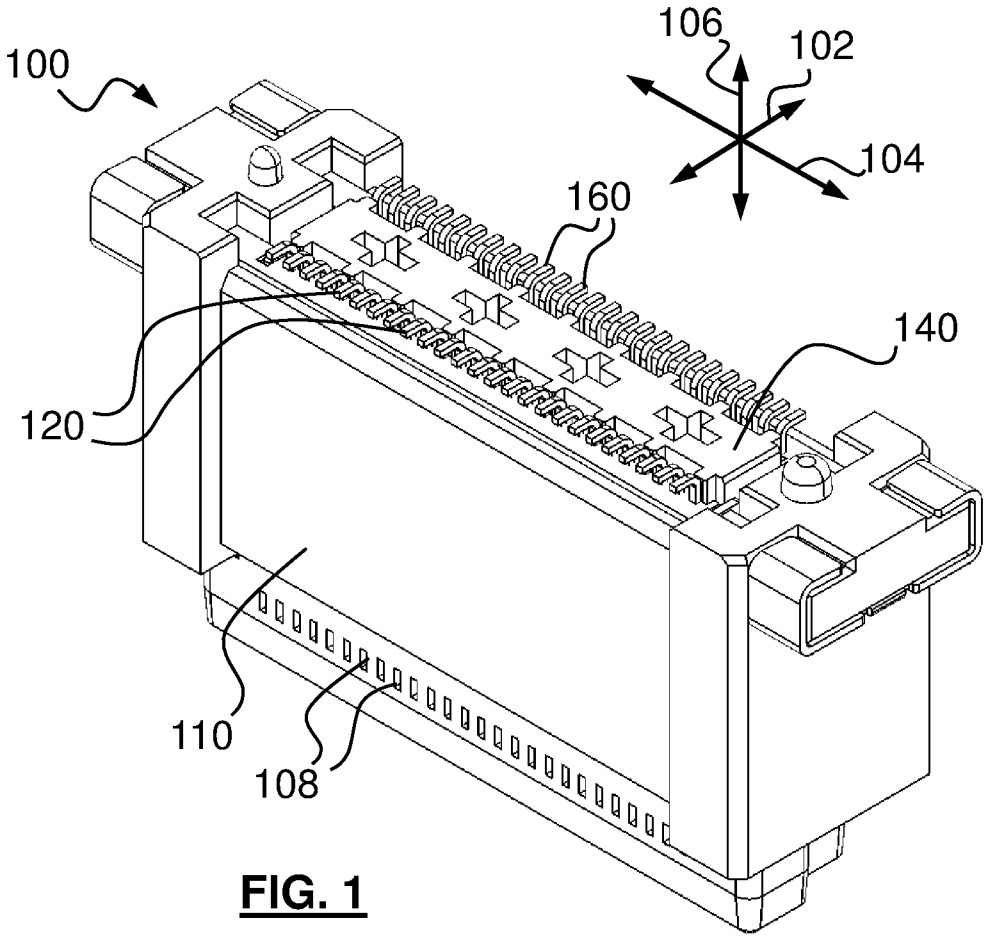

FIG. 1

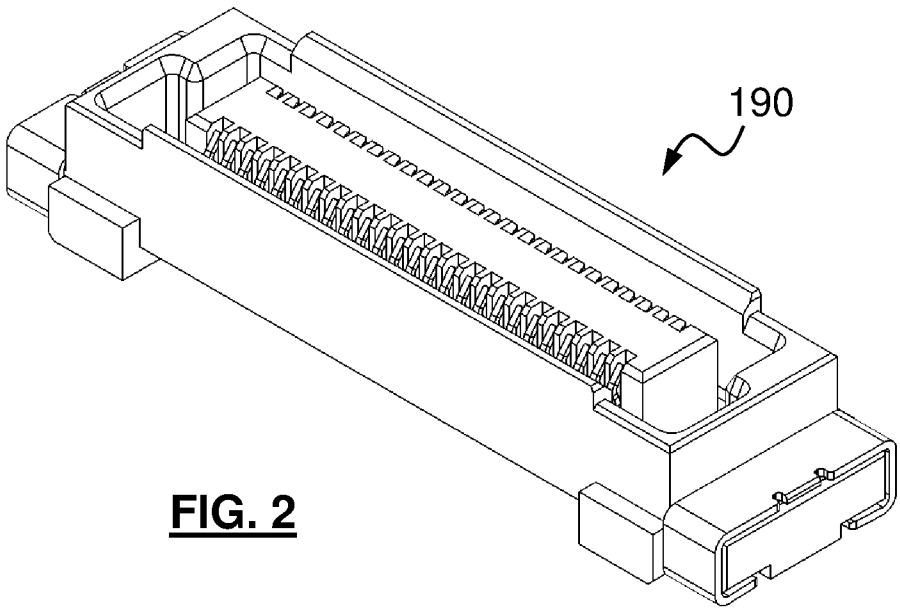

FIG. 2

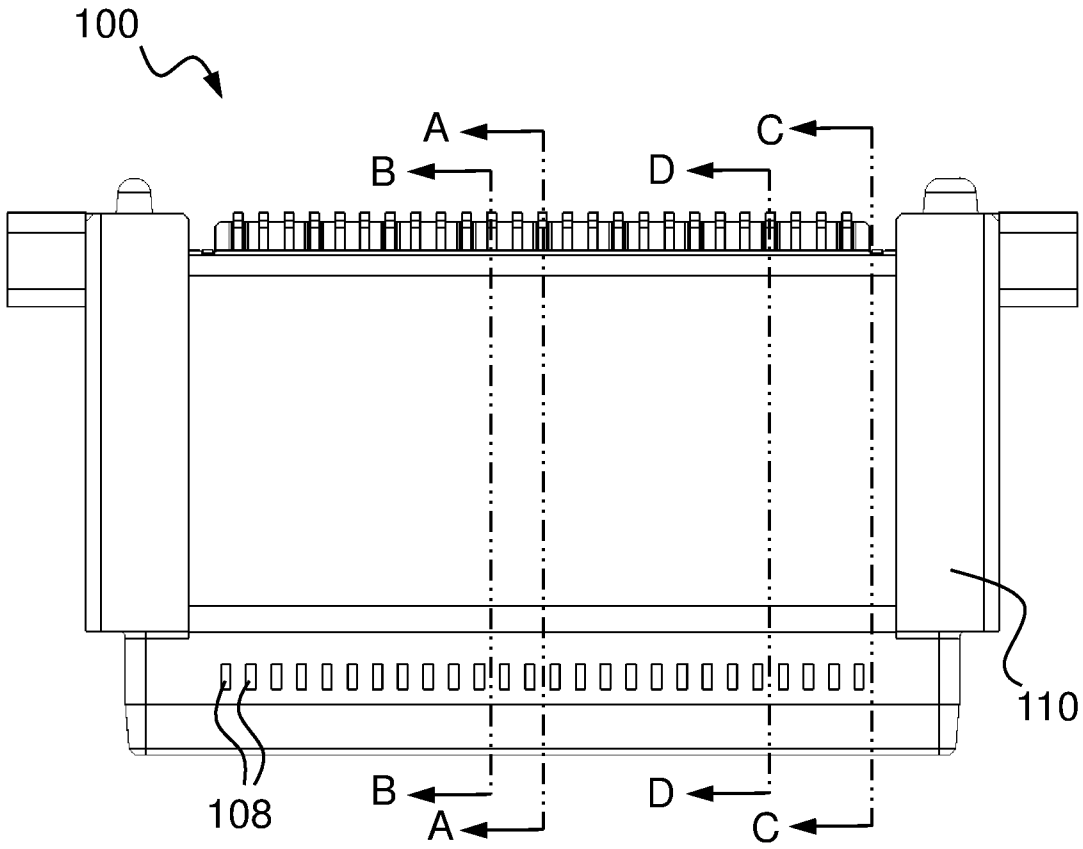
100
A
B
C
D
110
108
B
A
D
C

FIG. 3

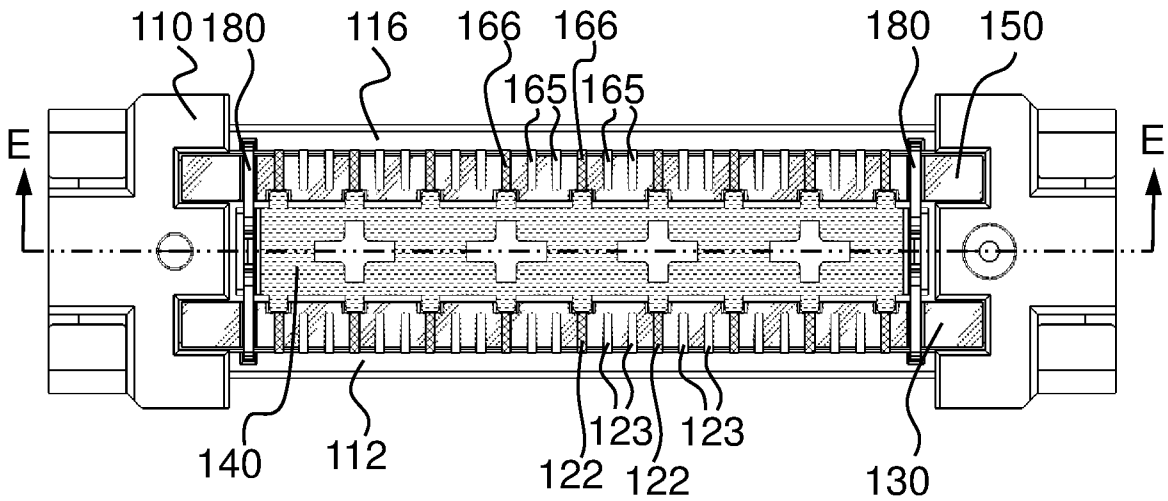
110
180
116
166
166
165
165
180
150
E
E
140
112
123
123
122
122
130

FIG. 4

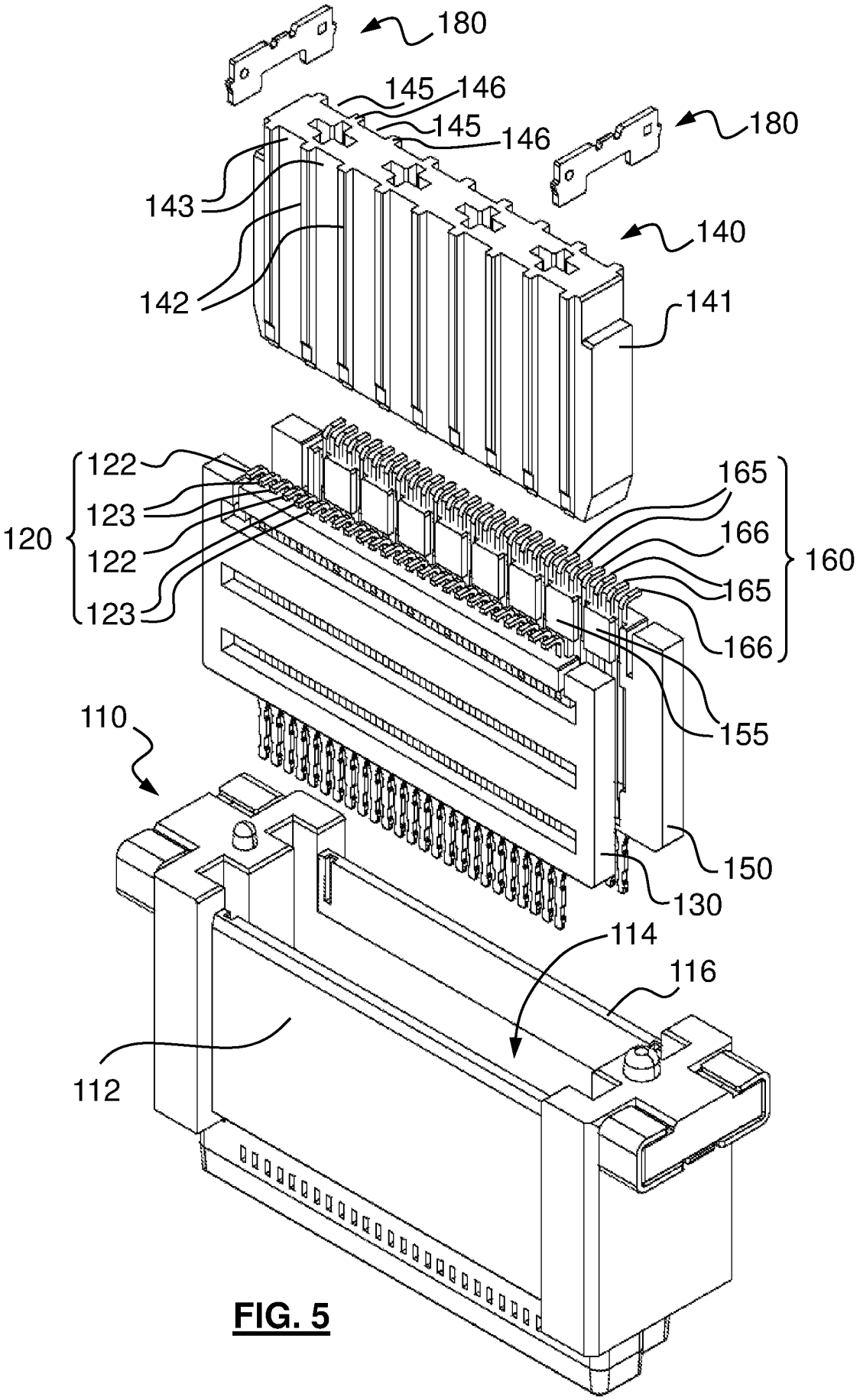
180
145
146
145
146
180
143
140
142
141
122
123
120
122
123
165
166
160
165
166
155
110
150
130
114
116
112

FIG. 5

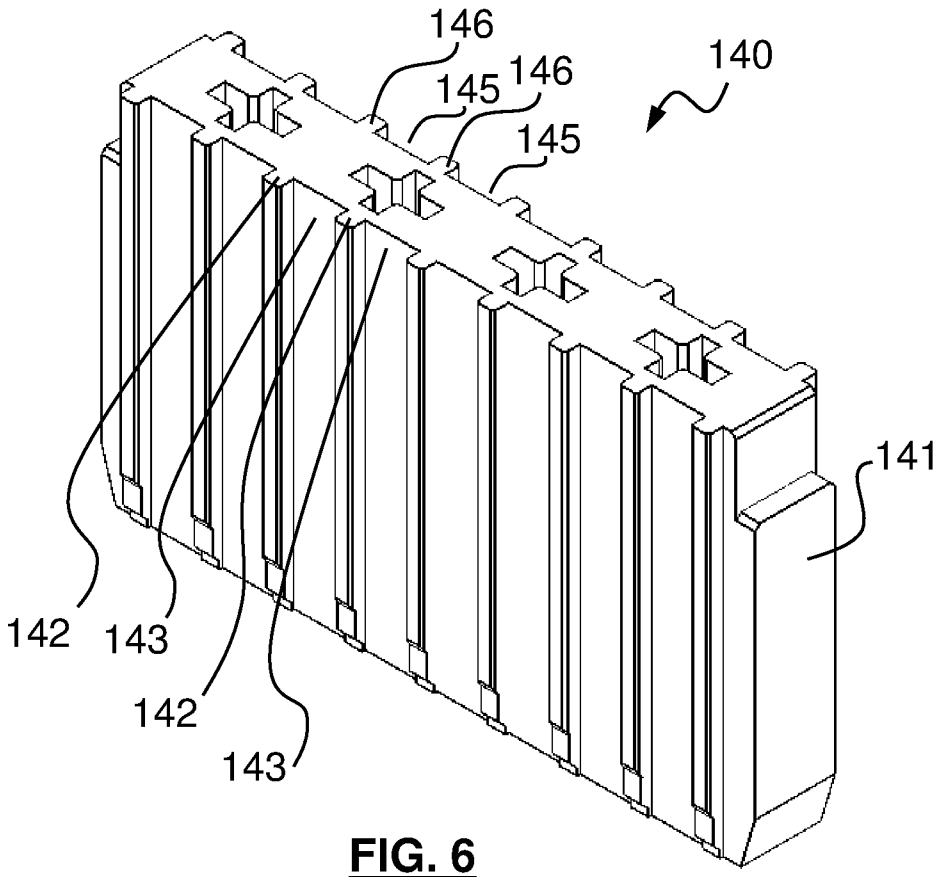

FIG. 6

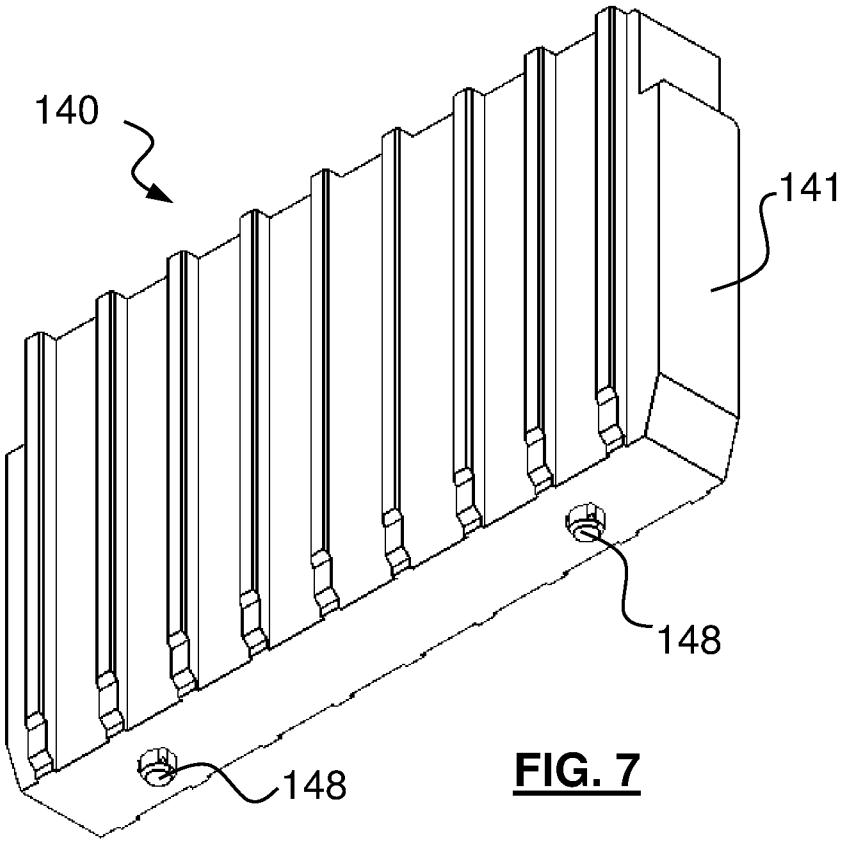

FIG. 7

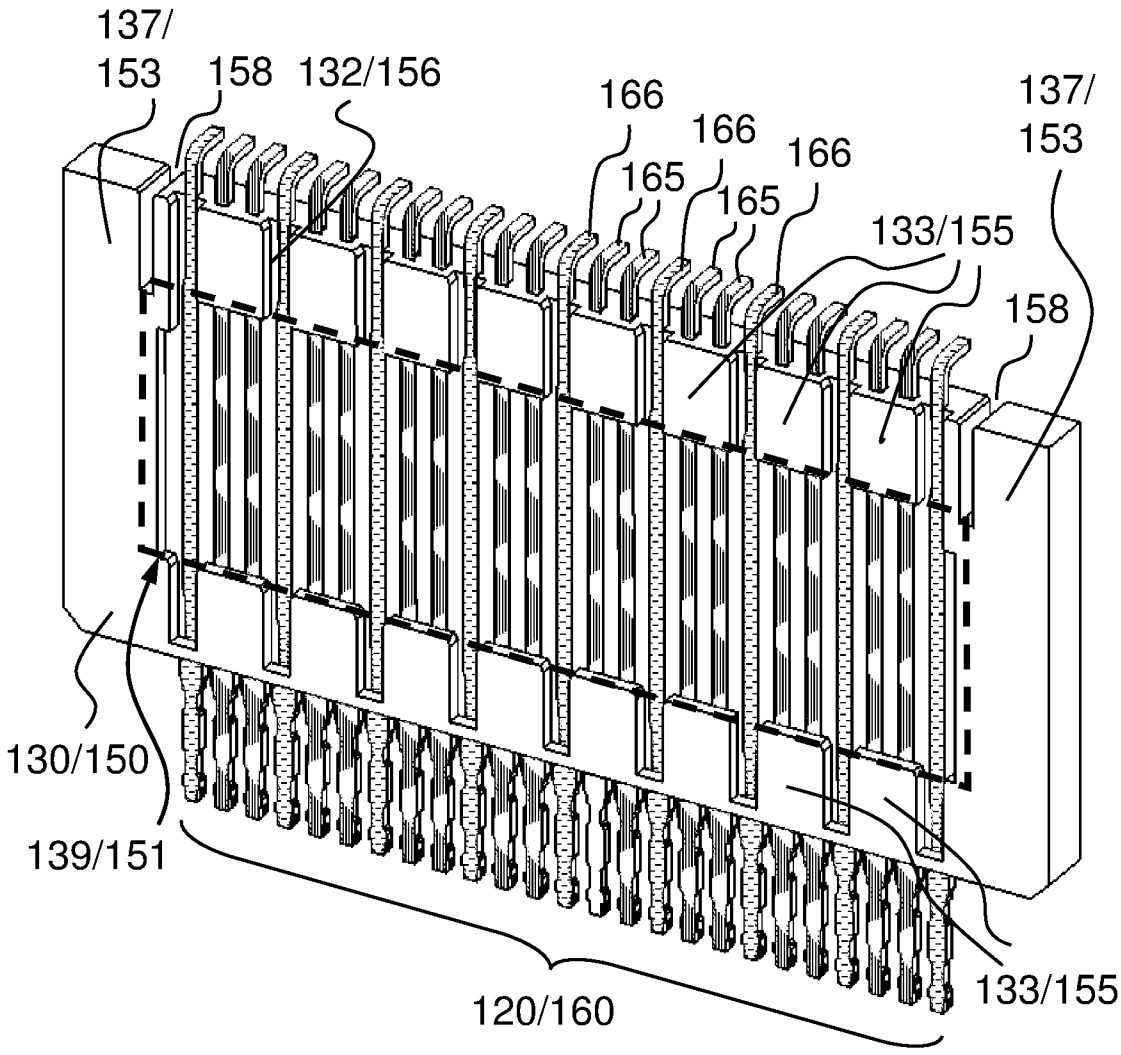
137/
153
158
132/156
166
166
166
165
165
133/155
158
137/
153
130/150
139/151
120/160
133/155

FIG. 8

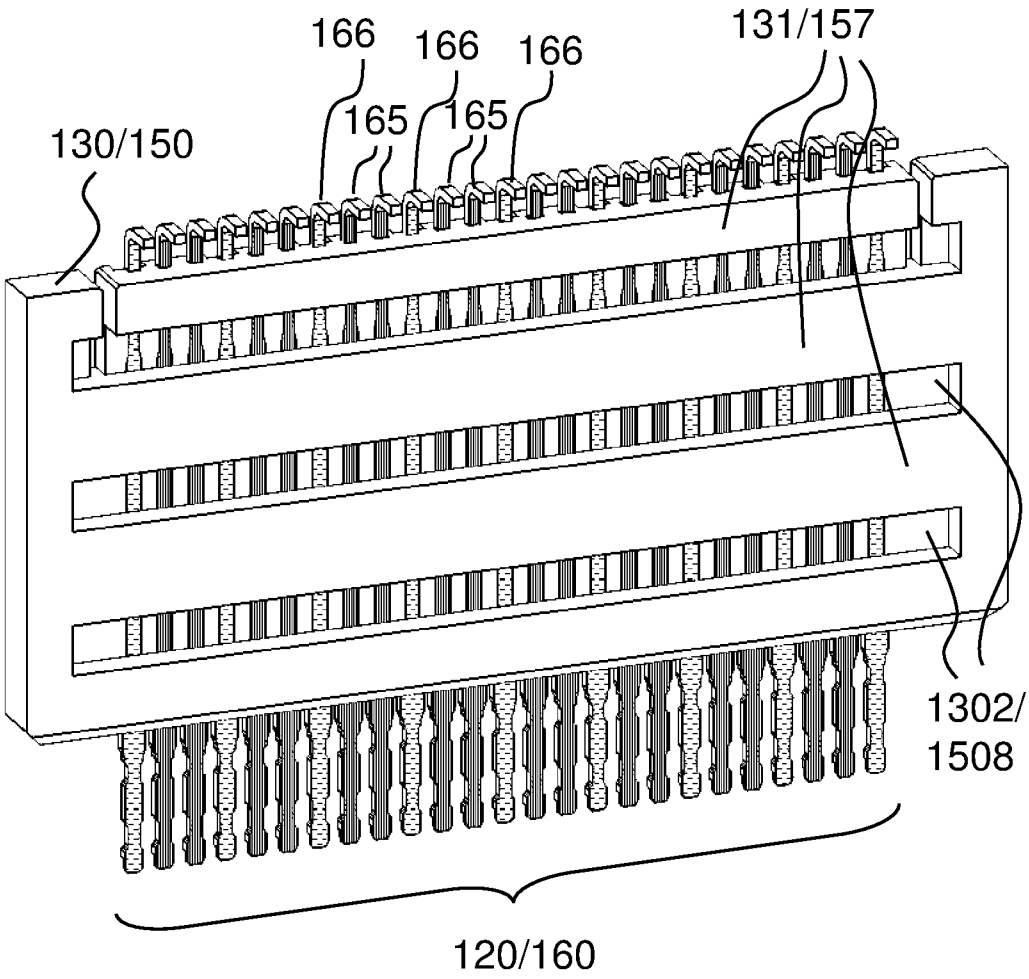

FIG. 9

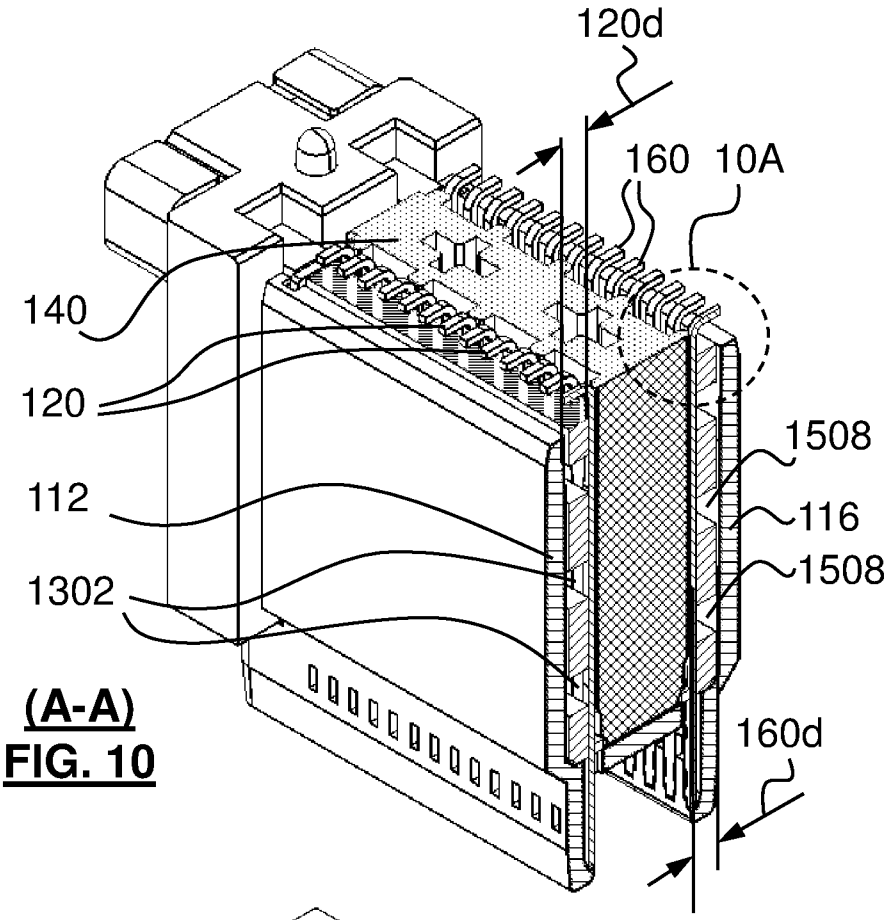

(A-A)
FIG. 10

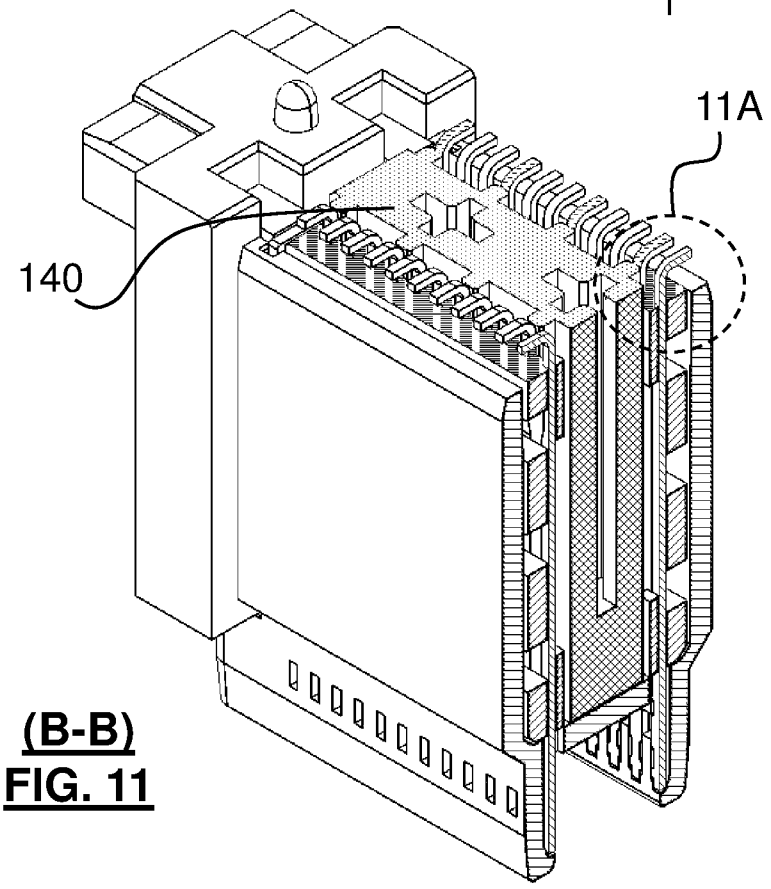

(B-B)
FIG. 11

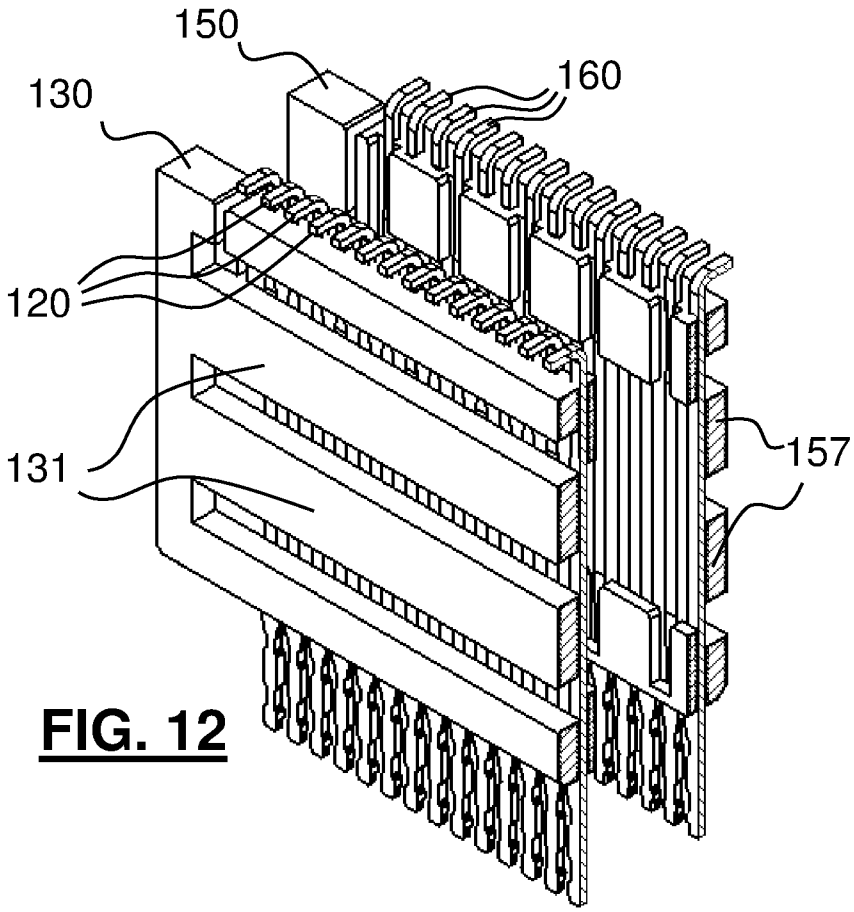

FIG. 12

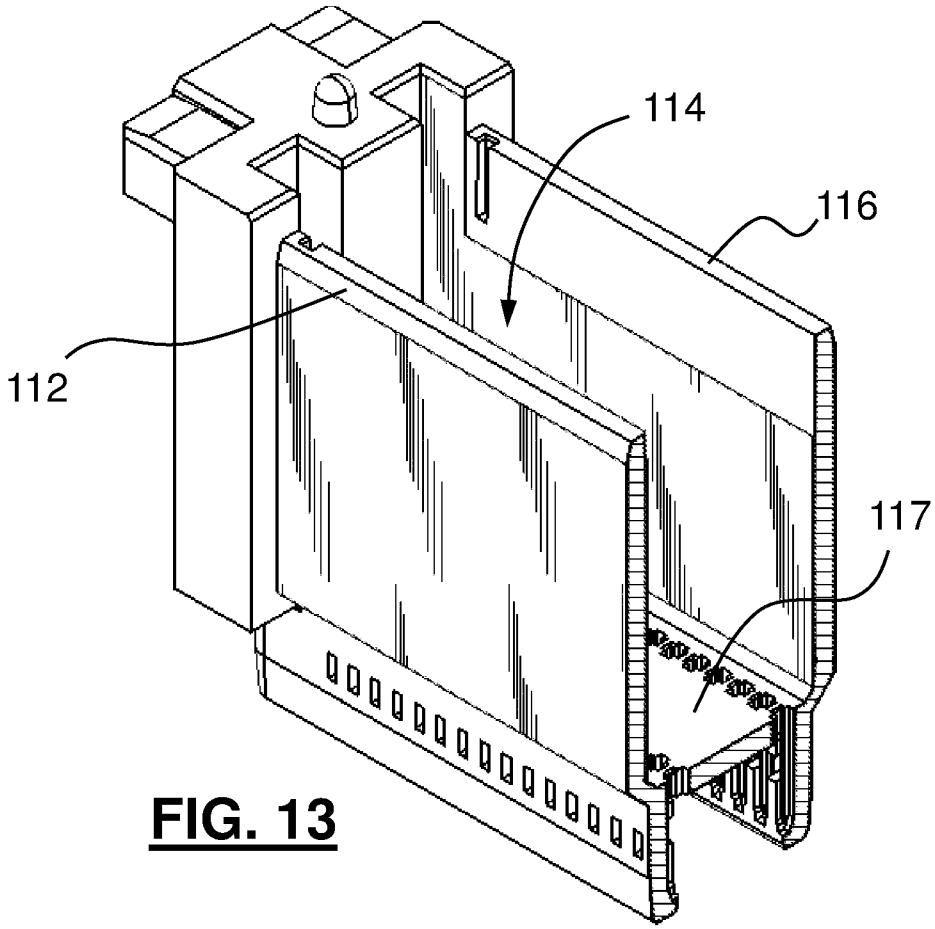

FIG. 13

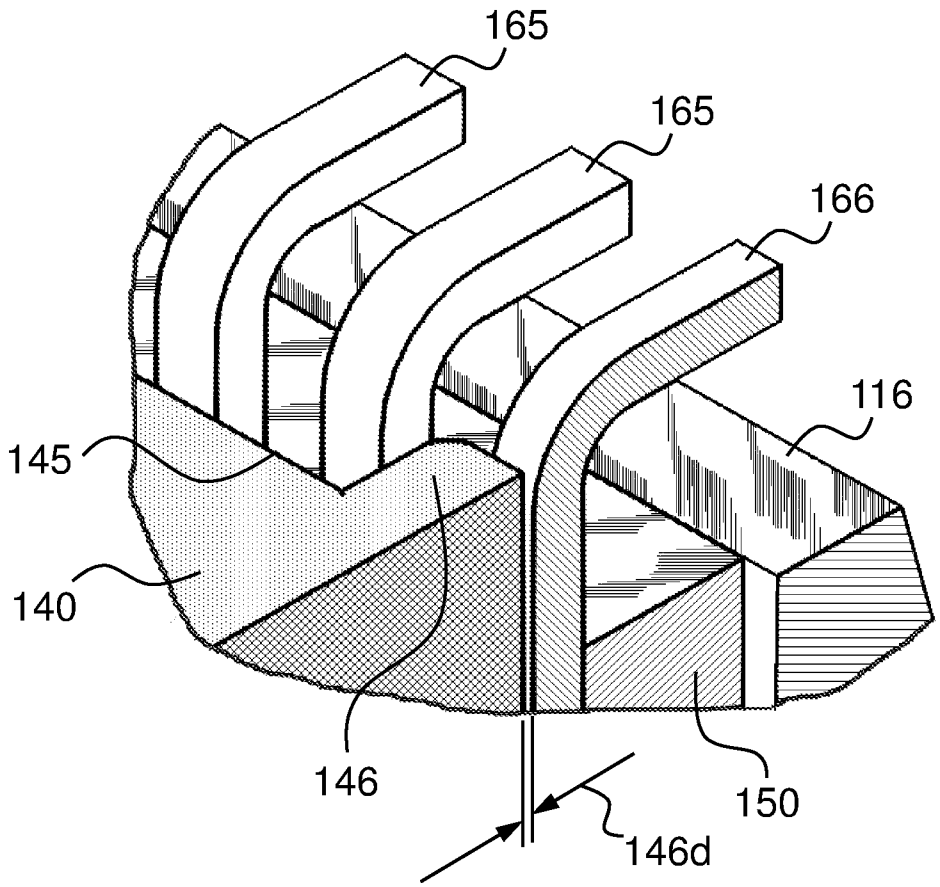

FIG. 14

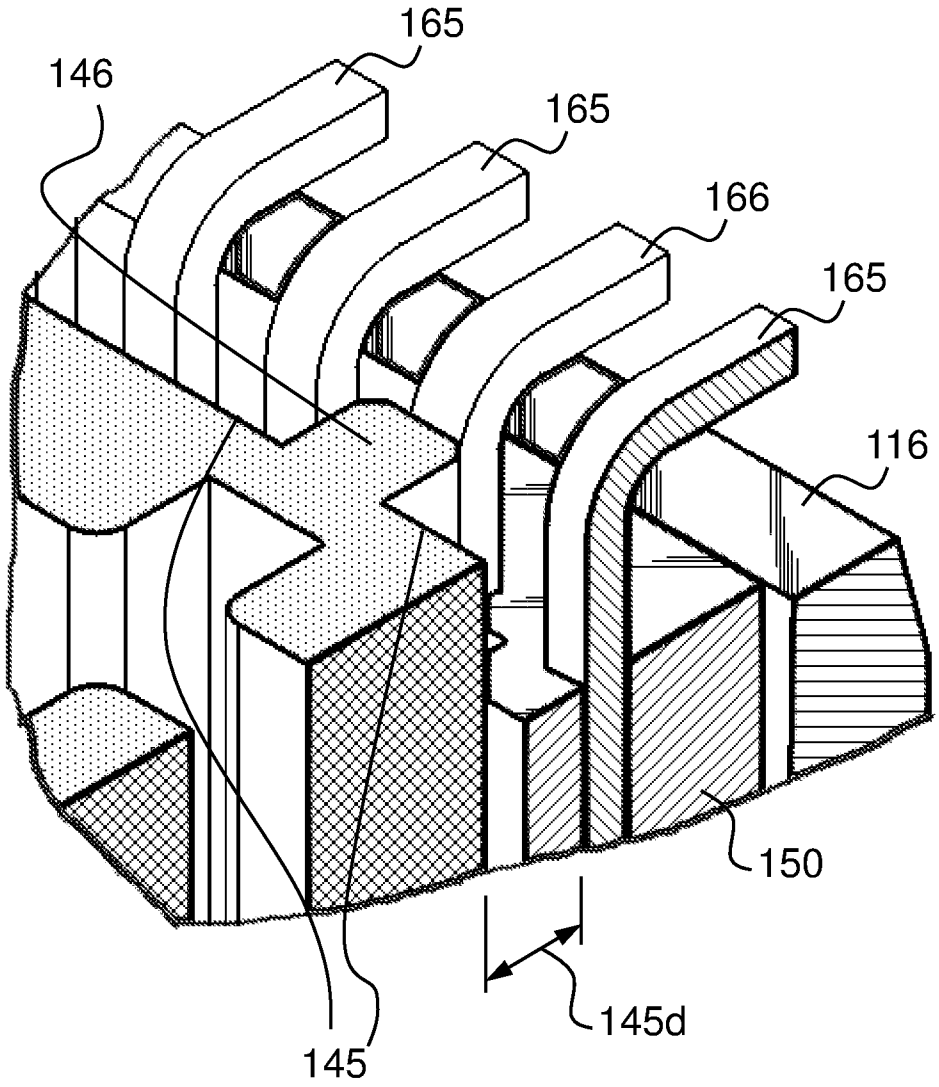

FIG. 15

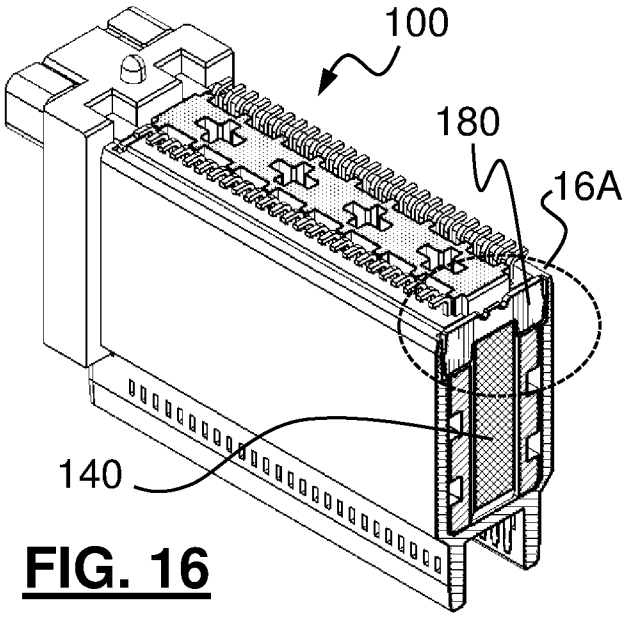

FIG. 16

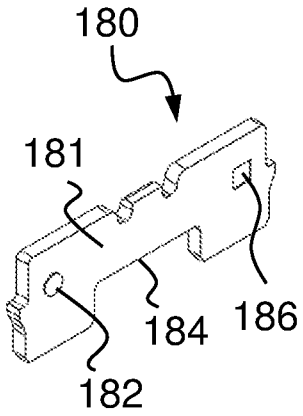

FIG. 17A

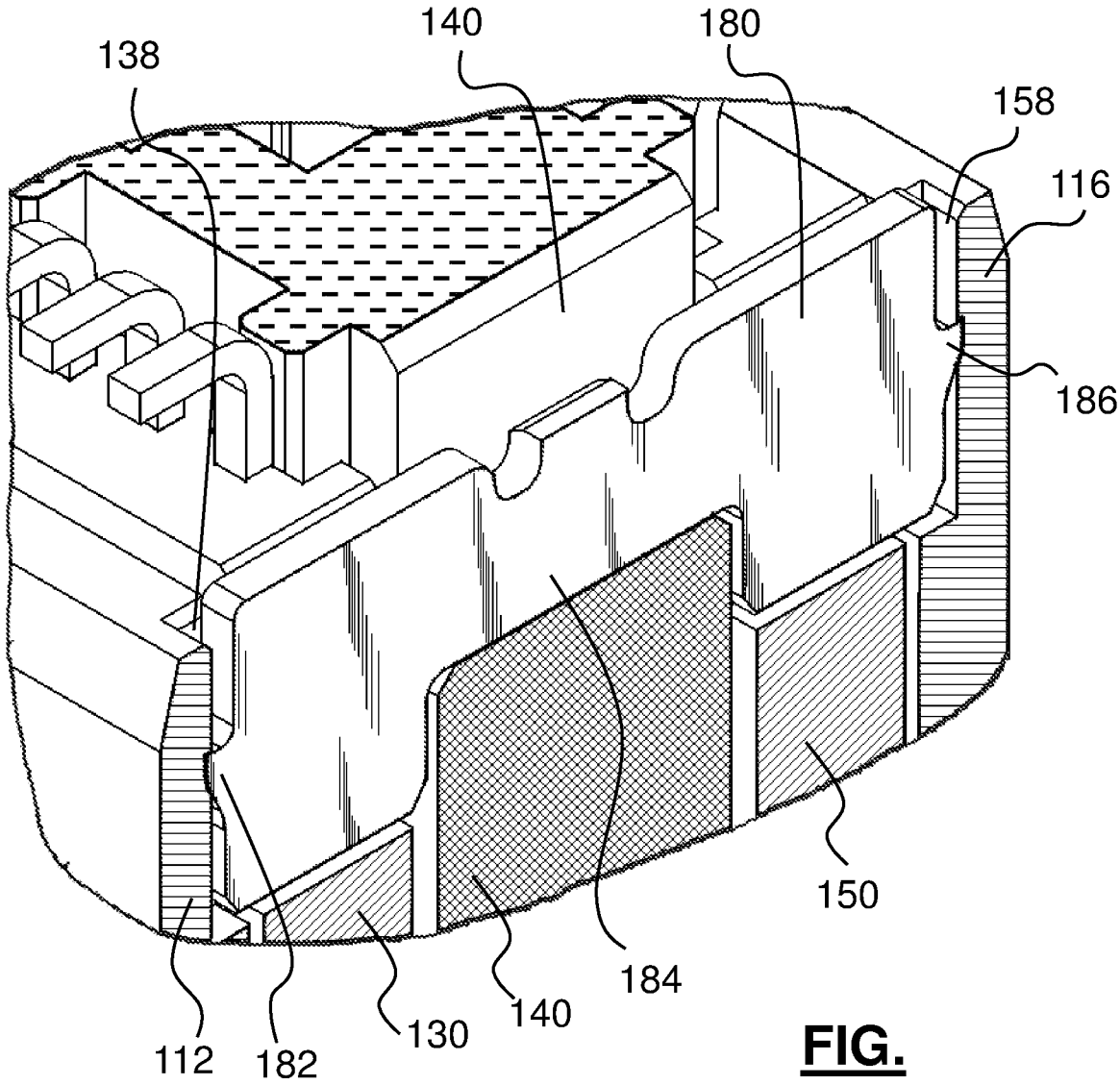

FIG. 17B

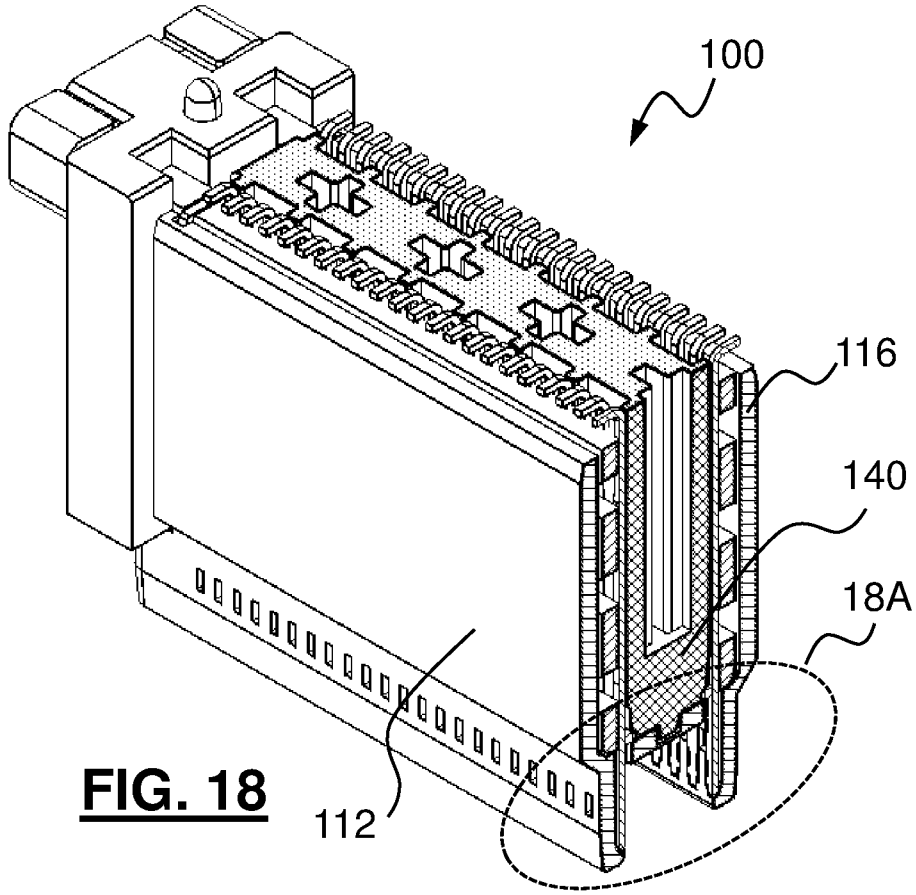

FIG. 18

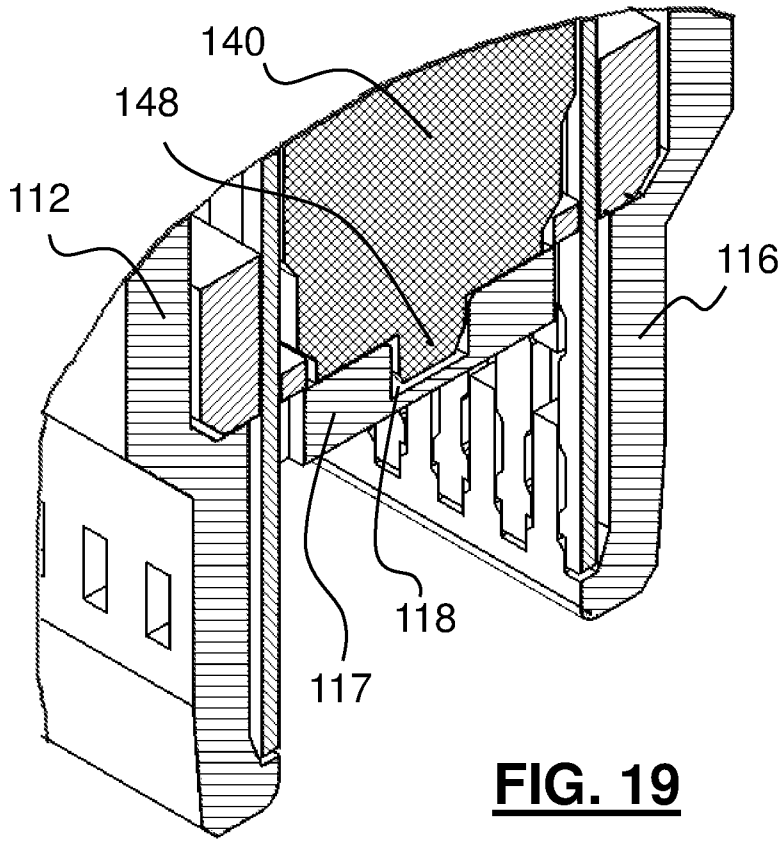

FIG. 19

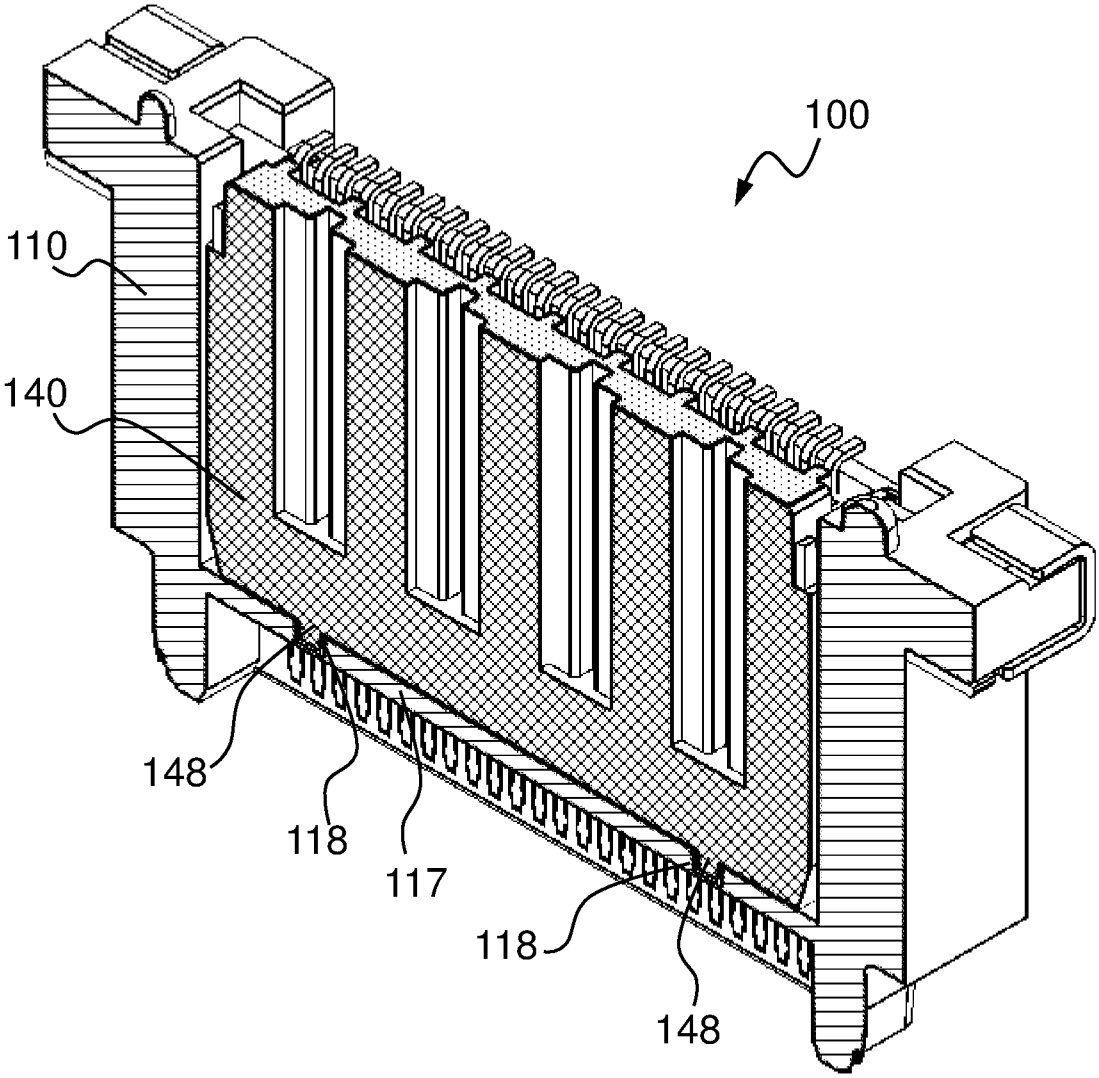

FIG. 20

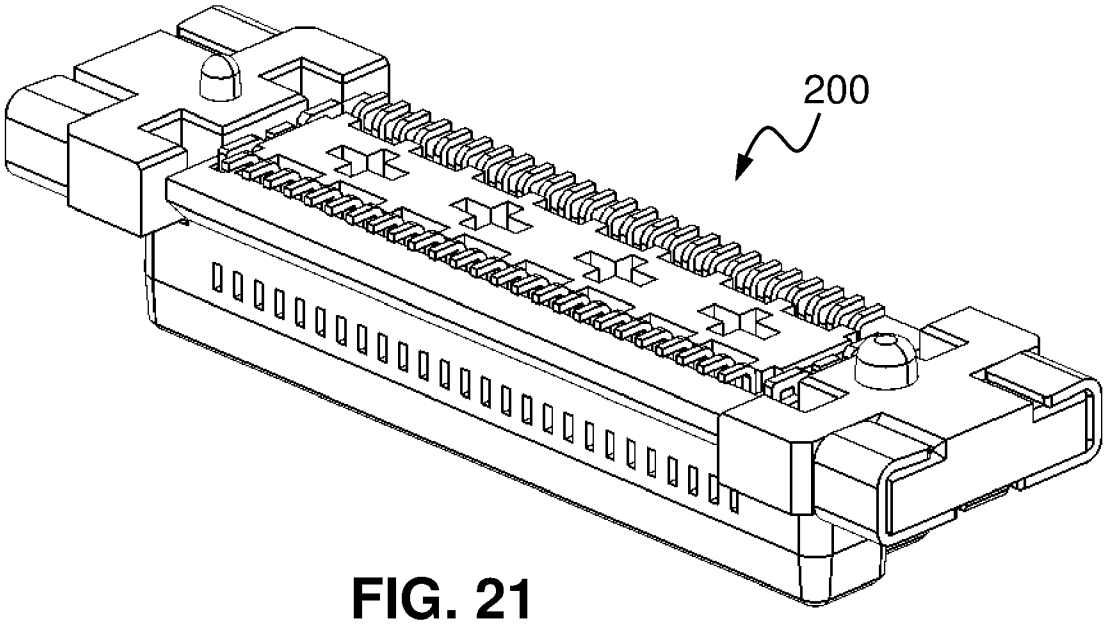

FIG. 21

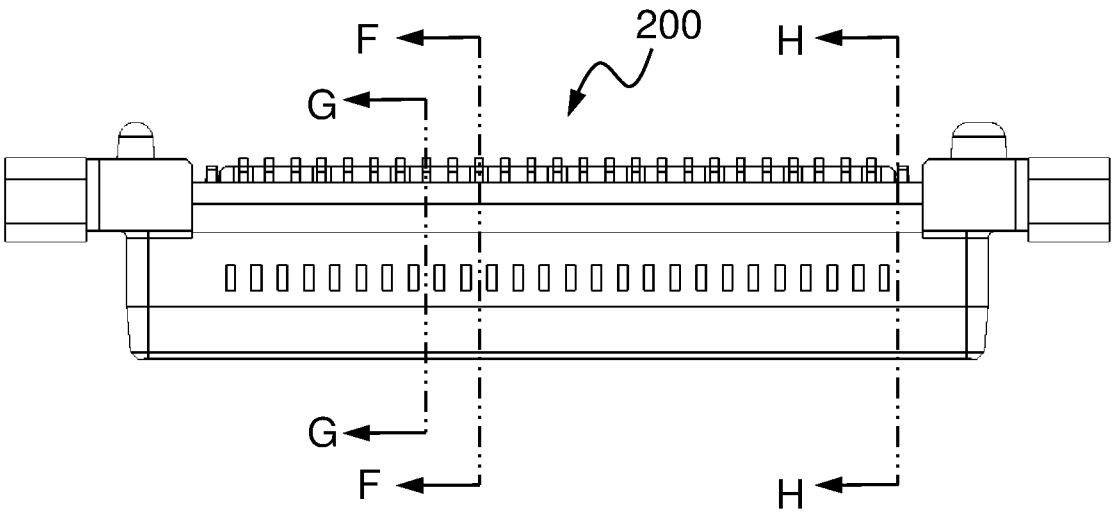

FIG. 22

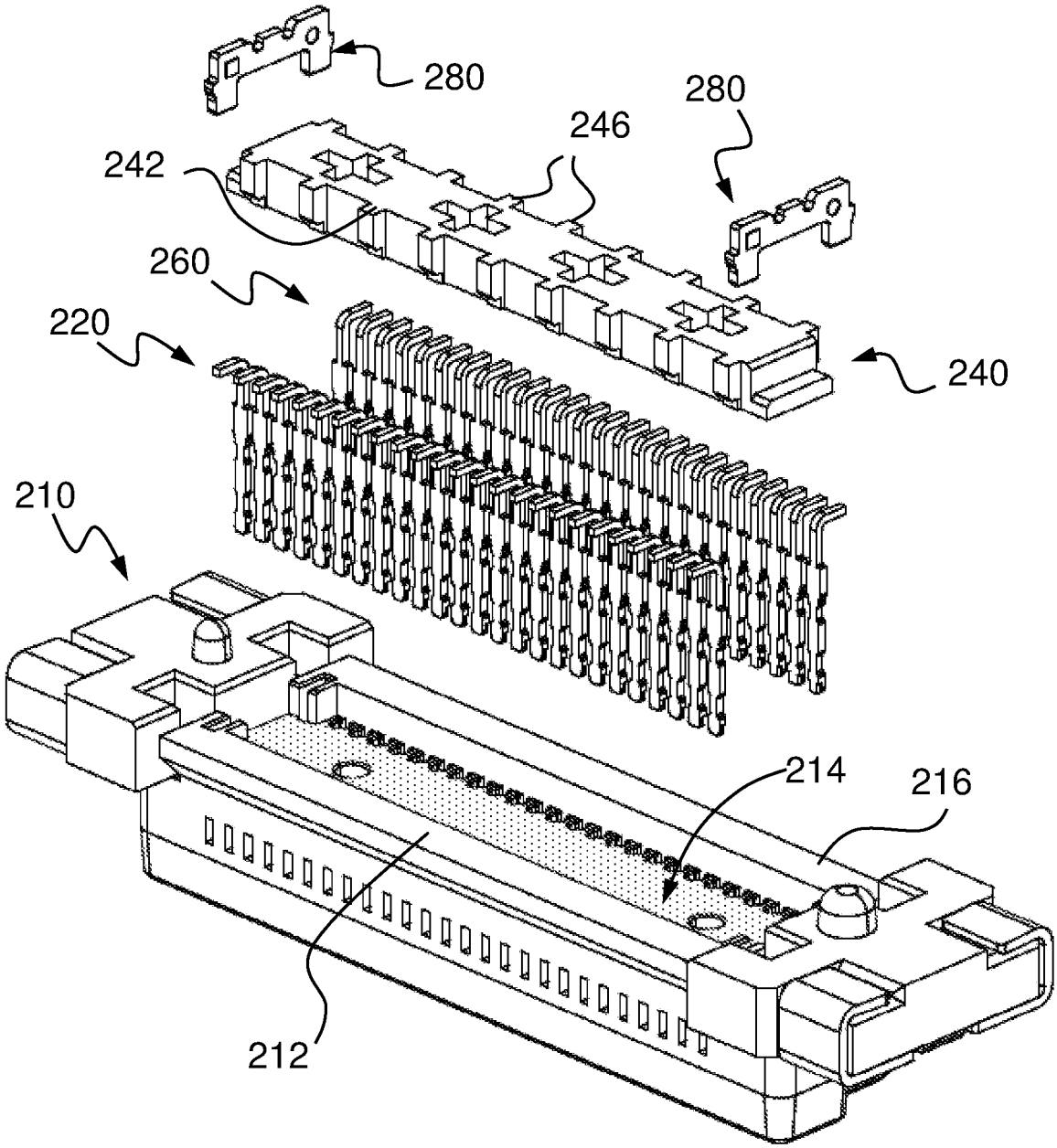

FIG. 23

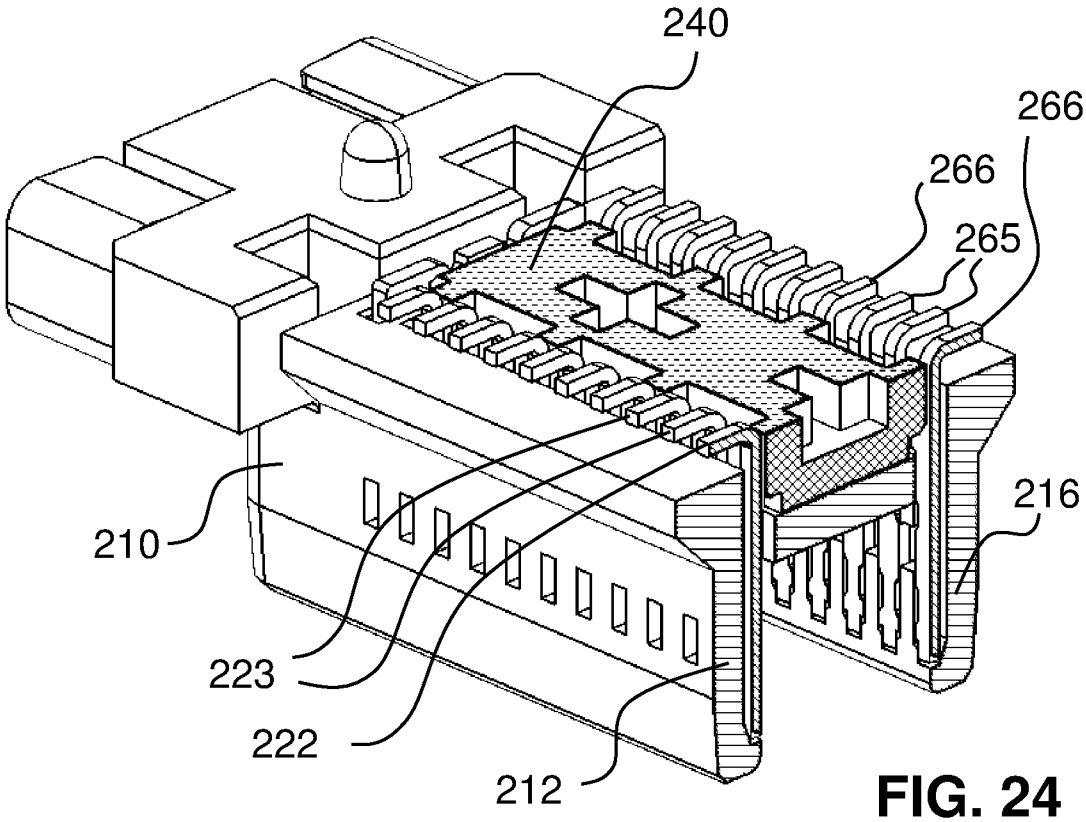

FIG. 24

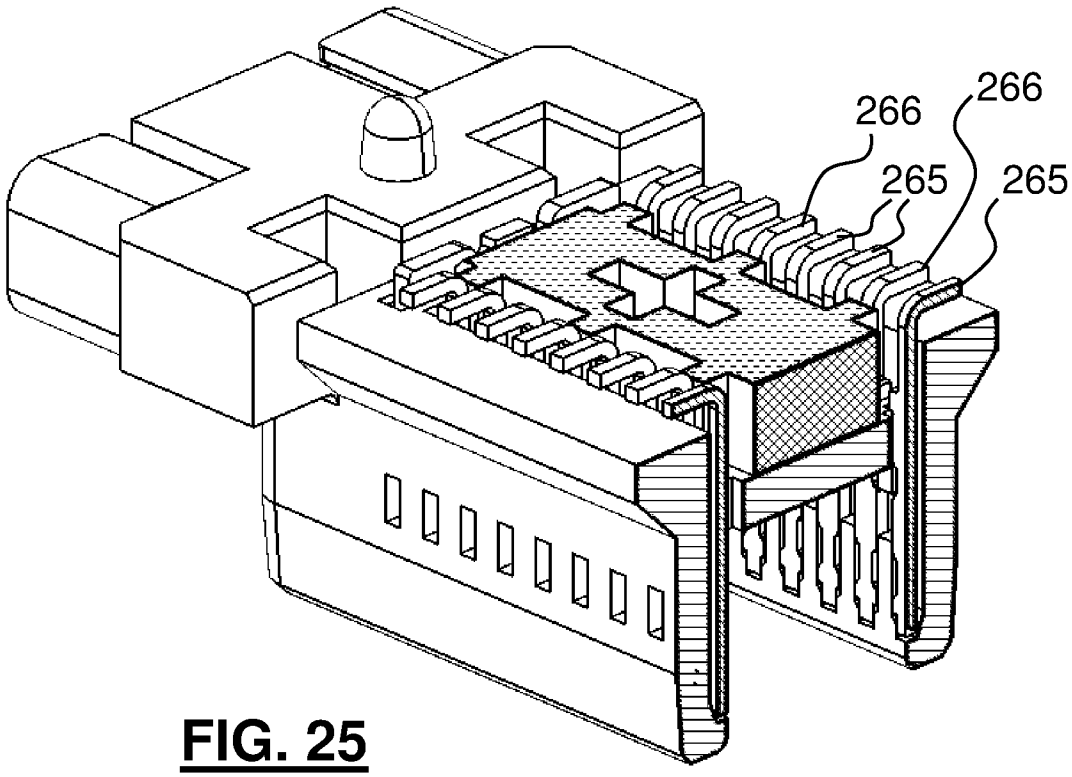

FIG. 25

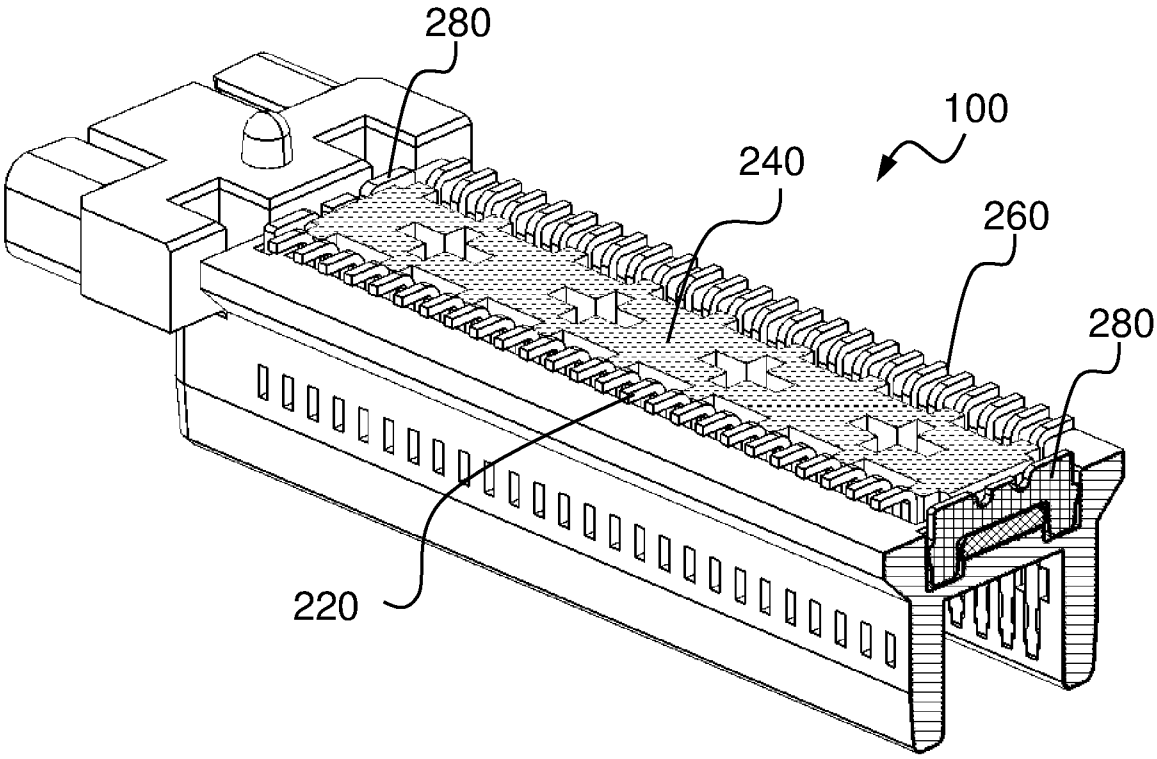

FIG. 26

INTERNATIONAL SEARCH REPORT

International application No.
PCT/SG2016/050317

A. CLASSIFICATION OF SUBJECT MATTER

Int.Cl. H01R12/71(2011.01)i

According to International Patent Classification (IPC) or to both national classification and IPC

B. FIELDS SEARCHED

Minimum documentation searched (classification system followed by classification symbols)

Int.Cl. H01R12/70-12/91

Documentation searched other than minimum documentation to the extent that such documents are included in the fields searched

Published examined utility model applications of Japan 1922-1996
Published unexamined utility model applications of Japan 1971-2016
Registered utility model specifications of Japan 1996-2016
Published registered utility model applications of Japan 1994-2016

Electronic data base consulted during the international search (name of data base and, where practicable, search terms used)

C. DOCUMENTS CONSIDERED TO BE RELEVANT

Category*	Citation of document, with indication, where appropriate, of the relevant passages	Relevant to claim No.
X A	US 2002/0061671 A1 (YAZAKI CORPORATION.) 2002.05.23, paragraphs[0033]to[0038],paragraphs[0049]to[0057],figures 1-3,9 & JP 2002-151190 A	1 2-16
A	US 2010/0203772 A1 (HON HAI PRECISION INDUSTRY CO., LTD.) 2010.08.12, figures 1-5 & CN 201374434 Y	1-16
A	US 2010/0124851 A1 (HON HAI PRECISION INDUSTRY CO., LTD.) 2010.05.20, figures 1-3 & JP 3156761 U & CN 201323275 Y	1-16

☐ Further documents are listed in the continuation of Box C.

☐ See patent family annex.

* Special categories of cited documents:

"A" document defining the general state of the art which is not considered to be of particular relevance

"E" earlier application or patent but published on or after the international filing date

"L" document which may throw doubts on priority claim(s) or which is cited to establish the publication date of another citation or other special reason (as specified)

"O" document referring to an oral disclosure, use, exhibition or other means

"P" document published prior to the international filing date but later than the priority date claimed

"T" later document published after the international filing date or priority date and not in conflict with the application but cited to understand the principle or theory underlying the invention

"X" document of particular relevance; the claimed invention cannot be considered novel or cannot be considered to involve an inventive step when the document is taken alone

"Y" document of particular relevance; the claimed invention cannot be considered to involve an inventive step when the document is combined with one or more other such documents, such combination being obvious to a person skilled in the art

"&" document member of the same patent family

Date of the actual completion of the international search	Date of mailing of the international search report
06.10.2016	18.10.2016

Name and mailing address of the ISA/JP	Authorized officer
Japan Patent Office 3-4-3, Kasumigaseki, Chiyoda-ku, Tokyo 100-8915, Japan	TAKESHITA , Shinji 3T 3222 Telephone No. +81-3-3581-1101 Ext. 3368