Aug. 7, 1956 G. S. KNOX 2,757,689

ACCUMULATOR OR PULSATION DAMPENER

Filed Dec. 22, 1952

Fig. 1.

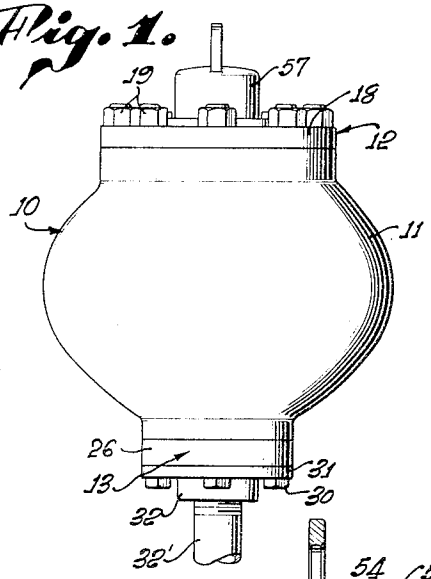

Fig. 2.

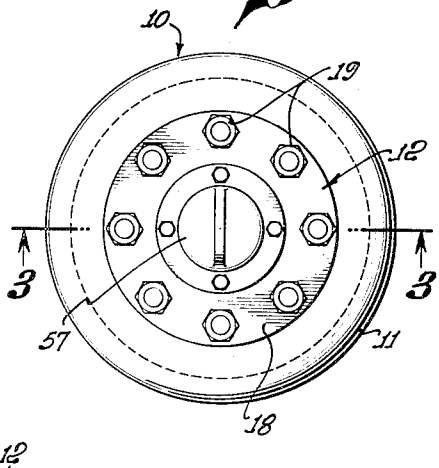

Fig. 3.

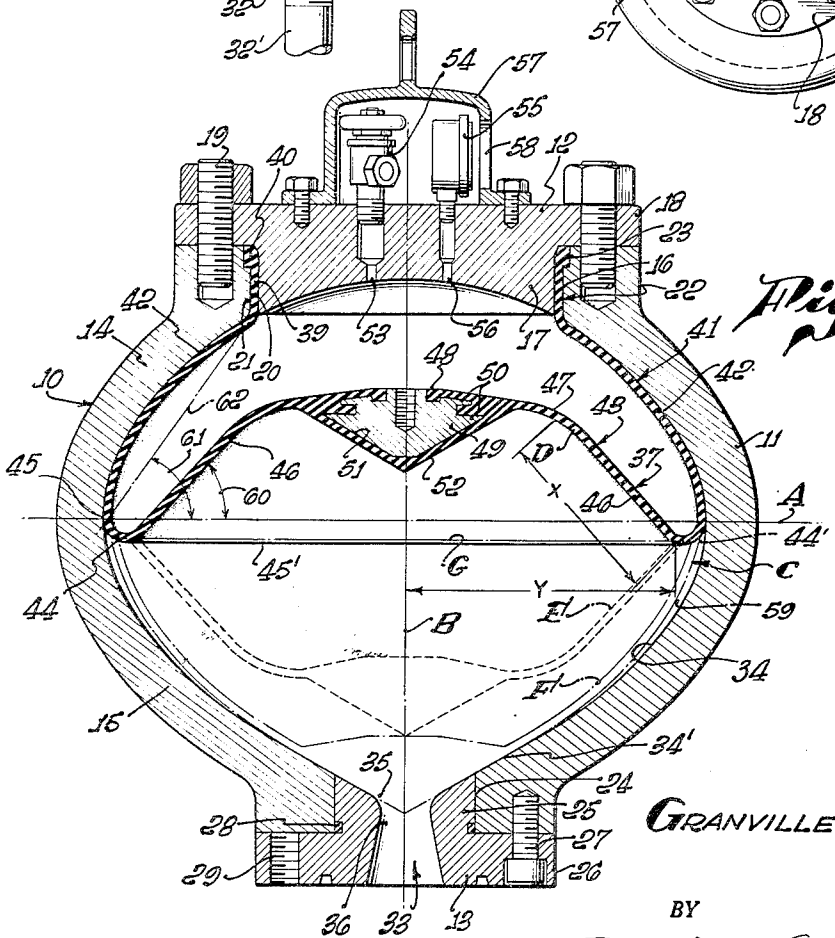

GRANVILLE S. KNOX
INVENTOR.

BY

Dorsey & Scantlebury

ATTORNEYS.

United States Patent Office 2,757,689 Patented Aug. 7, 1956

2,757,689

ACCUMULATOR OR PULSATION DAMPENER

Granville S. Knox, Glendale, Calif., assignor to Hydril Company, Los Angeles, Calif., a corporation of Ohio

Application December 22, 1952, Serial No. 327,280

3 Claims. (Cl. 138—30)

This invention has to do generally with accumulators or pulsation dampeners, but it will suffice to discuss the nature and operation of the device solely as a pulsation dampener, without thereby implying that its adaptation is limited to such service.

The invention is particularly well adapted to handle the severe service requirements of and to withstand the severe conditions encountered in pumping mud laden fluid during well drilling operations, and therefore I have illustrated and will describe an embodiment especially suited to that use, though this is not to be construed as limitative.

In the above environment, the dampeners are installed in output lines of reciprocating-plunger, mud or slush pumps, to smooth out pressure peaks. The pre-charged surge chamber effectively eliminates surging and water hammer in the rotary hose and mud lines, resulting in longer service life and less maintenance trouble and expense as regards the pumps, the rotary hose, the swivel packing, etc.—all as is well understood in the art.

It is among the objects of the invention to provide a simple, durable dampener which has maximum surge-chamber capacity in spite of its relatively small over-all size, there being no "dead space" within the device. A special object of the invention is to so shape the chamber and diaphragm that the diaphragm not only performs in a particularly efficient manner, but is adapted to have exceedingly long life in spite of constant flexing. The arrangement is such that harmful folding, wrinkling and stretching of the diaphragm are reduced to a minimum in spite of the relatively long "stroke" of the diaphragm. Moreover, when the time comes for diaphragm inspection or replacement, it is an easy operation to withdraw, inspect and replace the diaphragm, or to substitute a new diaphragm.

It is a still further object of the invention to render the device self-cleaning; that is, when the pumps are shut down, the gas pressure above the flexible diaphragm may be utilized to force that member downward to effect displacement of mud laden fluid through an unobstructed outlet in the lower part of the body. This prevents an undue accumulation of sediment in the body chamber and insures maximum operating efficiency at all times.

On the other hand, there is provision for trapping a limited amount of fluid between the shell wall and the flexing portion of the diaphragm to prevent abrasive wear on the diaphragm. Certain parts of the device are so shaped that the sediment entering the chamber is evenly distributed to the extent that there are no harmful local accumulations during operation.

I have also provided a novel and particularly efficient valve stopper which closes the surge passageway when the diaphragm is fully distended, preventing extrusion of the diaphragm into that passageway.

Other objects and features of the invention will become apparent from the following detailed description, reference being had to the accompanying drawings, in which,

Fig. 1 is a side elevation of the dampener;

Fig. 2 is a top plan view of Fig. 1; and

Fig. 3 is an enlarged section on line 3—3 of Fig. 2.

The body shell **10** is made up of a main section **11**, cap section **12**, and bottom section **13**. The portions of the shell above and below the central axial plane A will be considered, respectively, as upper and lower shell-walls **14** and **15**. The upper end of section **11** has a relatively large, central mouth **16** which receives the cylindrical plug portion **17** of section **12**, while the flange portion **18** of section **12** is bolted to section **11** at **19**. The peripheral face **20** of plug portion **17** is annularly spaced from the defining wall **21** of mouth **16** to provide a downwardly opening, annular groove **22** which, as well as counter-bore **23**, serve to receive portions of the diaphragm, as will later appear.

The lower end of section **11** has a relatively small, central mouth **24** adapted to receive the cylindrical plug portion **25** of bottom section **13**, the flange portion **26** of section **13** being bolted to section **11** at **27**. The joint between sections **11** and **13** is packed off by compressed sealing ring **28**. Flange **26** has threaded holes **29** to receive bolts **30** (Fig. 1) whereby the flange **31** of fitting **32** may be fastened to the dampener, this fitting being connected by pipe **32** to the output line (not shown) of a pump or the like. The pipe communicates with the central flow passage **33**, of which more will be said later, extending through bottom section **13**.

Walls **14**, **15** define a chamber C which has the general shape-characteristics of an oblate spheroid with its polar or shorter axis B extending vertically, it being understood that the words "vertical" and "horizontal" are used in this description and in the claims merely for the purpose of relative orientation of parts and not in their limited sense. Axial plane A may thus be considered as the equatorial axial plane of chamber C, since the line representing that plane also represents the longer axis of the generating ellipse.

The lower portion of the defining wall of chamber C is preferably slightly modified so that the curved defining wall **34** merges smoothly into a conical surface or zone **34'** immediately surrounding the orifice **35** of passage **33**, the conical surface smoothly and with streamlines merging into the defining wall of the passage, which latter preferably is in the nature of a venturi, with the streamlined venturi restriction **36** at a point near said orifice.

The diaphragm **37** is in the nature of a bladder made of natural or synthetic rubber and is pre-formed, as by molding, so, when it is in equilibrium, it has the shape shown in solid lines (position D) in Fig. 3. The neck **39** and neck flange **40** of the bladder are tightly clamped in groove **22** and counterbore **23**, respectively, thus not only positively fixing the upper end of the bladder to body shell **10**, but also packing off the joint between sections **11** and **12**.

When in position D (that is, when the diaphragm is in equilibrium and thus in the shape it inherently assumes when detached from the shell) its upper portion **41** has an arcuate extent **42** which is complementary to and engages the upper shell wall **14**.

Arcuate portion **42** terminates at **45**, which lies approximately in plane A, and is connected to base portion **43** by a bend **44**, annular as viewed in plan, whose lower edge **45'** lies in plane G, and thus below plane A. Each portion of bend **44** is arcuate in vertical cross section, with the centers of the cross-sectional curvature lying approximately in plane A. Thus, when the diaphragm is in equilibrium, base portion **43** lies, in major extent at least, within the space bounded by said upper portion **42**.

Starting from bend **44**, the base portion **43** has a conical extent **46** which merges, by way of curved extent

47, into an uppermost, substantially horizontal and central extent 48. Embedded in this horizontal extent is a downwardly pointing conical valve stopper 49 which is rigid in nature and is keyed to the rubber at 50. The axes of stopper 49 and passage 33 are coincident with polar axis B. The rubber making up the diaphragm is continued integrally across the lower conical surface 51 of stopper 49 to provide a rubber facing 52 to seat on conical face 34 around orifice 35 when the bladder is in fully distended position, as represented by the dotted line position F, thus to close off passage 33 and prevent extrusion of the bladder into said passage.

Opening through cap section 12 and into the bladder, is a fluid flow passage 53, into which a valved fitting 54 is set. Gas such as compressed air or compressed nitrogen is introduced through fitting 54 to provide the pulsation absorbing or dampening agent when surges occur in the fluid admitted through passage 33 to chamber C below the bladder. A gage 55 is in communication through passage 56 with the bladder interior, whereby the gas pressure within the bladder may be ascertained. Preferably, a guard 57 is bolted to cap section 12 to protect fitting 54 and gage 55, the guard having a gage-sighting opening 58.

The bladder is preferably precharged so it will be in position F, it having passed through position E in reaching this position F. When in position E, the rubber of the diaphragm is unstretched, except slightly at bend 44. In going from position E to position F, the body portion of the bladder is stretched but, since the bend 44 is relatively rigid, there will be a flattened, or return-bend effect 44' which will tend to stand the adjacent extent of the base portion away from wall 15 to provide a space 59. Subsequently, an upward surge of fluid through passage 33 overcomes the previously predominant pressure in the bladder and thus unseats valve stopper 49 to admit fluid to chamber C below the bladder. When the gas pressure again becomes predominant and re-seats the stopper, fluid will be trapped in space 59 between return bend 44' and the seated stopper, and this trapped fluid will hold the affected part of the bladder from contacting the shell wall, thus preventing abrasive wear on the bladder. The rubber facing 52 is adapted to make a tight seal whereby the trapping of the fluid is assured.

With the chamber C and bladder 38 shaped as shown and described, the diaphragm moves between its limits with a minimum of harmful folding, wrinkling and stretching. Contributing greatly to this effect is the fact that the slant height X of the conical extent 46 of bladder base-portion 43 is made to be appreciably less than the radius Y of the bend annulus 44, Y also representing the radius of the base of the conical extent 46, when the bladder is in equilibrium (position D). It is also of decided advantage to pre-form the slant angle 60 of the conical extent so, when the diaphragm is in equilibrium, said angle is less than the angle 61 between the plane A and a chord

62 drawn from that plane to the upper end of arcuate extent 42. It has been found that an angle 60 of 45° is best suited to most purposes.

The venturi effect and the streamlining of passage 33 are extremely helpful in so directing the incoming stream of fluid as to distribute sediment evenly over the shell walls, thus preventing localization or pocketing of such sediment in such a manner that the diaphragm is locally displaced—for the localizing effect would otherwise tend to cause undue wear of the bladder or to throw the stopper 49 out of line with passage 33, or both.

Various changes in design, structure and arrangement may be made without departing from the spirit and scope of the appended claims.

I claim:

1. In a device of the character described, a body shell having upper and lower walls defining an interior chamber having the general shape-characteristics of an oblate spheroid arranged with its polar axis extending vertically, a rubber bladder within said chamber, the upper end of the bladder being detachably secured to said shell, said bladder being pre-formed so, when in equilibrium within the shell, it includes an upper portion substantially complementary to the chamber defining wall above the equatorial axis of the chamber, and a base portion lying, in major extent at least, within the space bounded by said upper portion, said base portion including a base-down conical extent and an uppermost horizontal and central extent, the slant height of the conical extent being less than the radius of the base of the conical extent, there being a pair of fluid flow passages opening through the shell, one to the interior of the bladder and the other to the chamber at a point below the bladder.

2. A device as in claim 1; wherein said other port and said horizontal extent are coaxial and wherein the lower chamber-defining wall merges smoothly from a zone of curved cross section to a conical zone immediately surrounding said other passage, and a rigid, downwardly pointing conical stopper centrally carried by said horizontal extent, said stopper seating on the conical zone of said lower wall to close said other passage when the diaphragm is fully extended by predominant fluid pressure existing within the bladder.

3. A device as in claim 1; wherein the base of the conical extent lies in a plane below the equatorial plane of the chamber.

References Cited in the file of this patent

UNITED STATES PATENTS

2,216,374	Martin	Oct. 1, 1940
2,345,475	Herman et al.	Mar. 28, 1944
2,378,517	Trautman	June 19, 1945
2,401,792	Overbeke	June 11, 1946
2,563,257	Loukonen	Aug. 7, 1951
2,604,118	Greer	July 22, 1952