(No Model.)

2 Sheets--Sheet 1.

W. E. McLEOD.

Barrel Hoop Machine.

No. 231,882.

Patented Aug. 31, 1880.

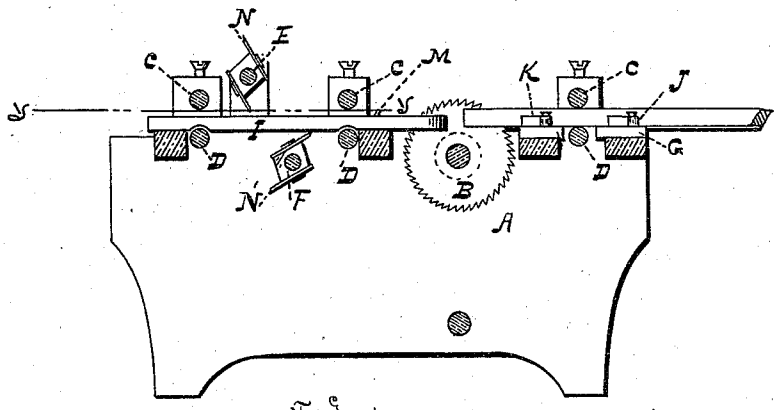

Fig. 1.

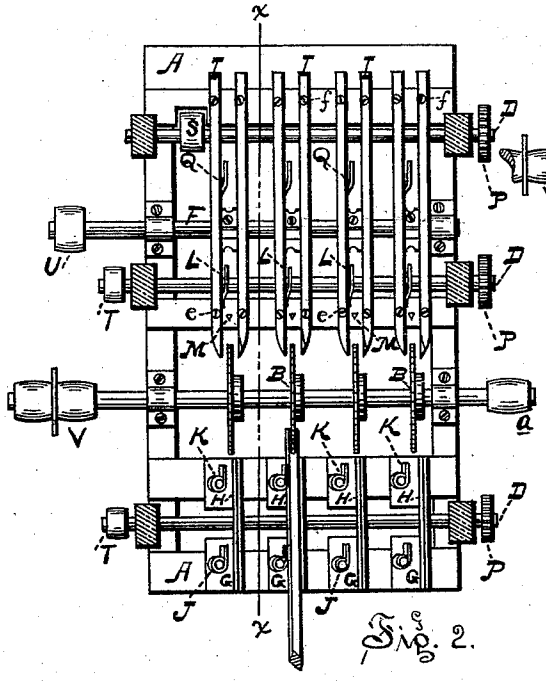

Fig. 2.

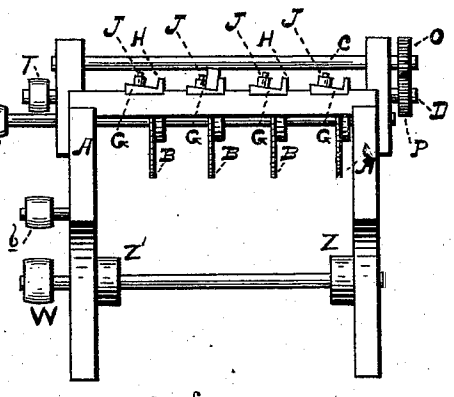

Fig. 3.

Attest:

Jno. A. Wein

Geo. B. Reinick

Inventor:

William E. McLeod

by Geo. H. Lothrop

his atty.

N. PETERS, PHOTO-LITHOGRAPHER, WASHINGTON, D. C.

(No Model.) 2 Sheets—Sheet 2.

W. E. McLEOD.

Barrel Hoop Machine.

No. 231,882. Patented Aug. 31, 1880.

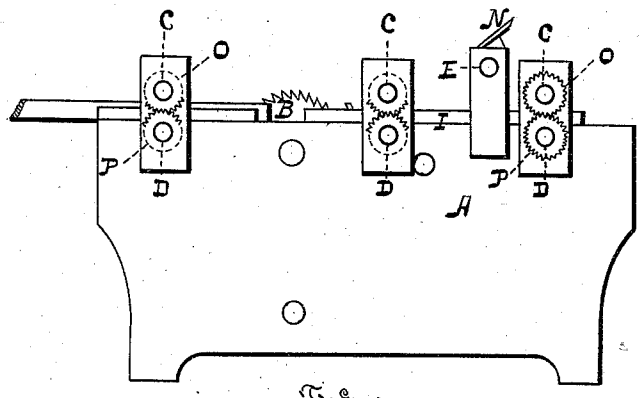

Fig. 4.

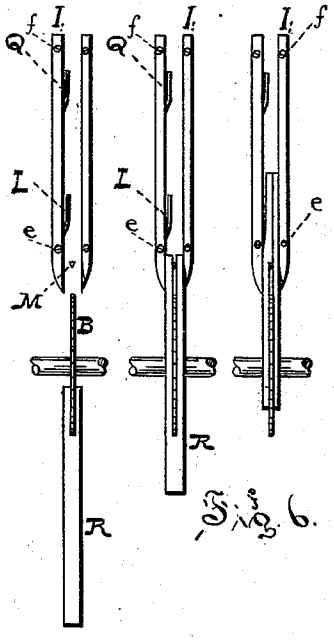

Fig. 6.

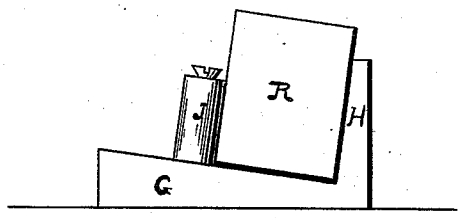

Fig. 5.

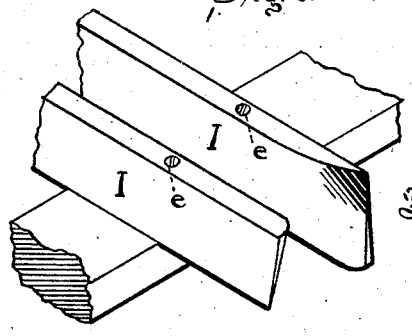

Fig. 7.

Attest:
Jno A Weir
Geo. B. Rennick

Inventor:
William E. McLeod
by Geo. H. Lothrop
his Atty.

N. PETERS, PHOTO-LITHOGRAPHER, WASHINGTON, D. C.

UNITED STATES PATENT OFFICE.

WILLIAM E. McLEOD, OF ECORSE, MICHIGAN.

BARREL-HOOP MACHINE.

SPECIFICATION forming part of Letters Patent No. 231,882, dated August 31, 1880.

Application filed April 5, 1880. (No model.)

To all whom it may concern:

Be it known that I, WILLIAM E. McLEOD, of Ecorse, in the county of Wayne and State of Michigan, have invented a new and useful Improvement in Machines for Sawing Barrel-Hoops, of which the following is a specification.

My invention relates to that class of hoop-sawing machines in which a rectangular bar of wood is sawed into two beveled hoops and the edges of the bar or hoops rounded in one machine; and it consists in the combination, in a hoop-sawing machine, of one or more saws and one or more guides so relatively arranged that a bar or bars fed endwise on the guides to the saw or saws will be divided diagonally, one or more guideways to receive the two parts of each bar and hold them together as they leave the saw, and suitable cutters arranged upon opposite sides of the said guideways to act upon the opposite sides of the two parts of the divided bar and round their edges, so that each bar in its progress through the machine is converted into two round-edge beveled hoops, as will be hereinafter particularly described.

In the drawings, Figure 1 is a longitudinal section on line *x x* in Fig. 2. Fig. 2 is a horizontal section on line *y y* in Fig. 1. Fig. 3 is an end elevation of my invention. Fig. 4 is a side elevation of my invention. Fig. 5 is an enlarged end elevation of detail. Fig. 6 is a plan of detail in three views, and Fig. 7 is an isometric view of guides I I.

The parts are each designated by the same letter in all the drawings.

A is the frame of the machine. C D are three pairs of feed-rollers, the upper and lower rollers of each pair being connected with each other by cog-wheels P.

G G are inclined guides or ways, having a shoulder, H, at right angles to the bed of the guide or way.

J J K K are springs fastened to the beds of the guides or ways G G, and serve to hold the bar R firmly against shoulder H on guides G.

B B are circular saws set on an arbor running horizontally across the top of frame A, and hung in suitable bearings on frame A.

I I are guides arranged in pairs longitudinally on the frame A, each pair placed so that one of the saws B revolves partly in or just before the opening between said guides.

The inner surfaces of each pair of guides, at the end nearest the saw, are beveled as far back as the point *e*, so that they are nearly parallel with the inner surface of shoulder H on guides G. Between the points *e* and *f* the inner surfaces of the guides I I are vertical.

L L and Q Q are springs fastened to the inner surface of one of each pair of guides I I, and serve to hold the two parts of the bar R firmly together while the upper and lower edges thereof are being rounded.

M M are separators fastened to a cross-piece on frame A, and serve to separate the two parts of bar R and prevent the same from binding the saws B.

E and F are rotating shafts, each of which carries a series of cutter-heads and concave cutters, N N′. The shaft E is hung in bearings raised above the bed of the frame A, so that as the bar R passes under the shaft E the upper edge or side of bar R will be rounded by the concave cutters N. The shaft F is hung below the bed of the frame A, so that the concave cutters N′ will round the lower edge or side of bar R in the same manner that the concave cutters N round the upper edge or side of said bar.

All the cutting mechanism is driven by pulley *a* on the saw-arbor, and two belts run from the double pulley V on the saw-arbor to pulleys on the ends of shafts E and F.

The feed mechanism is all driven by pulley Z, Fig. 3. A belt runs from pulley Z′, Fig. 3, to pulley S, Fig. 2, and a belt runs from pulley W, Fig. 3, over both pulleys T T, and under idler-pulley *b*, Fig. 3.

The operation of the machine is as follows: The timber to be made into hoops is first sawed into rectangular bars R, of sufficient width and height to make two beveled hoops. The bar R is then placed on the guide G, between the springs J K and shoulder H, and is fed to the saw B by the first pair of feed-rollers C D, which also hold the bar R firmly down upon guide G while being sawed. As the bed of the guide G is not at right angles with the saw B, the bar R is so presented to the saw that it is sawed diagonally from top to bottom. As the bar R is forced along by the feed-rollers the

two parts thereof are held open by the separator M. The two parts of the bar R enter the guides I in the same position that they left the saw; but by the beveled sides of the guides I the two parts of the bar R are turned so that the sides of said bar are vertical, and the two parts are held firmly compressed together by the springs L and Q while being operated upon by by the cutters N N'. After passing the springs L the two portions of bar R are fed forward to the cutters N' N, and held firmly in position by the second pair of feed-rollers C D, and the third pair of feed-rollers C D aid in holding the bar R firm under the operation of the cutters N' N, and finally eject the finished hoops from the machine. As the two parts of bar R pass over shaft F and concave cutters N' the lower edge or side of bar R is rounded by the revolving cutters N', and as the bar R passes under the revolving shaft E its upper edge or side is rounded by the revolving concave cutters N. By thus sawing the bar diagonally into two parts and then rounding the upper and lower sides, I avoid the burr which is left on the edges of the hoops by the saw in all hoop-sawing machines in which the edges are first rounded and the burr then sawed diagonally, which burr injures the appearance of and detracts from the value of the finished hoops.

I do not broadly claim the inclined guides G, the saws B, or the upper or lower revolving concave cutters, N N'; but

What I do claim as my invention, and desire to secure by Letters Patent, is—

1. The combination, in a hoop-sawing machine, of one or more saws and one or more guides so relatively arranged that a bar or bars fed endwise in the guide or guides to the saw or saws will be divided diagonally, one or more guideways to receive the two parts of each bar and hold them together as they leave the saw, and suitable cutters arranged upon opposite sides of the said guideways to act upon the opposite sides of the two parts of the divided bar and round their edges, substantially as and for the purpose set forth.

2. In a hoop-sawing machine, the combination of the inclined guides G, having a shoulder, H, thereon, springs J and K, circular saws B, separators M, guides I, with springs L and Q, rotating shafts E and F, carrying concave cutters N N', and three pairs of feed-rollers, C D, all constructed, arranged, and operating substantially as herein shown and described.

3. In a hoop-sawing machine, the combination of the inclined guides G, having shoulder H, springs J, circular saws B, guides I, with springs L, rotating shafts E and F, carrying concave cutters N N', and one or more pairs of feed-rollers, C D, all constructed, arranged, and operating substantially as herein shown and described.

4. In a hoop sawing machine, the combination of one or more pairs of feed-rollers, inclined guides or ways to so present the bar to be made into hoops to the saw that the bar will be sawed diagonally, guides or ways to hold the two parts of said diagonally-sawed bar in a horizontal position and firmly compressed together, and two sets of concave revolving cutters for rounding the upper and lower edges of the hoops, substantially as shown and described.

W. E. McLEOD.

Witnesses:
G. H. ORMSBY,
GEO. H. CARLISLE.