Jan. 21, 1958 C. E. ADAMS ET AL 2,820,417

FLUID PRESSURE ENERGY TRANSLATING DEVICE

Filed May 10, 1954 4 Sheets-Sheet 1

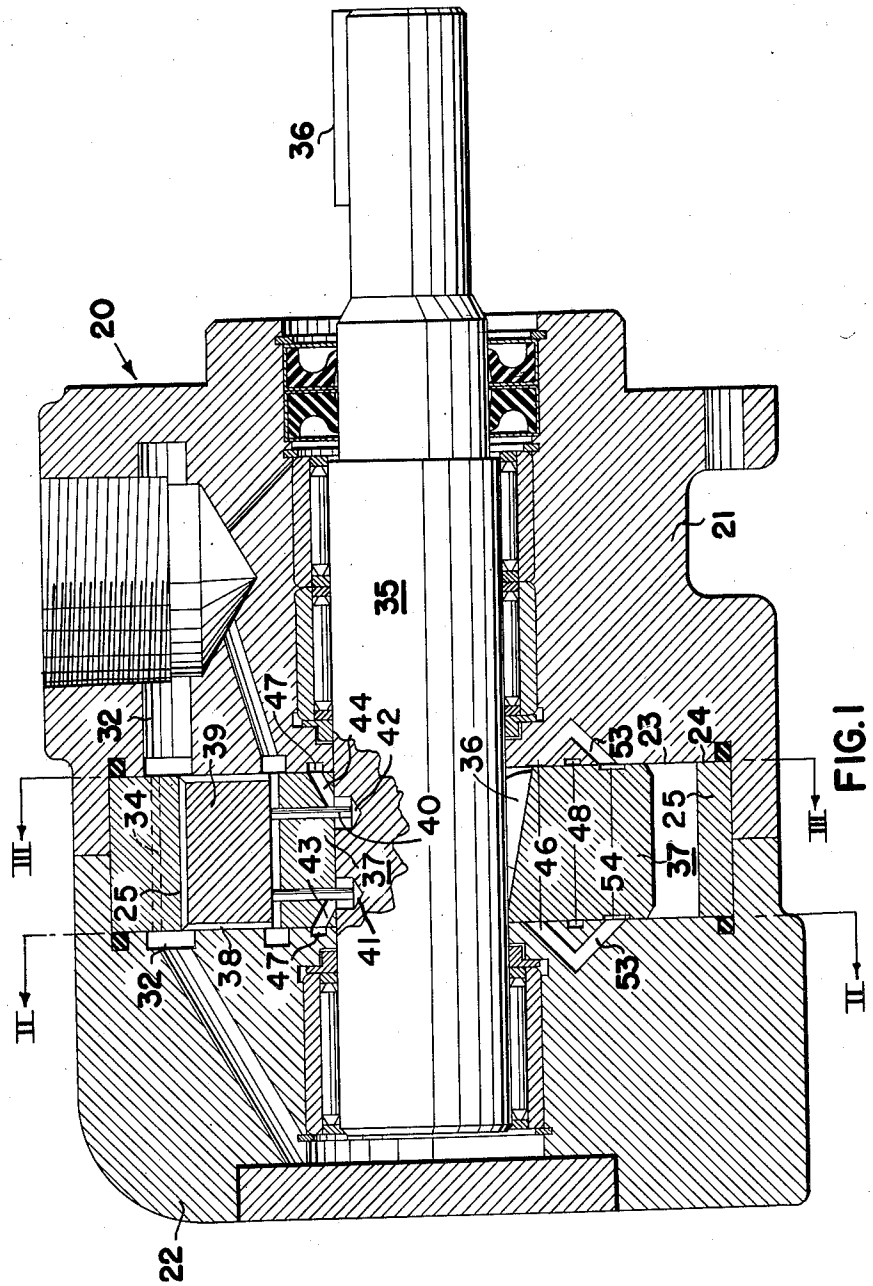

FIG. 1

INVENTORS
CECIL E. ADAMS
YUNG HO SUN

BY Herschel C. Smohundro
attorney

Jan. 21, 1958 C. E. ADAMS ET AL 2,820,417

FLUID PRESSURE ENERGY TRANSLATING DEVICE

Filed May 10, 1954 4 Sheets-Sheet 2

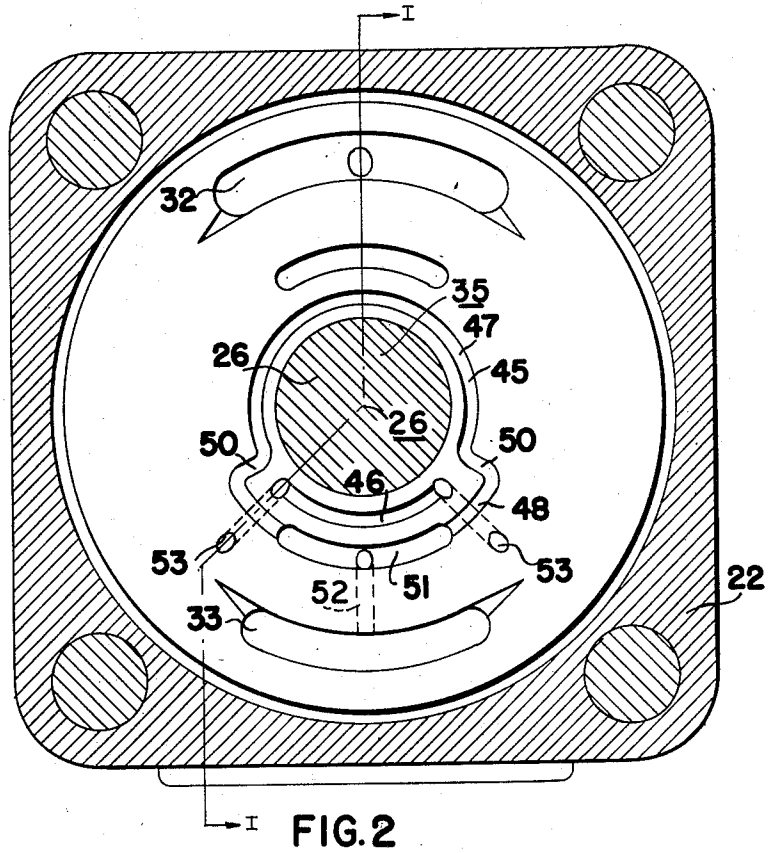

FIG. 2

INVENTORS
CECIL E. ADAMS
YUNG HO SUN
BY
Herschel C. Omohundro

Jan. 21, 1958 C. E. ADAMS ET AL 2,820,417

FLUID PRESSURE ENERGY TRANSLATING DEVICE

Filed May 10, 1954 4 Sheets-Sheet 3

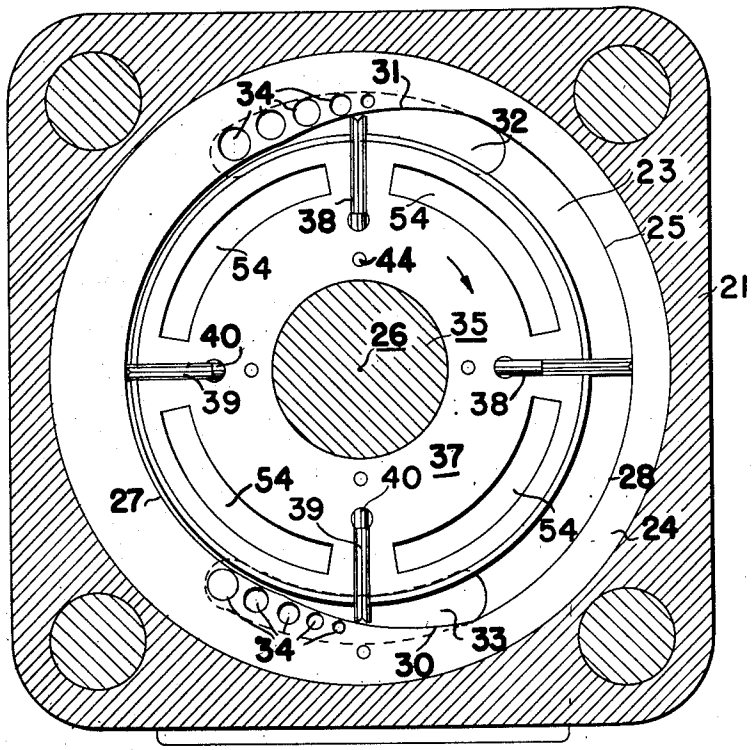

FIG. 3

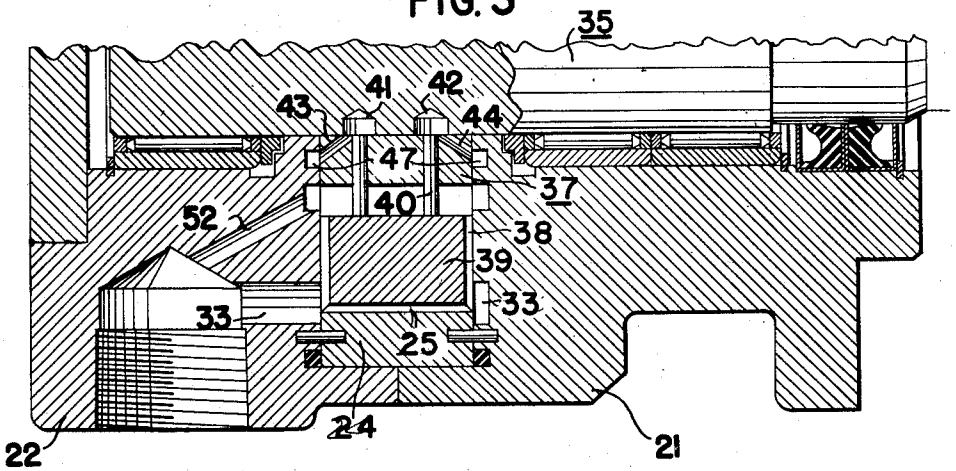

FIG. 4

INVENTORS
CECIL E. ADAMS
YUNG HO SUN

BY Herschel C. Omohundro
attorney

FLUID PRESSURE ENERGY TRANSLATING DEVICE

Filed May 10, 1954 4 Sheets-Sheet 4

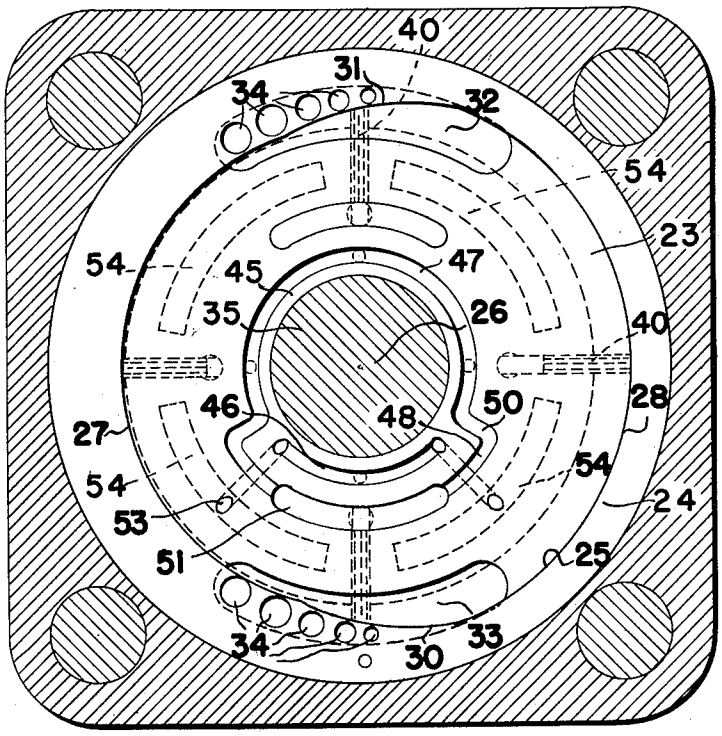

FIG. 5

INVENTORS
CECIL E. ADAMS
YUNG HO SUN
BY
Herschel C. Omohundro
attorney

United States Patent Office 2,820,417 Patented Jan. 21, 1958

2,820,417

FLUID PRESSURE ENERGY TRANSLATING DEVICE

Cecil E. Adams and Yung Ho Sun, Columbus, Ohio, assignors, by mesne assignments, to American Brake Shoe Company, New York, N. Y., a corporation of Delaware

Application May 10, 1954, Serial No. 428,737

10 Claims. (Cl. 103—136)

This invention relates generally to hydraulics and is particularly directed to fluid pressure energy translating devices of the type suitable for use either as fluid pumps or motors.

Still more particularly the invention is directed to fluid pressure energy translating devices of the type having a casing with inlet and outlet ports and a rotor or similar device provided with means for transferring fluid from the inlet to the outlet port upon rotation of the rotor.

An object of this invention is to provide a fluid pressure energy translating device of the type set forth in the preceding paragraph having means for urging the rotor away from the side walls of the casing to reduce friction and prevent metal-to-metal contact with its attendant disadvantages.

Another object of the invention is to provide a fluid pressure energy translating device having a casing with inlet and outlet ports, the casing forming a rotor chamber to receive a rotor body which is provided with vanes or other elements operative when the rotor revolves to transfer fluid from the inlet to the outlet port, the rotor also being provided with pumping means for supplying fluid under pressure to the spaces between the walls of the rotor and the adjacent casing walls, the fluid flowing into such spaces and tending to center the rotor between the casing walls and thus prevent undue wear or premature deterioration of the parts of the device.

It is a further object of the invention to provide a device of the type mentioned in the preceding paragraph with pumping means for supplying fluid independently to the spaces between each side of the rotor and the adjacent casing wall, the pumping means generating variable pressures depending upon the forces tending to urge the rotor toward the side wall.

Another object of the invention is to provide a hydraulic pump or motor having a casing with a rotor supported for rotation therein, the rotor having vane or other suitable piston elements for transferring fluid from the inlet of the casing to the outlet thereof, the casing having cam means for imparting movement to the vane elements, the rotor being provided with piston chambers and pistons in registration with the vane elements and operated by the cam means to generate fluid pressure which is supplied to the spaces between the sides of the rotor and the adjacent casing walls whereby fluid will be caused to flow through such spaces and exert forces tending to urge the rotor away from the casing walls and reduce friction between the casing and the rotor.

A still further object of the invention is to provide the casing of the device mentioned in the preceding paragraph with passage means for applying fluid under pressure generated by the device to the inner ends of the pistons during a portion of the rotation of the rotor to urge the vane elements into proper engagement with the cam means of the casing to increase the efficiency of the device, the casing and the rotor being provided also with passages and recesses for distributing fluid pressure generated by the piston elements actuated by the cam means during another portion of the rotation of the rotor.

Further objects and advantages of the present invention will be apparent from the following description, reference being had to the accompanying drawings wherein a preferred form of embodiment of the invention is clearly shown.

In the drawings:

Fig. 1 is a longitudinal sectional view taken through a fluid pump or motor formed in accordance with the present invention, the plane on which the view is taken being indicated by line I—I of Fig. 2.

Fig. 2 is a vertical transverse sectional view taken through the device shown in Fig. 1 on the plane indicated by the line II—II of such figure.

Fig. 3 is a similar view taken through a different plane indicated by the line III—III of Fig. 1.

Fig. 4 is a fragmentary longitudinal sectional view taken through the device showing the relation of some parts thereof.

Fig. 5 is a vertical transverse sectional view taken on the same plane as Fig. 3 with the rotor and parts carried thereby being shown in phantom.

Referring more particularly to the drawings, the pump is indicated generally by the numeral 20. This pump includes a pair of casing sections 21 and 22 which cooperate to form a rotor chamber 23. These casing sections also support a cam ring 24, the latter being disposed in the chamber 23 and providing a peripheral wall 25 for such chamber which is best seen in Figs. 3 and 5.

This peripheral wall 25 has a plurality of diametrically opposed sections which are concentric with but spaced at different distances from a predetermined axis indicated by the numeral 26 in Figs. 2, 3 and 5. The concentric sections are partially cylindrical, each part of each section being spaced equally from the axis 26, and are indicated by the numerals 27 and 28, these wall sections being connected by ramp sections 30 and 31.

The casing sections 21 and 22 are provided, in registration with the ramps 30 and 31, with inlet and outlet ports 32 and 33 and registering recesses indicated by corresponding numerals in Figs. 1 and 4 of the drawings. In the form of the invention shown, inlet port 32 is formed by the casing section 21 while outlet port 33 is formed by the other casing section 22 (see Figs. 1 and 4). The recesses, indicated by the same numerals and registering with the inlet and outlet ports 32 and 33, are formed in the opposite casing sections. The cam ring 24 is provided with transversely extending openings 34 to establish communication between the inlet and outlet ports and the registering recesses, this arrangement insuring sufficient fluid flow to and from the rotor chamber during rapid operation of the device. The casing sections are provided, as shown in Fig. 1, with bearings for the rotatable support of a shaft 35, one end of this shaft extending beyond the casing 21 and being provided with a key 36 for securing a driving member, not shown, thereto. In the rotor chamber 23, the shaft 35 is provided with a rotor body 37 which may be pressed on or otherwise secured for rotation with the shaft 35.

The rotor 37 has a plurality of substantially radially extending vane slots 38 formed therein to receive for sliding movement vane elements 39. These vane elements are each formed with spaced sealing edges for engagement with the peripheral wall 25 of the rotor chamber and similarly spaced sealing edges for engaging the side walls of the rotor chamber 23 formed by the casing sections 21 and 22. It will be obvious from an inspection of Fig. 3 of the drawings that, when the rotor 37 revolves in the direction indicated by the arrow in this figure, the vane elements 39 will move along the peripheral wall 25, moving outwardly in the vane slots 38 as the outer ends of the vanes

39 traverse the ramp sections 31 and inwardly in such slots as the outer ends of the vanes 39 move over the ramp section 30. During the entire revolution of the rotor, the vane elements will engage the peripheral wall. These vane elements, together with the peripheral wall, the casing walls and the rotor, form fluid transfer pockets or sections between the vane elements. Due to the ramp sections and the difference in spacing between the sections of the peripheral wall and the rotor, the volumetric capacity of each of the fluid transfer pockets or sections change as the rotor 37 revolves. When vanes 39 move over the ramp section 31, the fluid transfer pockets increase in volumetric capacity and fluid is drawn through the inlet port 32 thereinto. When vane elements 39 traverse the ramp section 30, the volumetric capacity of the fluid transfer pockets decreases and fluid is expelled therefrom through outlet port 33.

Since the peripheral wall sections 27 and 28 are concentric with the axis 26 of rotation of the rotor 37, the spaced sealing edges of each vane 39 will engage the peripheral wall sections 27 and 28 to form double seals between adjacent fluid transfer pockets while the vanes 39 are travelling over said concentric wall sections. These spaced sealing edges provide a small fluid pocket therebetween which is connected with the inner end of the vane slot by the grooves formed between the spaced sealing edges at the sides of the vanes. Due to this communication, fluid pressures at the inner and outer ends of the vanes are substantially equal during the movement of the vanes across the peripheral wall sections 27 and 28.

As shown in Figs. 1 and 4, the rotor body 37 is provided with spaced radially extending piston pin bores for the reception of piston pins 40. In the form of the invention shown, a pair of identical piston pins 40 is provided in registration with each vane 39. In registration with the piston pin bores, the shaft 35 is provided with recesses, these recesses communicating with angularly extending ports formed in the rotor body, these recesses being indicated by the numerals 41 and 42 and the ports by the numerals 43 and 44. As viewed in Figs. 1 and 4 of the drawings, ports 43 extend to the left-hand side of the rotor and ports 44 extend to the right-hand side thereof.

The casing sections 21 and 22 form the sides of the rotor chamber 23 and each is provided with grooves 45 and 46, the former being an endless groove having parts 47 and 48 spaced different distances from the axis of rotation of the rotor and connected by radially extending parts or portions 50. The part 47 of the groove 45 is so spaced from the axis of rotation 26 of the rotor that the outer ends of the ports 43 and 44 (see Figs. 1 and 3), depending upon the side of the rotor being considered, will register therewith during a part of the rotation of the rotor 37. Part 48 of the groove 45 is so spaced from the axis of rotation 26 that the inner ends of the vane slots 38 will communicate therewith during a portion of the rotation of the rotor. The portions 48 of the grooves 45 are slightly enlarged, as at 51, these portions being connected by an angularly extending opening or passage 52 with the outlet port 33.

It should be apparent from the drawings and the description thus far given that fluid pressure in the outlet port 33 will be transferred at all times through the passage 52 to the grooves 45 through the portions 51, 48 and 50. During the time ports 43 and 44 are traversing the portions 47 of the grooves 45, fluid under outlet port pressure will be conducted to the recesses 41 and 42 in shaft 35 and applied to the inner ends of the pistons 40. This fluid pressure will urge the pistons in an outward direction causing the vanes 37 to also be urged outwardly into firm engagement with the peripheral wall of the rotor chamber. Since the portion 47 of groove 45 is radially aligned with the major portions of the cylindrical sections or portions 27, 28 and the ramp 31 of cam ring 24 the vanes 39 will be forced radially outwardly by hydraulic fluid under pump output pressure while said vanes traverse said portions of the cam ring 24. The size, i. e., the

effective diameter, of the pistons 40 is so calculated that the most efficient seal will be secured with the least amount of friction between the vane element and the cam ring.

As shown in Figs. 2 and 5, the arcuate grooves 46 extend throughout an angle slightly greater than the length of the ramp 30 and are in radial registration therewith. During the portion of rotation of the rotor embraced by the groove 46, the ports 43 and 44 will register with these grooves 46. The ends of grooves 46 connect with angular drillings 53 formed in the casing walls as shown in Fig. 1, these angular drillings providing passages to establish communication between the grooves 46 and other grooves, recesses or distributing pockets 54 formed in the side walls of the rotor body 37. The grooves, recesses or distributing pockets 54 are spaced outwardly from the axis of rotation of the body 37 a distance slightly greater than the inner ends of the vane slots 38. The communication between the grooves, recesses or distributing pockets 54 and the passages 53 is intermittently established upon rotation of the body 37. It will be seen that, when each vane moves over the ramp 30, the inclination of the ramp will cause the vane to move inwardly in its respective slot 38. This movement will be transmitted by the vane 39 to the piston pins 40 registering therewith causing these pins to move into the pin chambers 41 and 42. This movement will expel fluid from each of the recesses 41 and 42 through the respective ports 43 and 44 to the grooves 46, the fluid flowing from these grooves through passages 53 to the grooves, recesses or distributing pockets 54. The recesses 54 will thus receive fluid under high pressure during the travel of the vane serving the pair of grooves over the ramp section 30 and each of the recesses will receive fluid from an independent means of supply.

In constructing the device shown in Fig. 1, the casing sections and the rotor body are precisely finished to provide a predetermined amount of clearance between the chamber walls and the rotor walls. In one operating model, the clearance employed was .00075 of an inch at each side of the rotor. This clearance permits limited oil flow but restricts the rate so that a fluid pressure will be built up in the recesses 54. When the rotor is spaced equal distances from each chamber side wall, the pressures will be substantially equal. Since the recesses 54 at opposite sides of the rotor body receive liquid positively pumped to them at equal pressures, if the rotor should be moved toward either side wall, the pressure in certain of the recesses 54 adjacent this side wall, will increase while the pressure in the recesses at the opposite side will decrease. The increased pressures will thus tend to force the rotor toward the side of greater clearance until pressures at opposite sides are equalized. At this time, the rotor should be centrally located between the casing side walls.

It will be observed that, after the ports 43 and 44 of any particular portion of the rotor move beyond the groove 46 and register with the portion 47 of groove 45, fluid under outlet port pressure will be supplied to the recesses 41 and 42 to replenish the fluid expelled by the inward movement of piston pins 40. This fluid at outlet port pressure will also urge the piston pins in an outward direction as the vanes 38 move over the ramp section 31. It should be clear that piston pins 40, their chambers and recesses 41 and 42 form pumping devices for supplying fluid under pressure to the recesses 54. It should also be clear that each of these pumping devices has a single port which constitutes a combination inlet and outlet and, when flow from this port is resisted, fluid pressure of high intensity will be developed. Since the piston pins 40 are moved positively into the chambers 41 and 42 a positive flow of fluid from the pumping devices will be secured. There will, therefore, be a positive flow of fluid from the recesses 54 through the surrounding spaces between the rotor and chamber walls. The pressures generated by the pumping devices 40 must, therefore, exceed the pressures developed in the outlet port 33 since the recesses 54 are completely surrounded by zones containing the outlet port

pressure. Due to the positive flow of fluid from the recesses 54, the rotor will be spaced from the chamber sidewalls at all times and metal-to-metal contact will be prevented. Friction and premature deterioration of the parts will thus be avoided.

From the foregoing description and with reference to the drawings, it will be seen that the invention contemplates broadly, a rotary device including a rotor operating in a rotor chamber having spaced walls one adjacent each side or end of the rotor body and spaced slightly therefrom to provide a passageway or escape path at each end of the rotor body and between it and the adjacent rotor chamber wall through which hydraulic fluid is supplied, preferably but not necessarily, from two independent sources, in such manner that equal volumes of hydraulic fluid are positively forced through each of said passageways or escape paths thereby causing the escaping hydraulic fluid to center the rotor body between the said chamber walls. It will also be seen that the adjacent surfaces of the rotor body and rotor chamber wall which cooperate to form each of the above mentioned passageways, or escape paths provide relatively large opposed spaced areas between which the hydraulic fluid is positively forced to escape from the distributing pockets 54 in radial directions.

While the form of embodiment of the present invention as herein disclosed constitutes a preferred form, it is to be understood that other forms might be adopted, all coming within the scope of the claims which follow:

We claim:

1. In a fluid pressure energy translating device of the type having a casing with a rotor chamber and inlet and outlet ports spaced circumferentially thereof, said casing forming a peripheral wall with ramp portions at the inlet and outlet ports; a rotor with vane slots and registering recesses journaled for rotation in said chamber; vane elements carried by said rotor for substantially radial reciprocation in said vane slots under the control of the ramp portions of said peripheral wall; and two independent piston type pumping elements actuated by said vane elements when traversing a predetermined ramp portion to force fluid under pressure from said recesses independently to the rotor chamber at the opposite sides of said rotor.

2. In a fluid pressure energy translating device of the type having a casing with a rotor chamber and inlet and outlet ports spaced circumferentially thereof, said casing including means forming spaced end walls and a peripheral wall with ramp portions at the inlet and outlet ports; a rotor with vane slots and two separate recesses registering therewith journaled for rotation in said chamber the sides of said rotor being spaced slightly from said rotor chamber side walls to provide an escape path for liquid forced therebetween; vane elements carried by said rotor for substantially radial reciprocation in said rotor, one of the ramp portions of said peripheral wall serving to move said vane elements inwardly in said rotor; two piston type pump means operated by inward movement of each of said vanes for displacing liquid from said recesses; confined pockets formed in the sides of said rotor; means forming passages leading one from each of said independent pump means to establish independent communication between the recesses from which fluid is being displaced and said confined pockets at opposite sides of said rotor; and means forming additional passages connecting a fluid pressure port and the recesses from which fluid has been displaced to replenish such fluid.

3. In a fluid pressure energy translating device of the type having a casing forming a rotor chamber with spaced side walls and inlet and outlet ports spaced circumferentially thereof; a rotor disposed for rotation in said rotor chamber, the width of said rotor being slightly less than the spacing between the side walls of the rotor chamber to provide a restricted amount of clearance between each side of the rotor and the adjacent chamber sidewall; pumping means carried by and movable relative to said rotor to transfer fluid from said inlet to said outlet port; and a pair of separate pumping devices in said casing each having an outlet, the outlet of one of said separate pumping devices being connected with the restricted space at one side of said rotor and the outlet of the other of said separate pumping devices being connected with the restricted space at the other side of said rotor, said separate pumping devices being operated upon rotation of said rotor to supply fluid under pressure to such restricted spaces.

4. In a fluid pressure energy translating device of the type having a casing forming a rotor chamber with spaced side walls and inlet and outlet ports spaced circumferentially thereof; a rotor disposed for rotation in said rotor chamber, the width of said rotor being slightly less than the spacing between the side walls of the rotor chamber to provide a restricted amount of clearance between each side of the rotor and the adjacent chamber sidewall; pumping means carried by and movable relative to said rotor to transfer fluid from said inlet to said outlet port; and a separate pair of sets of pumping devices carried by said rotor, each of said separate sets of pumping devices including a plurality of outlet means, the outlet means of the devices of one of said separate sets successively connected with the restricted space at one side of said rotor and the outlet means of the devices of the other of said separate sets of pumping devices being successively connected with the restricted space at the other side of said rotor, such successive connection being effected upon rotation of said rotor, and said pumping devices being operated upon rotation of said rotor to supply fluid under pressure continuously to said restricted spaces.

5. In a fluid pressure energy translating device of the type having a casing forming a rotor chamber with spaced side walls and inlet and outlet ports spaced circumferentially thereof; a rotor disposed for rotation in said rotor chamber, the width of said rotor being slightly less than the spacing between the side walls of the rotor chamber to provide a restricted amount of clearance between each side of the rotor and the adjacent chamber sidewall; vane elements carried by said rotor for radial movement, rotation of said rotor causing said elements to transfer fluid from said inlet to said outlet port; cam means in said casing for controlling the radial movement of said vane elements; and a pair of pumping devices carried by said rotor adjacent each vane element, the outlets of said devices being connected with the restricted spaces at the opposite sides of said rotor during a portion of the rotation of said rotor and connected with a source of fluid during another portion of the rotation of said rotor, said cam means operating said pumping devices through said vane means to receive fluid from said source when connected therewith and discharge fluid to said restricted spaces when connected with the same.

6. In a fluid pressure energy translating device of the type having a casing forming a rotor chamber with spaced side walls and inlet and outlet ports spaced circumferentially thereof; a rotor disposed for rotation in said rotor chamber, the width of said rotor being slightly less than the spacing between the side walls of the rotor chamber to provide a restricted amount of clearance between each side of the rotor and the adjacent chamber sidewall; vane elements carried by said rotor for radial movement, rotation of said rotor causing said elements to transfer fluid from said inlet to said outlet port; cam means in said casing for controlling the radial movement of said vane elements; a pair of pumping devices carried by said rotor adjacent each vane element, each pumping device having a piston chamber with a single combined inlet and outlet and a piston disposed for reciprocation in said chamber, the combination inlet and outlet of one pumping device leading to one side of said rotor and the combination inlet and outlet of the other pumping device leading to the other side of said rotor; passage means in said casing connecting said outlet port with said combination inlet and outlet ports during a portion of the rotation of said

rotor, said cam means serving, during another portion of the rotation of said rotor, to move said pistons to eject fluid from said piston chambers into the restricted spaces at the sides of said rotor.

7. In a fluid pressure energy translating device, a casing defining a rotor chamber with side walls and a peripheral wall having arcuate sections disposed at different distances from a predetermined axis in said chamber, said peripheral wall having ramp sections connecting said arcuate sections, said casing forming inlet and outlet ports at different ramp sections; a rotor journaled for rotation in said chamber about said axis, said rotor being formed with circumferentially spaced radial vane slots and a pair of piston pin chambers registering therewith; vane elements in said vane slots, the outer ends of said elements being formed for engagement with said peripheral wall, the ramp sections of said wall serving to control radial movement of said vanes; piston pins in said piston pin chambers, movement of said vanes over said ramp sections controlling the reciprocation of said piston pins; and means forming a pair of passages one connecting one of the piston pockets in each of said vane slots with the space between one side of said rotor and a side wall of said rotor chamber and the other connecting the other of said piston pockets in each of said vane slots with the space between the other side of said rotor and side wall of said chamber when said vanes travel over the ramp section which causes inward movement of said vanes.

8. In a fluid pressure energy translating device, a casing forming a rotor chamber with spaced side walls and a peripheral wall having arcuate sections disposed at different distances from a predetermined axis in said chamber, said peripheral wall having ramp sections connecting said arcuate sections, said casing forming inlet and outlet ports at different ramp sections; a rotor journaled for rotation about said predetermined axis, said rotor having circumferentially spaced radial vane slots and a pair of piston pin recesses at the inner ends of such slots; vane elements in said vane slots, the outer ends of said vane elements being formed for engagement with said peripheral wall, the ramp sections of said wall serving to control radial movement of said vanes; and piston pins disposed for movement in said piston pin recesses, movement of said vane elements over said ramp sections controlling the reciprocation of said piston pins, said rotor and casing forming a pair of passages one connecting one of the piston pockets in each of said vane slots with the space between one side of said rotor and a side wall of said rotor chamber and the other connecting the other of said piston pockets in each of said vane slots with the space between the other side of said rotor and side wall of said chamber when said vanes travel over the ramp section which causes inward movement of said vanes.

9. In a fluid pressure translating device, casing means forming a rotor chamber having spaced opposed wall means therein; a rotor in said rotor chamber having opposite side wall means each spaced slightly from said opposed chamber wall means and cooperating therewith to provide an escape path for hydraulic fluid; vane means adapted to move with respect to said rotor during operation of the device; two independent liquid pump means of substantially equal pumping capacity operated by movement of said vane means; means for conducting the liquid from one of said pump means to the escape path formed between one side of said rotor and the adjacent rotor chamber wall; and means for conducting the liquid from the other of said pump means to the other of said escape paths.

10. In a fluid pressure translating device, casing means forming a rotor chamber having spaced opposed wall means therein; a rotor in said rotor chamber having opposite side wall means each spaced slightly from said opposed chamber wall means and cooperating therewith to provide an escape path for hydraulic fluid; pumping means adapted to move with respect to said rotor during operation of the device; two separate liquid pump means of substantially equal pumping capacity operated by movement of said first mentioned pumping means, means for conducting the liquid from one of said separate pump means to the escape path formed between one side of said rotor and the adjacent rotor chamber wall; and means for conducting the liquid from the other of said separate pump means to the other of said escape paths.

References Cited in the file of this patent

UNITED STATES PATENTS

1,237,668	Machlet	Aug. 21, 1917
1,245,691	Deysher	Nov. 6, 1917
1,379,248	Carrey	May 24, 1921
1,620,261	Kennedy	Mar. 8, 1927
2,045,014	Kenney et al.	June 23, 1936
2,057,381	Kenney et al.	Oct. 13, 1936
2,255,785	Kendrick	Sept. 16, 1941
2,275,774	Kraissl	Mar. 10, 1942
2,440,593	Miller	Apr. 27, 1948
2,520,724	Jessop	Aug. 29, 1950
2,653,550	Gardiner et al.	Sept. 29, 1953
2,653,551	Rosaen	Sept. 29, 1953
2,660,123	Vlachos	Nov. 24, 1953
2,720,171	Harrington et al.	Oct. 11, 1955

FOREIGN PATENTS

183,861	Austria	Nov. 25, 1955
433,488	Great Britain	Aug. 15, 1935
583,973	France	Nov. 12, 1924