May 8, 1928. 1,669,300

J. W. HUNTER

KNOCKDOWN RECEPTACLE

Filed Aug. 5, 1926. 2 Sheets-Sheet 1

Fig. 1.

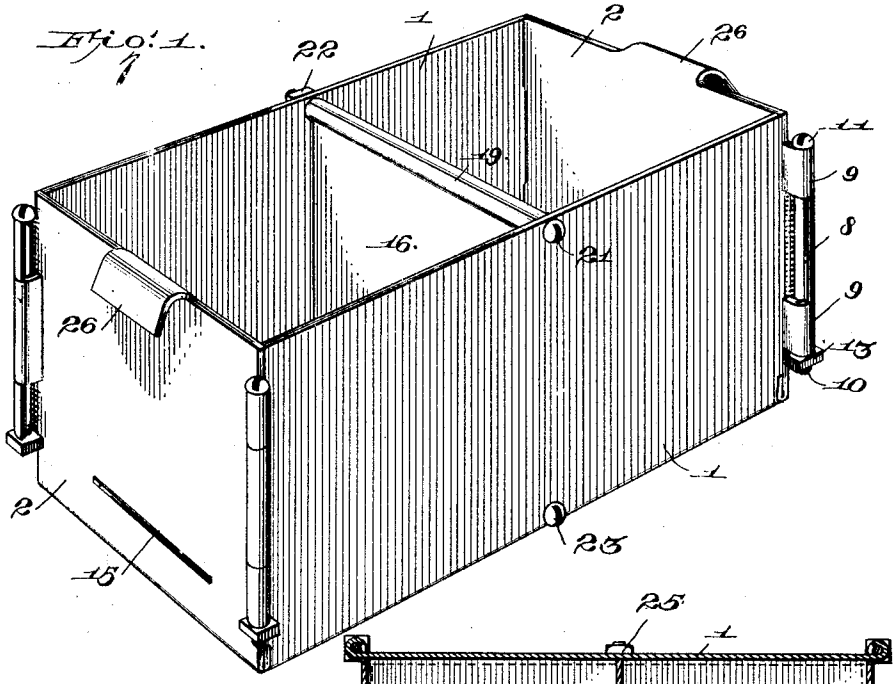

Fig. 2.

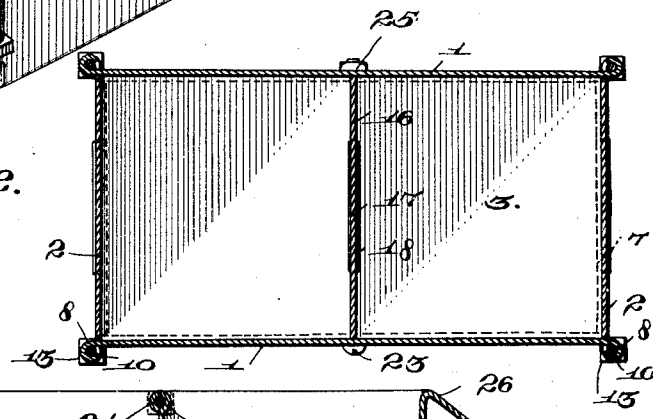

Fig. 3.

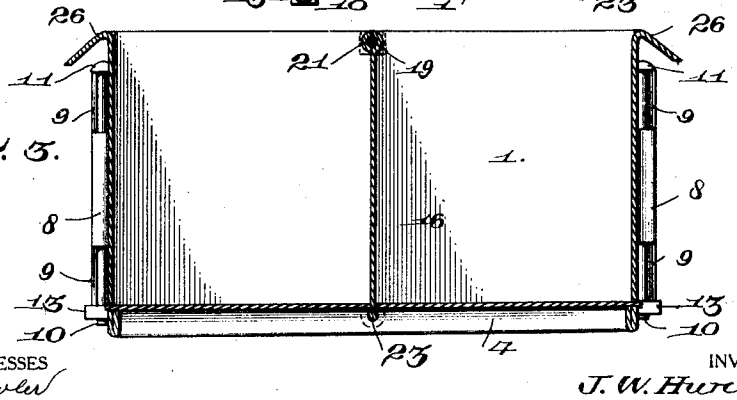

WITNESSES

M. Fowler

INVENTOR

J. W. Hunter

BY Munn & Co.

ATTORNEYS

May 8, 1928. 1,669,300

J. W. HUNTER

KNOCKDOWN RECEPTACLE

Filed Aug. 5, 1926 2 Sheets-Sheet 2

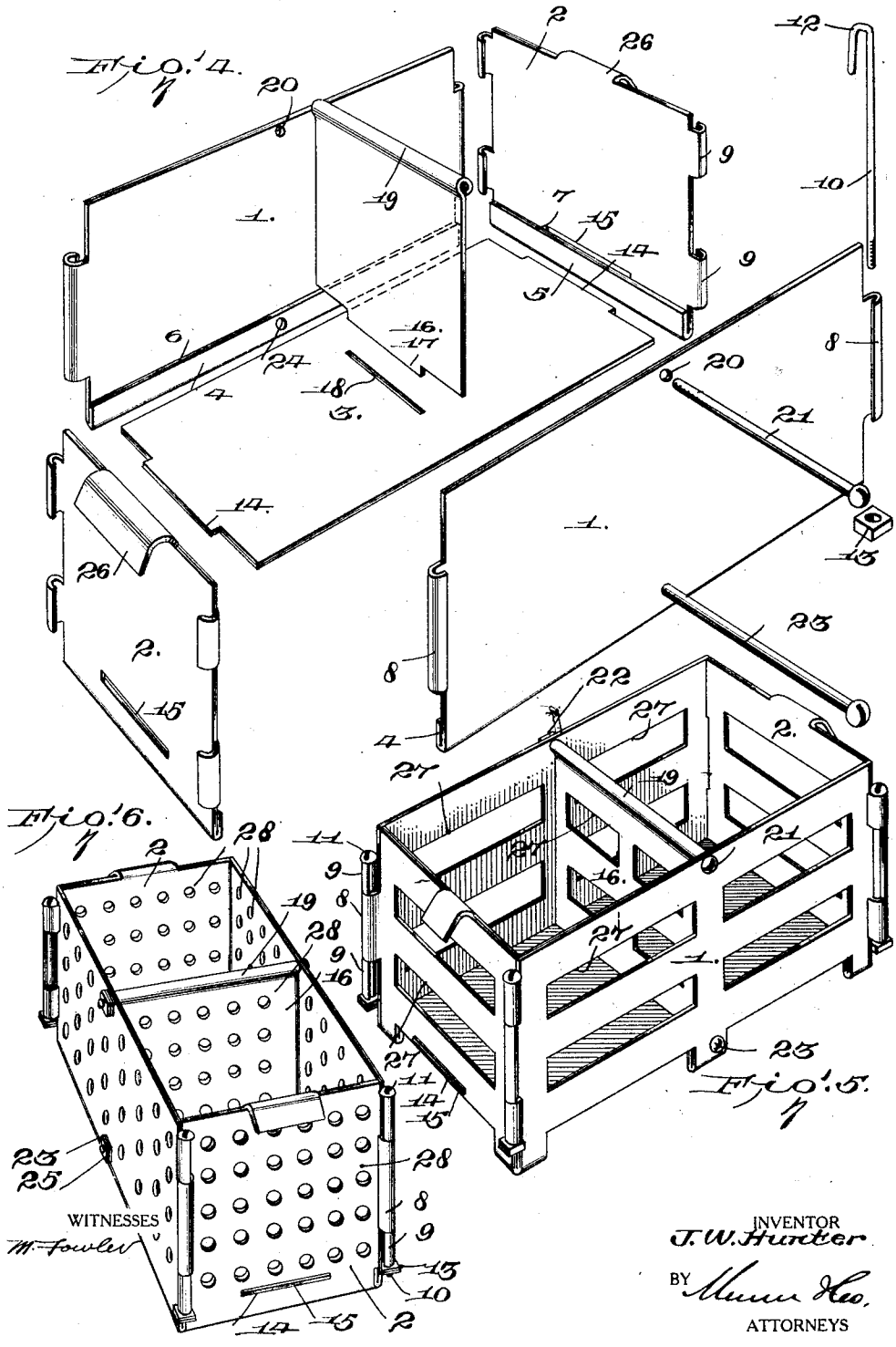

WITNESSES
M. Fowler

INVENTOR
J. W. Hunter
BY Munn & Co.
ATTORNEYS

Patented May 8, 1928. 1,669,300

UNITED STATES PATENT OFFICE.

JAMES W. HUNTER, OF MOBILE, ALABAMA.

KNOCKDOWN RECEPTACLE.

Application filed August 5, 1926. Serial No. 127,450.

My invention relates to improvements in receptacles of the class to which boxes and crates belong and of the type especially adapted for the reception of fruits, vegetables and like articles, and it consists in the combinations, constructions and arrangements herein described and claimed.

An object of the invention is the provision of a receptacle of the character described which comprises members detachably connected without the use of nails and screws and adapted to be detached from one another quickly and easily when desired and stacked so as to occupy a space of but relatively little area.

A further object of the invention is the provision of a knock-down receptacle which comprises members adapted to be made of a light gauge metal and having interengaging portions so that the members when secured together will brace each other and cooperate to produce a strong and durable and at the same time relatively light receptacle.

Other objects and advantages of the invention will be apparent from the following description, considered in conjunction with the accompanying drawings, in which

Figure 1 is a perspective view of a knock-down receptacle embodying the invention, in set up or assembled form,

Figure 2 is a horizontal section through the receptacle,

Figure 3 is a longitudinal vertical section through the receptacle,

Figure 4 is a perspective group view of members of the receptacle which is exhibited in Figure 1 with the members separated from one another, with some of the fastening devices omitted, and with a modified form of corner bolt shown,

Figure 5 is a perspective view of a modified form of receptacle embodying the invention and in set-up position, and

Figure 6 is a perspective view of still another modified form of receptacle embodying the invention and also shown in set-up position.

Referring now to the drawings, and more particularly to Figures 1 to 4, inclusive, it will be noted that a receptacle embodying the invention may comprise a pair of substantially rectangular side members 1, a pair of substantially rectangular end members 2, and a substantially rectangular bottom member 3, all of plate-like form and preferably made of a relatively strong and light-gauge metal although any suitable material may be used. The lower edge portions of the side and end members are bent inwardly and upwardly against the bodies of such members as indicated at 4 and 5 respectively, both for the sake of stiffening and reinforcing the supporting edge portions of such members and to produce the horizontal internal shoulders 6 and 7, respectively, at the sides and ends of the receptacle when the side and end members are secured to one another in a manner which will be presently described.

The side members 1 may have end extensions bent outwardly and rearwardly along arcs of a circle to produce the vertical eye-members 8 which are adapted to mesh or aline with similarly formed vertical eye-members 9 which are provided at the ends of the end members 2. Corner bolts 10, which may have heads of any usual shape, such as the slotted button heads shown at 11 in Figures 1, 3, 5, and 6, or hook-shaped head portions as shown at 12 in Figure 4, are adapted to extend through alined eye members 8 and 9 and to be threadedly engaged by nuts 13. The end members and side members thus will be connected with the respective end members parallel and the respective side members also parallel with each other.

The bottom member 3 has end extensions or tongues 14 adapted to enter and engage with horizontally elongated apertures or slots 15 in the end members 2. The slots 15 are located just above the level of the shoulders 7 so that the end edge portions of the bottom 3 at opposite sides of the tongues 14 will rest on the shoulders 7 and the side edge portions of the bottom will rest on the shoulders 6 when the bottom member has first been placed between the end members 2 with the tongues 14 in the slots 15 and the side members 1 then have been secured to the end members 2 in the manner which has been hereinbefore described. The bottom thus braces the side members to each other and the end members also to each other so that the side members and end members will be maintained at right angles with each other.

The receptacle may include a transverse partition member 16 having a tongue 17 at its lower edge adapted to enter and engage with a transverse slot 18 in the bottom mem-

ber 3. The partition 16 has the upper edge portion thereof bent substantially to circular form in cross section to produce an eye member 19 which will be disposed in alinement with openings 20 in the upper edge portions of the side members 1 when the partition member is disposed in vertical position between the side members 1 with the tongue 17 in the slot 18. An upper cross connecting bolt 21 extends through the alined openings 20 and the interposed eye member 19. The bolt 21 is engaged by a nut 22, and binds the upper edge portions of the side members 1 firmly to the partition 16. A lower cross connecting bolt 23, extends through alined openings 24 in the doubled lower edge portions of the side members underneath the tongue 17 and is engaged by a nut 25, thus staying the lower edge portions of the side members to each other and cooperating with the upper cross connecting bolt 21 and not 22 to clamp the middle portions of the side members securely to the side edges of the partition and to the bottom 3 and to prevent lateral distortion or bulging of the side members of the receptacle in response to internal stresses, as when the receptacle has been filled.

The end members 2 may have extensions at their upper edges bent outwardly and downwardly to produce the handles 26. If the hooked head type of corner bolt is used the hooks will engage over the corner portions of the receptacle and will be prevented from turning accidentally in such manner as might loosen the bolts from their nuts. The side members, bottom, partition, and end members may be imperforate except for the aforesaid openings and slots as shown in the box-like structure exhibited in Figures 1 to 4, inclusive, all of such members or certain of them may be formed with relatively large open slots or apertures 27 to simulate the appearance and to provide the advantages of a slatted crate as in the structure shown in Figure 5, or all or certain of such members may be provided with the open perforations 28 as shown in the crate-like structure which is exhibited in Figure 6. The forms of the device which are exhibited in Figures 5 and 6 otherwise are identical in all respects with the form of the device which is illustrated in Figure 1 and the same reference characters therefore have been used to designate like parts of the three forms of the device. From the foregoing description of the various parts of the device, the operation thereof may be readily understood.

The receptacle is designed especially as a field box for use in gathering all kinds of fruits and vegetables. When the receptacle has served its purpose, the members thereof can be detached from one another and stored in a relatively small space until the receptacle is to be used again. The receptacle then will be set up or assembled in the manner hereinbefore described. It is intended that the members of the receptacle shall be made of rust-proof relatively strong and light metal so that the receptacle not only will be lighter in weight and more conveniently portable than a wooden box of the same capacity but also will be capable of unimpaired use for a relatively long time while an ordinary wooden box will last but a relatively short time in service and moreover is likely when damaged slightly to have rough or ragged sides or edges which mar and otherwise damage fruit and vegetables that are contained therein. The improved receptacle will be free from vermin and insects which may enter the usual wooden field boxes and if required, the improved receptacle can be thoroughly and easily cleaned.

Obviously the invention is susceptable of embodiment in forms other than those which are illustrated in the accompanying drawings and I therefore consider as my own all such modifications and adaptations thereof as fairly fall within the scope of the appended claims.

I claim:—

1. A knock-down receptacle comprising a pair of vertical side members, a pair of vertical end members, and a bottom, means detachably connecting the side members with the end members to maintain the respective side members parallel with each other and the respective end members parallel with each other, said end members having alined slots adjacent to their lower edges, and tongues on the ends of said bottom member adapted to enter and engage with said alined slots, said end members and said side members having the lower edge portions thereof folded inwardly and upwardly onto the bodies of said end members and said side members so that the supporting lower edge portions of said end members and said side members will be of double thickness and to produce shoulders for supporting marginal edge portions of said bottom member.

2. A knock-down receptacle comprising a pair of vertical side members, a pair of vertical end members, and a bottom, means detachably connecting the side members with the end members to maintain the respective side members parallel with each other, said end members having alined slots adjacent to their lower edges and tongues on the ends of said bottom member adapted to enter said slots and removable cross connecting devices between the upper edges and the lower edges of the middle portions of said side members staying said side members to each other, and a transverse vertical partition having a tongue at its lower edge fitting in a slot in said bottom and having an

eye at its upper edge for the reception of a portion of one of said cross connecting devices.

3. A knock-down receptacle comprising sides, end members and a bottom, means detachably connecting said members, said end and side members having a ledge along their inner faces near the bottom thereof to receive and support the bottom member.

4. A knock-down receptacle comprising sides, end members and a bottom, means detachably connecting said members, the end and side members having their lower edges folded inwardly and upwardly against the bodies thereof to provide reinforced lower portions thereof and to produce shoulders for receiving and supporting the marginal portions of the bottom.

JAMES W. HUNTER.