United States Patent

[11] **3,577,164**

[72] Inventors **Giuseppe Re Baratelli**
Glenview;
Theodore J. Galvani, Deerfield, Ill.

[21] Appl. No. **734,744**
[22] Filed **June 5, 1968**
[45] Patented **May 4, 1971**
[73] Assignee **Ramostar Corporation**
Deerfield, Ill.

[54] **REMOTE CONTROL STARTING SYSTEM**
13 Claims, 7 Drawing Figs.

[52] **U.S. Cl.** **290/38,** 290/37, 123/179
[51] **Int. Cl.** **F02n 11/08**
[50] **Field of Search** ..... 290/37, 38; 123/179 (B, Big)

[56] **References Cited**

UNITED STATES PATENTS

2,915,644	12/1959	Hillig	123/179(BIG)
2,952,782	9/1960	Woyden	123/179(BIG)
3,054,904	9/1962	Fuciarelli	290/38
3,040,724	6/1962	Kennemer	290/37X
3,455,403	7/1969	Hawthorne	290/38X

Primary Examiner—G. R. Simmons
Attorney—Johnson, Dienner, Emrich, Verbeck & Wagner

ABSTRACT: A system for remotely controlling electrical devices as in the starting of automobiles and the like employing a transceiver, a receiver-tramsmitter and an actuating solenoid. The transceiver includes circuitry adapted to transmit selected radio frequency signals for performing selected functions during starting of the automobile. The receiver-transmitter includes circuitry adapted to transmit a signal to the transceiver upon receipt of a first check range signal from the transceiver, energize the auto ignition circuit and energize the auto starter upon receipt of a second signal from the transceiver, and energize the actuating solenoid upon receipt of a third signal. The solenoid is adapted to actuate the fuel linkage upon being energized. The receiver-transmitter circuit is further adapted to limit the running time of the engine upon starting, transmit an intermittent signal to the transceiver during initial engine running, and stop the engine upon opening a door of the auto during the initial engine running period.

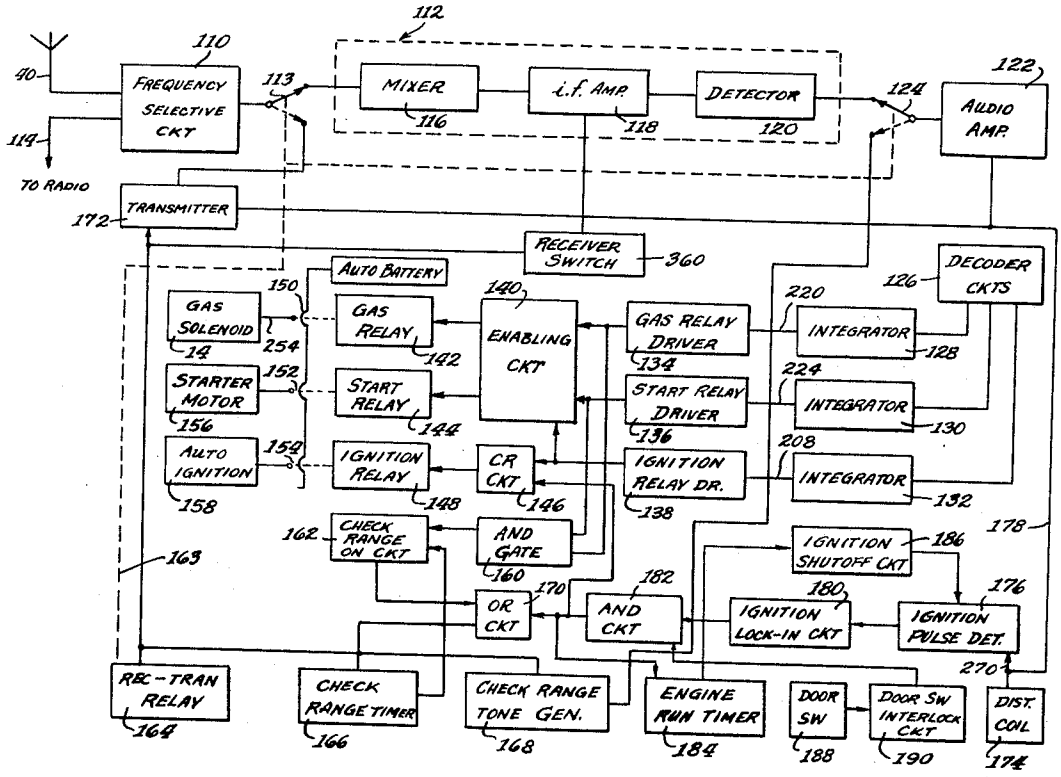

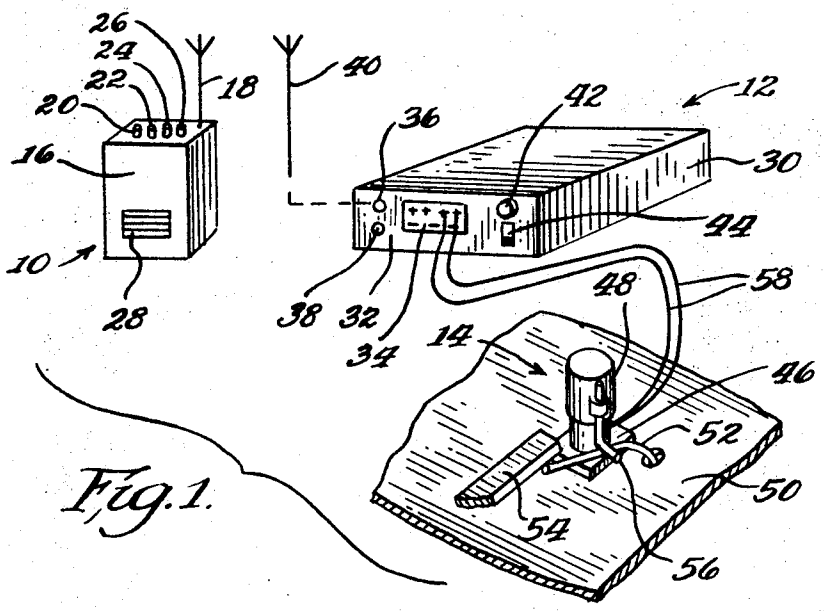

Fig. 1.

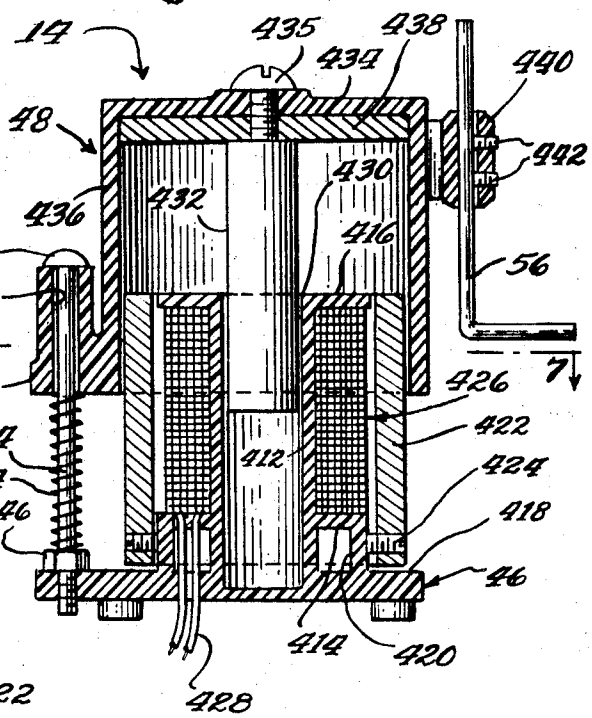

Fig. 6.

Fig. 7.

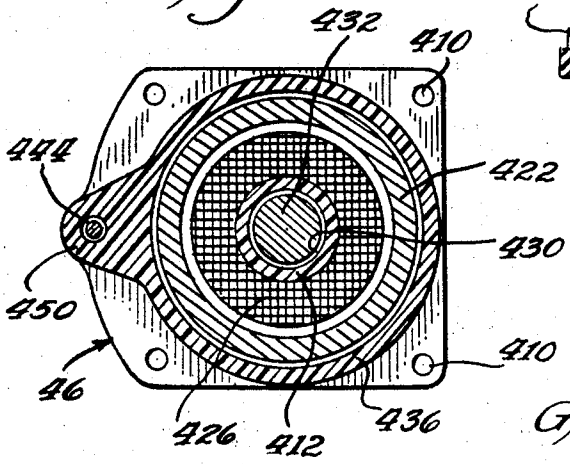

Inventors
Giuseppe Re Baratelli and
Theodore J. Galvani
By Brown, Jackson, Boettcher + Dienner
Attys

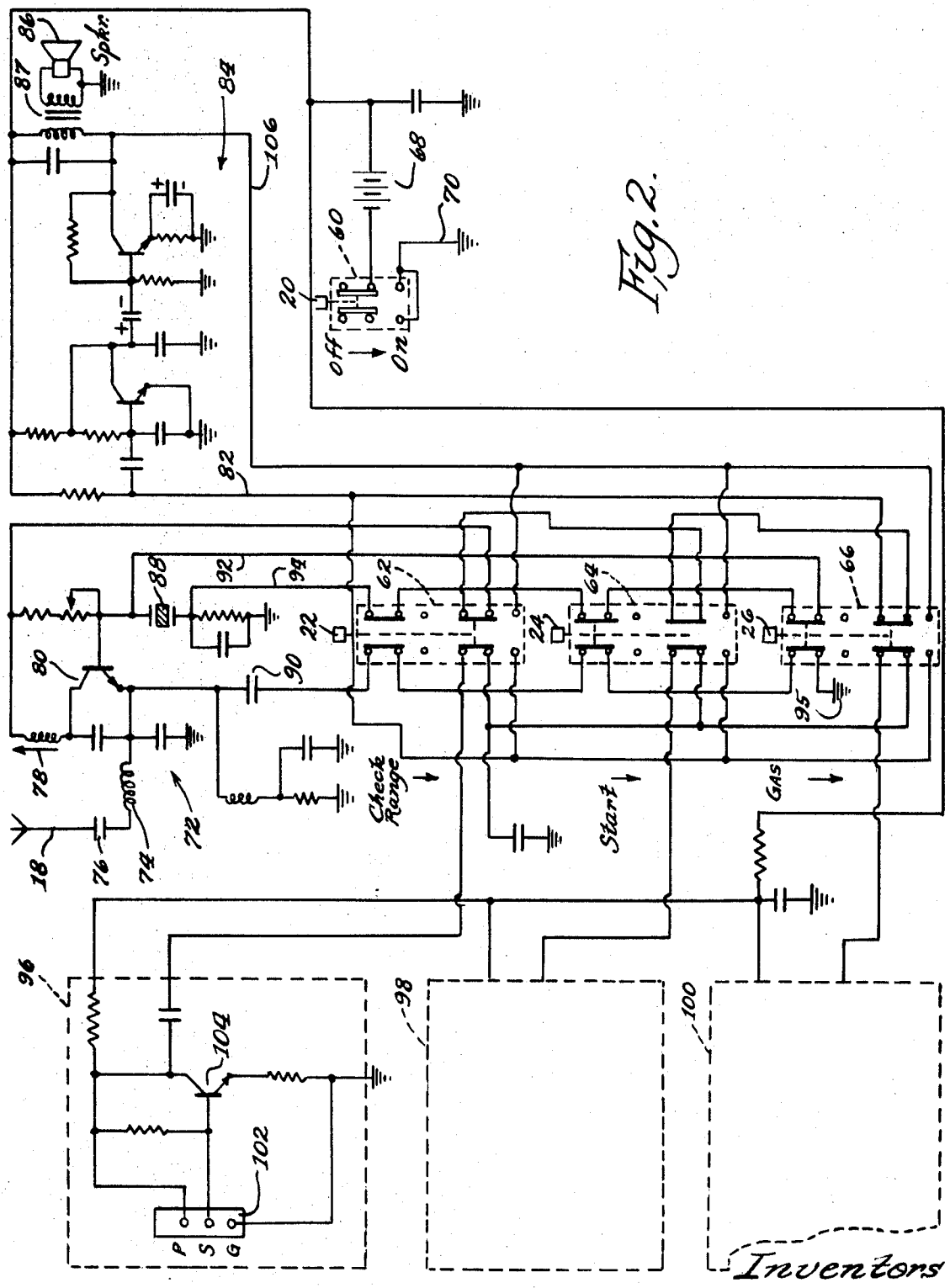

Fig. 2.

Inventors
Giuseppe Re Baratelli and
Theodore J. Galyan
By Brown, Jackson, Boettcher + Dienner
Attys.

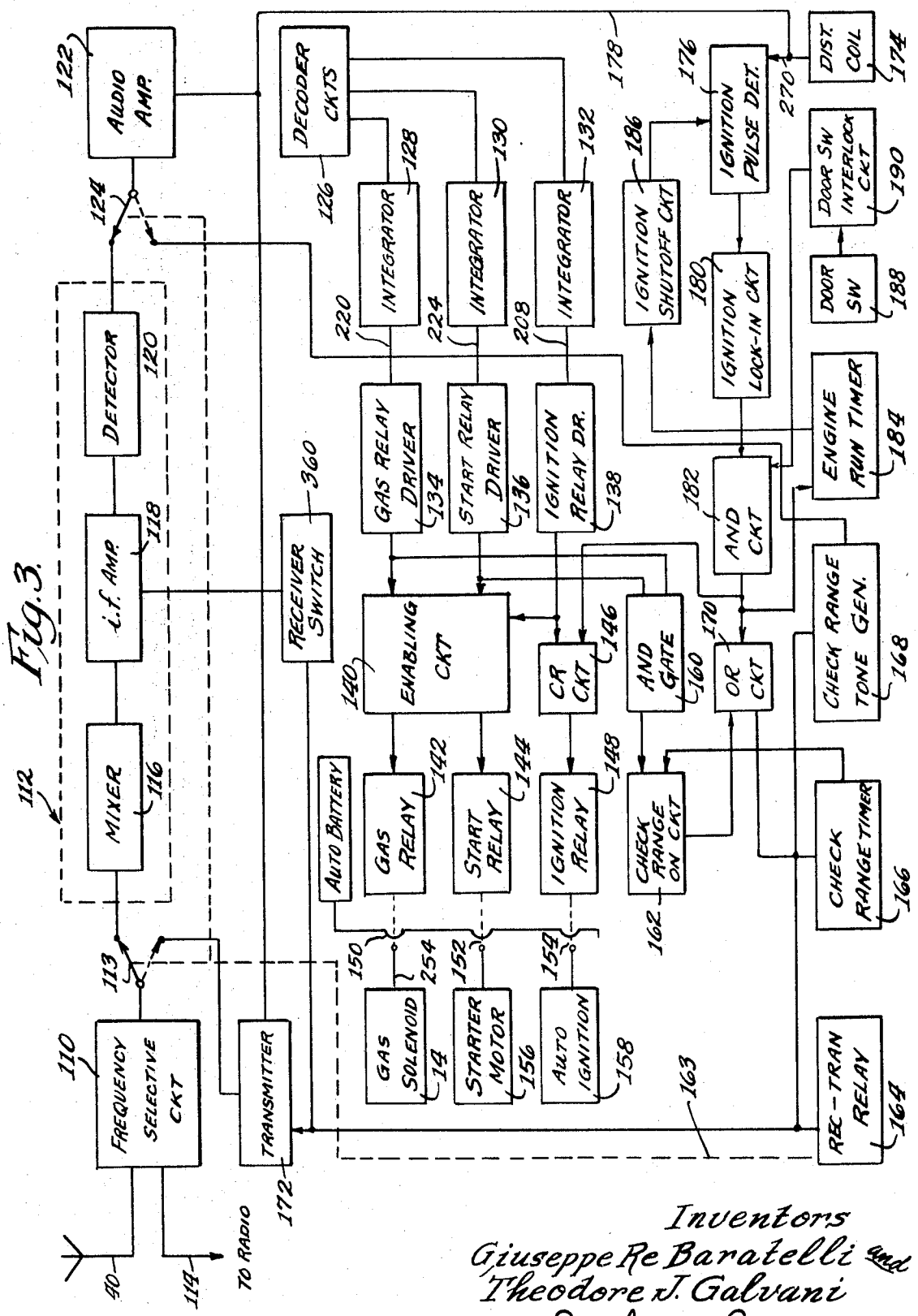

Fig. 3.

Inventors
Giuseppe Re Baratelli and
Theodore J. Galvani
By Brown, Jackson, Boettcher + Dienner
Attys.

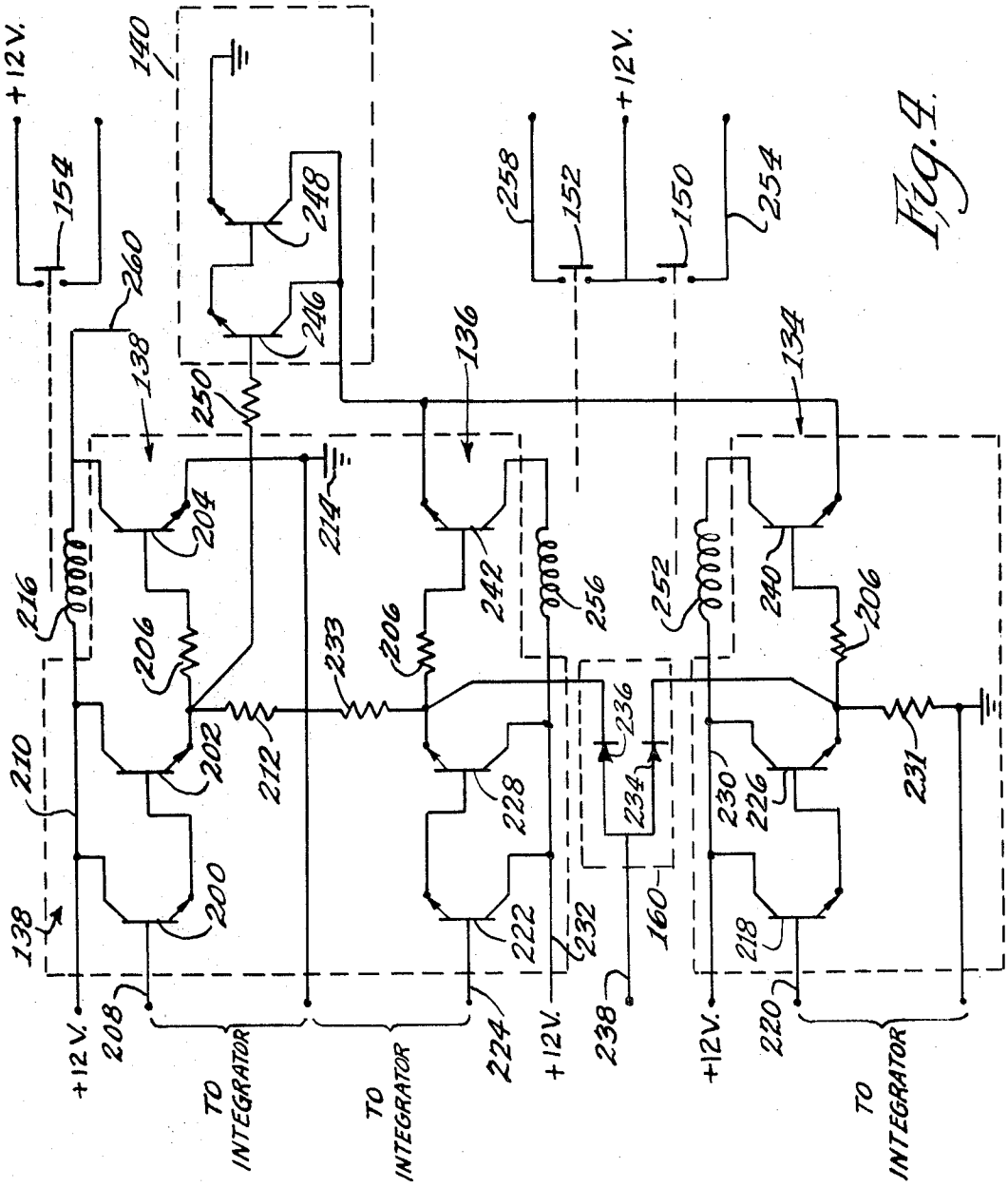

Fig. 4.

Inventors
Giuseppi Re Baratelli and
Theodore J. Galvani
By Brown, Jackson, Boettcher + Dienner
Attys.

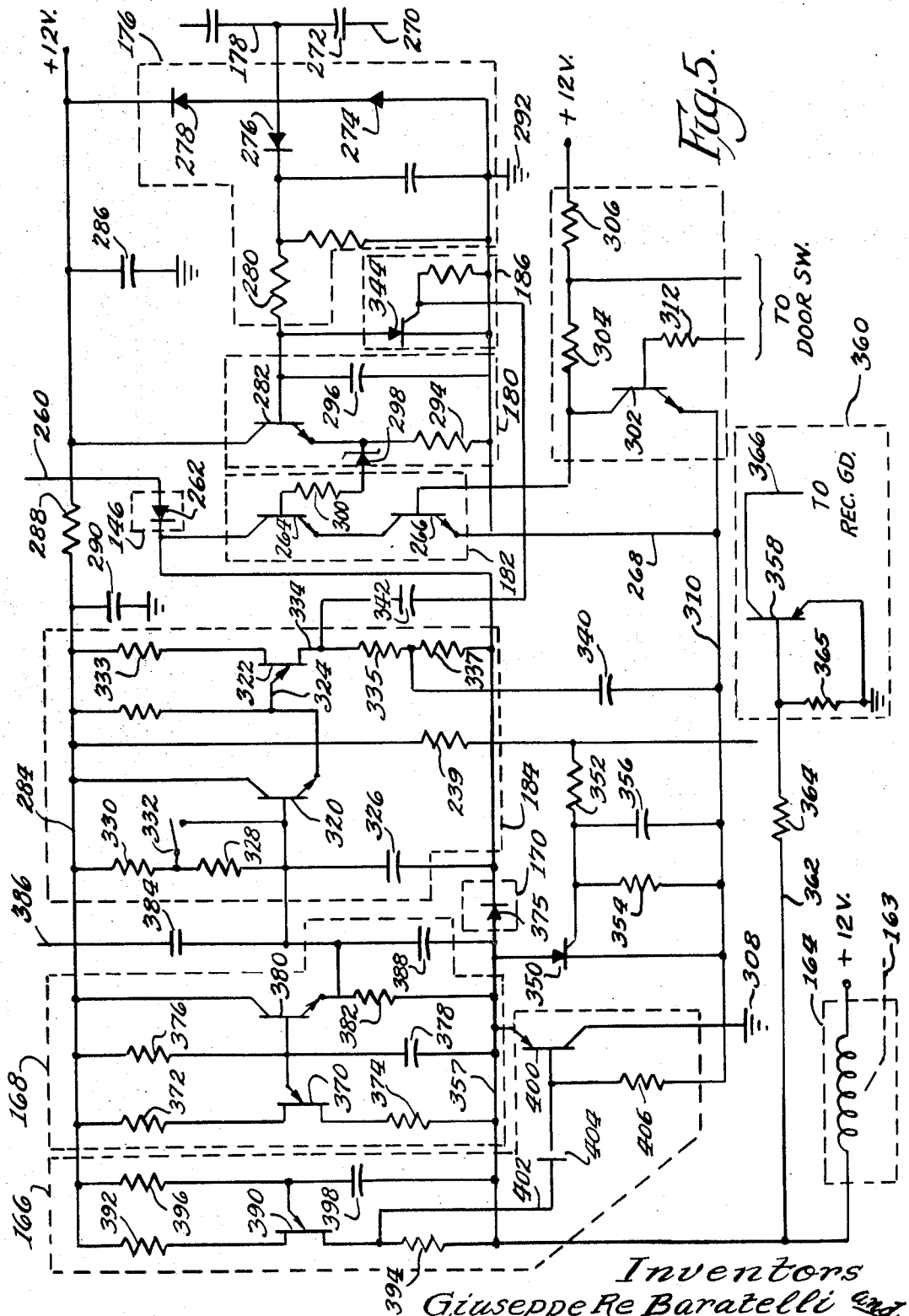

Fig. 5.

Inventors
Giuseppe Re Baratelli and
Theodore J. Galvani
By Brown, Jackson, Boettcher & Dienner
Attys.

REMOTE CONTROL STARTING SYSTEM

BACKGROUND OF THE INVENTION

The present invention relates to electrical control systems, and more particularly to a system for remotely controlling the starting of automobile engines and the like whereby to permit warming or cooling of the automobile interior, as appropriate, before occupancy by the operator, and to permit the engine to reach a normal operating temperature before being driven.

Systems for starting automobile engines independently of the operator or driver are generally known. One such auto starter system employs a thermocouple or thermostat which is disposed within the cooling system, engine compartment, and/or passenger compartment and serves to close a switch to start the auto engine when the cooling fluid, engine compartment and/or passenger compartment reaches a certain predetermined temperature. Another known auto starter system utilizes a clock-switch mechanism which the operator may set to close the engine starter switch at a desired time whereupon the auto engine is caused to start. The first-mentioned system has the disadvantage that the operator has no knowledge or control of the time when the engine is caused to start and run. The last-mentioned system has the particular disadvantage that if the engine does not start at the preselected time, the operator must wait a lengthy period of time for the clock-switch to again approach the starting time.

A known system for remotely starting automobile engines utilizes a control switch remotely positioned from the auto and directly electrically connected to the motor starter switch, thereby allowing the operator to close the remote switch and effect starting of the auto engine. Systems for remotely controlling other electrically actuated devices are also generally known. For example, remotely controlled garage door opening systems using radio signals have been commercially available for some period of time.

The prior art automobile starting systems, as well as the known systems for remotely controlling other electrical devices, exhibit many undesirable characteristics. One of the drawbacks of the prior art remotely controlled starting systems is the failure to adequately prevent operation of the system by an unauthorized person or by an extraneous signal. Another drawback in the known automobile starter systems is the failure to provide means whereby the remote operator can determine if the engine has been successfully started. Another drawback in the known auto starter systems is the failure to provide means for actuating the gas or fuel linkage if the engine initially fails to start. Yet another disadvantage in known prior art starter systems is the failure to prevent an unauthorized person from entering the auto and driving it away after it has been started by the remotely controlled starter system.

SUMMARY OF THE INVENTION

One of the primary objects of the present invention is to provide a novel remotely controlled automobile starter system which overcomes the disadvantages in the known prior art auto starter systems, and which system is highly efficient and dependable in operation.

Another object of the present invention is to provide a remotely controlled auto starter system which includes novel transmitter means adapted to transmit selective radio signals modulated by two or more combined audiofrequencies, thereby substantially eliminating the possibility of actuation of the system by an unauthorized person or by an extraneous signal.

Another object of the present invention is to provide a novel remotely controlled auto starter system utilizing receiver-transmitter means adapted to receive selected radio signals from a transceiver, and which receiver-transmitter means includes circuitry adapted to transmit a tone modulated signal to the transceiver upon receipt of a "check range" signal from the transceiver, the "check range" signal being a particular combination of modulation frequencies applied to an RF carrier.

Another object of the present invention is to provide a remotely controlled auto starter system as described wherein the receiver-transmitter includes circuit means adapted to receive radio signals from the transceiver and selectively effect energizing of an auto ignition circuit and starter motor therefor.

Another object of the present invention is to provide a remotely controlled auto starter system as described wherein the receiver-transmitter includes circuit means to limit the time duration of engine running upon initial starting thereof.

Another object of the present invention is to provide a remotely controlled auto starter system as described wherein the receiver-transmitter includes circuit means adapted to terminate engine running upon the opening of one of the car doors during the initial starting period, or upon actuating a switch attached to the gear shift lever, a parking brake, or a pressure sensitive switch placed on the floor under the operator's feet or on the springs of the drivers seat.

Still another object of the present invention is to provide a remotely controlled auto starter system as described including an actuating solenoid adapted to depress the fuel linkage of the auto upon transmission of a selected signal to the receiver-transmitter from the transceiver.

In a preferred embodiment of a remotely controlled automobile starter system in accordance with the present invention, a transceiver "hand unit" is provided to transmit selected radio signals to a receiver-transmitter disposed within an automobile. Each of the transmitted radio signals comprises two or more combined audio frequencies and is effective to perform a particular function in the automobile starter system. A first check range signal is effective to establish whether the receiver-transmitter is within range of the radio signals to start the automobile engine. A second transmitted radio signal is effective to energize the auto ignition circuit and energize the engine starter. A third transmitted radio signal is effective to actuate a solenoid for depressing the gas or fuel linkage supplying fuel to the auto engine.

The receiver-transmitter installed in the vehicle includes a range tone generator to effect transmittal of a signal to the transceiver upon receipt of the check range signal. The receiver-transmitter is adapted to energize the auto ignition circuit and energize the auto starter to start the engine upon receipt of a suitably coded radio signal from the transceiver. The receiver-transmitter further includes circuit means to detect ignition pulses from the ignition pulse coil upon engine starting and transmit a pulsed tone signal to the transceiver to indicate that the engine is running. The receiver-transmitter includes a circuit means to limit the initial engine running time to a preselected value, and means to terminate initial engine running upon the opening of one of the car doors, thereby preventing unauthorized entry and driving away of the car. The receiver-transmitter includes circuit means to energize the actuating solenoid upon receipt of a different suitably coded signal from the transceiver, the actuating solenoid being adapted to depress the fuel or gas linkage to supply additional fuel to the auto engine. Starting of the auto engine converts the receiver-transmitter to a transmitting state, thereby preventing receipt of signals to effect the above starting operations after the engine is running.

Further objects and advantages of our invention, together with the organization and manner of operation thereof, may best be understood by reference to the following description of a preferred embodiment of the invention when taken in conjunction with the accompanying drawings, in which like reference numerals designate like parts throughout the several views.

BRIEF DESCRIPTION OF THE DRAWINGS

FIG. 1 is a diagrammatic illustration of the components of a preferred embodiment of the present invention, the actuating solenoid being illustrated in cooperation with an accelerator linkage of an automobile;

FIG. 2 is a circuit diagram of the hand transceiver illustrated in FIG. 1;

FIG. 3 is a block diagram illustrating the circuitry of the transmitter-receiver of FIG. 1 and selected associated circuitry;

FIGS. 4 and 5 are circuit diagrams illustrating selected portions of the receiver-transmitter circuit;

FIG. 6 is a longitudinal sectional view of the actuating solenoid shown in FIG. 1; and

FIG. 7 is a transverse sectional view taken along the lines 7–7 of FIG. 6 and looking in the direction of the arrows.

DESCRIPTION OF THE PREFERRED EMBODIMENT

General Description

Referring now to the drawings, and in particular to FIG. 1, a system in accordance with a preferred embodiment of the present invention for remotely starting an automobile engine is illustrated as comprising a hand transceiver unit, indicated generally at 10, a receiver-transmitter unit, indicated generally at 12, and an actuating solenoid, indicated generally at 14. In general, the hand unit 10 is adapted to transmit selective radio signals to the receiver-transmitter 12 which is suitably mounted within an automobile. Upon receipt of the radio signals, the receiver-transmitter 12 is adapted to effect either closing or energizing of the automobile ignition switch with simultaneous energizing of the engine starter motor, or energizing of the actuating solenoid 14, or the establishment of a check range signal or a "run" signal which is transmitted to the transceiver 10, as will be more fully described hereinbelow.

The hand transceiver 10 comprises a lightweight casing or housing 16 made from a suitable lightweight material, such as plastic. The casing 16 serves to enclose the transceiver circuitry and has a conventional telescopic or extendable antenna 18 supported thereon. A plurality of pushbuttons 20, 22, 24 and 26 are suitably supported on an upper surface of the casing 16 for selective actuation of associated switch means by the operator as will be more fully described hereinbelow. The pushbuttons 20, 22, 24 and 26 are termed the "on-off" button, the "check range" button, the "start" button and the "gas" button, respectively. The pushbutton 20 is such that it will remain depressed upon removing the initial depressing force, but will return to its upward position upon application of a second downward force. The pushbuttons 22, 24 and 26 are urged to normal upward positions whenever depressing forces are not applied thereto. A louvered opening 28 is provided in the casing 16 behind which is suitably supported a conventional speaker to be described hereinafter.

The receiver-transmitter 12 includes a casing or housing 30 which serves to enclose the circuitry of the receiver-transmitter and may be made of any suitable material, such as plastic or aluminum. The receiver-transmitter 12 is adapted to be installed in an automobile for remotely starting the auto through the remotely disposed hand transceiver unit 10. The casing 30 of the receiver-transmitter 12 includes a front surface 32 having connector outlets 34 therein which allow the receiver-transmitter circuitry to be connected to selected elements of the automobile electrical system, as will be more fully described hereinbelow. A pair of connectors 36 and 38 are also provided in the surface 32 of casing 30 and provide a means for coupling the receiver-transmitter to a conventional antenna 40 which may comprise the radio antenna of the automobile radio. The antenna 40 is connected through the connector 36 to a conventional frequency selective circuit within the receiver-transmitter 12 and then to the car radio through the connector 38. The frequency selector circuit serves to prevent radio signals transmitted by the hand transceiver 10 from affecting the car radio while such radio signals are applied to the circuitry of the receiver-transmitter 12. This circuit also prevents loss of signal to the automobile radio due to the presence of the receiver-transmitter circuitry for both the conventional AM and FM bands. A conventional bayonet-type connection fuse holder 42 and an engine running time selection switch 44 are provided on the surface 32 of casing 30. The time selection switch 44 provides a means for selectively varying the running period of the engine after initial starting, as will be more fully described below.

The actuating solenoid 14 includes a base portion 46 and an upper axially movable portion 48. The base portion 46 is suitably secured to a floor panel, a portion of which is shown at 50, of the automobile generally adjacent a conventional accelerator linkage member 52 which is depressible through a pivotally mounted accelerator pedal 54 to selectively increase the flow of fuel to the automobile engine in a known manner.

The upper axially movable portion 48 of the actuating solenoid 14 has an L-shaped actuating rod 56 adjustably secured thereto, such that the leg portion of the rod overlies the accelerator linkage 52 when the upper portion 48 of the solenoid is in its uppermost position. Energizing the actuating solenoid effects lowering of the upper portion 48 thereof causing the L-shaped rod 56 to depress the accelerator linkage 52. For automobiles having an accelerator pedal which is operable to control the fuel supply to the engine without using an accelerator linkage of the type shown at 52, the actuating solenoid 14 may be suitably positioned on the floor panel 50 of the automobile such that the actuating rod 56 directly overlies the accelerator pedal to effect direct depression thereof upon energizing the solenoid. For purposes of illustration, the actuating solenoid 14 is illustrated as being electrically connected to one of the connectors 34 of the receiver-transmitter 12 through suitable conductors 58.

The general operation of the remotely controlled auto starter system illustrated in FIG. 1 is as follows. Having connected the receiver-transmitter 12 to the automobile power supply storage battery, to the conventional ignition switch in the ignition circuit of the auto, to the starter motor of the auto, and to the actuating solenoid 14, the operator may transmit a selected signal from the hand transceiver unit 10 remotely positioned from the automobile to effect starting thereof. The operator initially depresses the on-off button 20 of the hand transceiver unit 10 to connect the transceiver circuitry to a power supply within the casing 16, such power supply comprising, for example, conventional carbon-zinc batteries. With only the on-off button 20 depressed, the transceiver acts as a receiver. Depressing the check range button 22 on the hand transceiver unit converts the unit to a transmitter and transmits a check range signal to the receiver-transmitter 12. Subsequent release of button 22 reconverts the transceiver 10 to a receiver. Upon receipt of the check range signal, the receiver-transmitter 12 transmits a timed uniform signal to the hand transceiver 10 to produce an audible tone indicating that the automobile is within range of the transceiver 10 for purposes of starting the engine thereof. Subsequent depression of the start button 24 on the transceiver 10 transmits a second signal to the receiver-transmitter 12 to effect closing of the auto ignition switch and energizing of the starter motor to start the engine. If the engine should fail to start in this manner, the operator may depress the gas button 26 on the hand transceiver unit 10 whereupon the actuating solenoid 14 is energized to effect depressing of the accelerator linkage 52, thereby to open the fuel valve of the engine carburetor in a conventional manner. Thereafter, the operator may again depress the start button 24 of the hand transceiver unit to again close the auto ignition circuit and energize the starter motor. As will be more fully described hereinbelow, the receiver-transmitter 12 includes circuitry adapted to transmit a pulsed tone signal to the hand transceiver 10 during running of the auto engine. The receiver-transmitter circuitry further is adapted to limit the running time of the engine upon starting thereof, such running time being selectively variable through the time switch 44 on the front face 32 of the receiver-transmitter casing 30. By so limiting the running period of the engine, the engine will be caused to stop after such period should the operator be detained or otherwise to fail to drive the car after starting it.

Detailed Description of the Transceiver Circuitry

Referring now to FIG. 2, the on-off pushbutton 20 of the transceiver 10 is shown associated with a double-pole double-throw switch illustrated schematically at 60. The pushbuttons 22, 24 and 26 are associated with four-pole double-throw switches, illustrated schematically at 62, 64 and 66, respectively.

The switch 60 associated with the on-off pushbutton 20 is connected between a DC low voltage source, such as a 9-volt battery 68, and a ground conductor 70 such that when the pushbutton 20 is depressed, the voltage source 68 is connected to ground and thereby to the remaining circuit elements of the hand transceiver unit 10. With the pushbutton 20 depressed to connect the DC voltage source 68 to the remaining circuit elements, and the pushbuttons 22, 24 and 26 in their normal upper positions, the transceiver 10 acts as a receiver. For this purpose, the transceiver circuitry includes a receiver such as a conventional superregenerative detector, indicated generally at 72, which is coupled to the antenna 18 through an inductance 74 and a capacitor 76. A tunable RF coil 78 is connected in series with the collector element of a transistor 80 of the detector 72, the collector of the transistor being connected through the tunable RF coil 78 and an input conductor 82 to a conventional audio amplifier, indicated generally at 84. An appropriate signal received by the detector 72 is amplified by the audio amplifier 84 and applied to a speaker 86 through a coupling transformer 87. The speaker 86 is positioned behind the louvered opening 28 in the casing 16 of the transceiver 10 as above described with respect to FIG. 1.

The superregenerative detector 72 is converted from a receiver to a crystal controlled transmitter by connecting a piezoelectric crystal 88 in circuit with the base element of the transistor 80 and disconnecting a capacitor 90 from the emitter circuit. The base circuit of the transistor 80 is normally shorted across the piezoelectric crystal 88 through conductors 92, 94 and switches 62, 64 and 66. Correspondingly, the capacitor 90 is normally connected between the emitter element of the transistor 80 and a ground connection 95 through switches 62, 64 and 66. It can be seen that depressing any of the pushbuttons 22, 24 or 26 will break the shorting circuit of conductors 92 and 94 around crystal 88, thereby connecting the piezoelectric crystal into the transistor base circuit while disconnecting the capacitor 90 from the ground connection 95. The piezoelectric crystal 88 when connected in circuit with the base of the transistor 80 to convert the receiver 72 to a transmitter, establishes the RF frequency of the transmitter in a known manner.

As noted above, when either the check range pushbutton 22, the start pushbutton 24, or the gas pushbutton 26 is depressed, the on-off pushbutton 20 having been depressed to connect the voltage source 68 to the transceiver circuitry, signals corresponding to each of the pushbuttons 22, 24 and 26 are transmitted. The signal transmitted upon depression of one of the pushbuttons 22, 24 and 26 is obtained by amplitude modulating the RF carrier of the piezoelectric crystal 88 by selectively applying modulating frequencies from tone generators to the audio amplifier and thence to the transmitter stage. The modulating frequencies applied to modulate the RF carrier are provided by a plurality of conventional tone generators, three tone generators being indicated generally at 96, 98 and 100. The tone generators are connected through the switches 62, 64 and 66 to the audio amplifier 84 such that selective frequency combinations of two of the three tone generators may be connected to the audio amplifier. When the transceiver is operated as a transmitter the audio amplifier is used as a modulator for the RF stage. That is, to amplitude modulate the transmitted signal.

The tone generators 96, 98 and 100 are generally similar in construction and each employs a tuning fork element, one of which is indicated schematically at 102 for the tone generator 96. The tuning fork elements are connected in a conventional manner through amplifying transistors, such as 104, to the voltage source 68 through the switches 62, 64 and 66, such that the tuning forks are continually energized when the on-off switch 20 is depressed. It has been found that the use of tone generators utilizing tuning fork elements provides the desired stabilization and operating efficiency over wide temperature ranges. The tone generators 96, 98 and 100 are connected in circuit with the switches 62 64 and 66, such that depression of any one of the pushbuttons 22, 24 and 26 will apply the modulating frequencies of two of the three tone generators to the audio amplifier 84 and thence to the transmitter 80. For example, depression of the check range pushbutton 22 will connect the audio modulating frequencies of the tone generators 98 and 100 in circuit with the amplifier 84. In similar fashion, depression of the start pushbutton 24 will connect the audio modulating frequencies of the tone generators 96 and 100 in circuit with the amplifier 84. Similarly, depression of the gas pushbutton 26 will connect the audio modulating frequencies of the tone generators 96 and 98 in circuit with the amplifier 84.

While the transceiver 10 has been described as utilizing three tone generators or audio oscillators 96, 98 and 100, the frequencies of two of which are selectively combined to amplitude modulate the RF frequency of the piezoelectric element 88 during transmission of radio signals, it will be understood that any desired number of tone generators or audio oscillators may be utilized with the audio modulating frequencies of selected combinations of the audio oscillators being combined through appropriate connection with the switches 62, 64 and 66 to vary the radio signals transmitted. The precise stable audio frequencies provided by the tuning fork elements permit narrow separation of the audio frequencies used, thereby increasing the number of combinations of audiofrequencies which may be used to modulate the transmitter. By combining two or more of the audiofrequencies of the tone generators in establishing the radio signals from the transceiver, the subject auto starter system substantially reduces the possibility of actuation by extraneous radio signals or by unauthorized persons attempting to duplicate the radio signals necessary to actuate the system.

General Description of the Receiver-Transmitter Circuitry

Referring now to FIG. 3, the circuit elements comprising the receiver-transmitter 12 are shown in block diagram form. The circuit elements of the receiver-transmitter 12 are normally connected as a receiver adapted to receive the radio signals from the transceiver 10 and effect selective energizing or actuation of the ignition switch and starter switch of the automobile, as well as energizing the actuating solenoid 14 to depress the accelerator linkage of the automobile.

Considering the receiver-transmitter circuit in its receiving state, the signals received by the antenna 40 are fed to a conventional frequency selective circuit 110. The frequency selective circuit 110 serves to pass signals in a selected frequency range to a receiver, indicated generally at 112, through a relay switch 113. The receiver 112 is preferably of the crystal-controlled superheterodyne type for precise narrow band RF selectivity. It has been found desirable to provide a frequency selective circuit which will pass radio signals in the range of 27 megacycles to the receiver 112 while passing the signals outside this range to the auto radio through a suitable conductor 114. The receiver 112 includes a conventional mixer circuit 116, a conventional IF amplifier 118, and a conventional detector circuit 120 which converts the IF signal from the amplifier 118 to an audio signal. The signal from the detector 120 is fed to a conventional audio amplifier 122 through a relay switch 124. As will be more fully described below, the relay switches 113 and 124 are movable from the positions shown in solid lines in FIG. 3 to the positions shown in dash lines to convert the receiver-transmitter to a transmitting state.

The audio amplifier **122** may comprise a conventional two-stage audio amplifier, the output signal of which is fed to a conventional decoder circuit **126**. The decoder circuit **126** preferably comprises a conventional multichannel resonant reed relay which is activated by specific audiofrequencies and serves to decode the signals received from the audio amplifier **122** and feed the resulting output signals to separate integrating circuits **128, 130** and **132**. The integraters convert the pulsating AC signals from the decoder circuit **126** to steady DC signals. The DC signals from the integraters **128, 130** and **132** are fed to relay drivers **134, 136** and **138**, respectively, for the fuel, start and ignition functions utilized in starting an automobile engine.

The output signals from the gas relay driver **134** and the start relay driver **136** are fed to a gas relay **142** and a start relay **144**, respectively, through an enabling circuit **140**. The enabling circuit **140** also receives a signal from the ignition relay driver **138** and is adapted to prevent energizing of the gas or start relays **142** and **144** until the enabling circuit receives a signal from the ignition relay driver. The output signal from the ignition relay driver **138** is also fed to an OR circuit **146** which supplies a signal to an ignition relay **148**.

The gas relay **142**, the start relay **144**, and the ignition relay **148** are associated with relay switches **150, 152** and **154**, respectively. The relay switches **150, 152** and **154**, when closed by their respective relays **142, 144** and **148**, serve to energize selected functions in the automobile starter system. The gas relay switch **150** is operative to energize actuating solenoid **14** to depress the accelerator linkage of the auto and supply fuel to the engine combustion chambers in a known manner. The starter relay switch **152** is operative to energize a starter motor, indicated schematically at **156**, while the ignition relay switch **154** is operative to energize a conventional ignition circuit of the automobile, indicated at **158**.

As noted above, with the on-off button **20** of the transceiver unit **10** depressed, depression of the check range pushbutton **22** establishes a radio output signal comprising the RF of the piezoelectric crystal **88** amplitude modulated by the audiofrequencies of tone generators **98** and **100**. Tone generators **98** and **100** may be termed the gas tone generator and the start tone generator, respectively. The radio signal based upon modulation of the RF carrier by the audio frequencies of the tone generators **98** and **100**, may be termed a first or check range signal from the transceiver **10**. Correspondingly, the radio output signal of the transceiver as established by depression of the start pushbutton **24** is termed a second or start signal and comprises the RF frequency of the piezoelectric crystal **88** as amplitude modulated by the combined audiofrequencies of tone generators **96** and **100**. Similarly, the radio output signal established by depressing the gas pushbutton **26** may be termed the third or gas signal from the transceiver and comprises the RF frequency of the piezoelectric crystal **88** amplitude modulated by the combined audiofrequencies of tone generators **96** and **98**.

The integrater circuits **128, 130** and **132** serve to decode the signals transmitted to the receiver-transmitter **12** such that the input signals to the gas relay driver **134**, the start relay driver **136** and the ignition relay driver **138** correspond to the frequency signals of the gas tone generator **98**, the start tone generator **100** and the ignition tone generator **96**, respectively.

The output signals from the gas relay driver **134** and the start relay driver **136** are also fed to an AND gate circuit **160**. The output signal of the AND gate circuit **160** is fed to a check range ON circuit **162**. Energizing the check range ON circuit **162** effects switching of the relay switches **113** and **124** through a receiver-transmitter relay **164** and a suitable switch linkage **163** to convert the receiver-transmitter **12** to a transmitting state. The latter state is established through switching the receiver **112** out of the receiver-transmitter circuit while switching a conventional crystal controlled transistor oscillator transmitter **172** into the receiver-transmitter circuit. The check range ON circuit **162** is connected to the relay **164**, a check range timer circuit **166** and a check range tone generator **168**. Upon being energized, the check range tone generator **168** serves to establish an output signal which is fed to the audio amplifier **122**. The output signal of the amplifier **122** then amplitude modulates the transmitter **172**.

When the automobile engine is started through closing the start relay switch **152** and the ignition relay switch **154**, the coil of the automobile distributor, indicated at **174**, and associated distributor establish ignition pulses in a known manner. The ignition pulses are fed to an ignition pulse detector **176** and also to the output of the audio amplifier **122** through a suitable conductor **178**. The signal transmitted to the output of the audio amplifier **122** through the conductor **178** is thereafter applied to the transmitter **172** to create a pulsating tone signal which is transmitted to the transceiver **10** during running of the automobile engine. The ignition pulse detector **176** detects the pulses from the ignition pulse coil **174** and feeds a signal to an ignition lock-in circuit **180** which, in turn, is connected to an AND circuit **182**. The AND circuit **182** is connected through the OR circuit **170** to the receiver-transmitter relay **164** and serves to lock the relay in a position wherein the relay switches **113** and **124** maintain the receiver-transmitter **14** in its transmitting state when the engine is initially running. The receiver-transmitter **12** is thus converted from a receiving state to a transmitting state whenever signals are supplied to the AND circuit **182** from both the lock-in circuit **180** and the interlock circuit **190** or when the check range ON circuit **162** receives a signal from the AND gate circuit **160**.

The AND circuit **182** is also connected to an engine-run timer **184**, the output of which is fed to an ignition shut-off circuit **186**. As will be more fully described hereinbelow, the engine-run timer **184** is adapted to establish an initial running period for the auto engine upon initial starting thereof and, after the predetermined running period, serves to open the ignition circuit of the automobile and thereby stop the engine.

The receiver-transmitter circuit also includes means to terminate engine running during the above-noted initial running period when one of the doors of the auto is opened. Such means includes door switch means, indicated at **188**, associated with the conventional door-controlled interior light switches such that upon opening one of the doors, a door switch interlock circuit **190** is energized. As will be more fully described hereinafter, the door switch interlock circuit **190** may take either of two alternative embodiments, each embodiment being adapted for use with one of the two known types of conventional automobile door switches. The door switch interlock circuit **190** is connected to the AND circuit **182** which, as noted above, is connected both to the OR circuit **170** and the engine-run timer **184**. The AND circuit **182** is such that it is electrically operatively associated with the OR circuit **170** and the engine-run timer circuit **184** only when it receives proper signals both from the ignition lock-in circuit **180** and the door switch interlock circuit **190**. In this manner, the doors of the automobile must be closed upon initial starting of the automobile engine and remain closed during the initial running period in order to maintain a proper signal from the interlock circuit **190** to the AND circuit **182**. If a door of the automobile is opened during the initial running period, the signal to the AND circuit **182** will be terminated, thereby stopping the automobile engine.

Detailed Description of Selected Receiver-Transmitter Circuitry

FIGS. **4** and **5** illustrate in detail selected circuitry portions of the receiver-transmitter circuit generally described above with respect to FIG. **3**. It will be understood that while the receiver-transmitter **14** is described below in conjunction with a 12-volt DC source, the circuit elements may be readily adapted for use with a 6-volt DC source.

FIG. **4** illustrates the circuitry for the gas relay driver **134**, the start relay driver **136**, the ignition relay driver **138**, the

enabling circuit **140** and the AND gate circuit **160**. The circuits for each of the gas, start and ignition relay drivers **134**, **136**, **138**, respectively, are substantially identical. The ignition relay driver **138** includes first, second and third transistors **200**, **202**, and **204** connected such that the base element of transistor **204** is connected through a resistor **206** to the emitter element of transistor **202**, the base element of transistor **202** is connected to the emitter element of transistor **200**, and the base element of transistor **200** is connected to its corresponding conventional integrator circuit **132** through a suitable conductor **208**. The collector elements of transistors **200**, **202** and **204** are connected to the auto DC voltage source, conventionally a 12-volt DC battery, through a conductor **210**. The emitter of transistor **202** is connected through a resistor **212** to a ground connection **214**, which ground connection is also connected to the emitter of the transistor **204**. A relay coil **216**, comprising the coil for the ignition relay **148**, is connected in series with the conductor **210** and is adapted to actuate the relay switch **154** upon being energized as will be more fully described hereinbelow. The relay switch **154** serves to energize the ignition circuit of the auto, connecting it to the 12-volt DC auto voltage source.

As noted, the circuits for the gas relay driver **134** and the start relay driver **136** are generally similar to the ignition relay driver circuit **138**. Each of the relay driver circuits **134**, **136** comprises three transistors connected in similar fashion to the transistors **200**, **202** and **204** of the ignition relay driver circuit **138**. A first transistor **218** of the gas relay driver circuit **134** has its base element connected through a conductor **220** to its corresponding conventional intergrator circuit **128**. Similarly, the base element of a first transistor **222** of the start relay driver circuit **136** is connected through a conductor **224** to its corresponding conventional integrator circuit **130**. The gas relay driver circuit **134** and start relay driver circuit **136** include second transistors **226** and **228**, respectively, which have their collector elements connected to the 12-volt DC voltage source of the automobile through conductors **230** and **232**, respectively. The emitter elements of transistors **226** and **228** are connected through resistors **231** and **233**, respectively, to ground. The emitter elements of transistors **226** and **228** are also connected through diodes **234** and **236**, respectively, to a conductor **238**. The conductor **238** connects the parallel connected diodes **234** and **236** to a conductor **284** (FIG. 5) through a resistor **239**, the conductor **284** being connected to a 12-volt DC voltage source. The diodes **234**, **236** and the resistor **239** comprise the above-noted AND circuit **160**.

The gas relay and start relay driver circuits **134** and **136**, respectively, include third transistors **240** and **242**, respectively, having their base elements connected through resistors **206** to the emitter elements of the associated transistors **226** and **228**. The emitter elements of the transistors **240** and **242** are connected through a suitable conductor **244** to the collector elements of a pair of transistors **246** and **248** which comprise the enabling circuit **140**. The emitter of the transistor **246** is connected to the base element of the transistor **248**, while the emitter element of the transistor **248** is connected to ground. The base element of the transistor **246** is connected through a resistor **250** through the emitter element of the transistor **202** of the ignition relay driver circuit **138**. A relay coil **252** comprising the coil for the gas relay **142** is connected in circuit with the conductor **230** between the 12-volt DC voltage source and the collector of the transistor **240**. The coil **252** is associated with the relay switch **150** in a conventional manner to effect closing of the relay switch **150** and connect the 12-volt DC voltage source of the auto to a suitable conductor **254**, which in turn is connected to the actuating solenoid **14** as will be more fully described hereinbelow.

In similar fashion, a relay coil **256** is connected to the conductor **232** between the 12-volt DC source and the collector of the transistor **242** of the start relay driver circuit **136**. The relay coil **256** comprises the energizing coil for the start relay **144** and serves to effect actuation of the starter relay switch **152** in a conventional manner. Closing of the start relay switch **152** connects the 12-volt DC voltage source of the auto to the conventional starting relay of the auto starter motor through a conductor **258**.

It can be seen that when a signal is applied to the base of the transistor **200** of the ignition relay driver circuit **138** from the corresponding integrator circuit **132** through conductor **208**, the transistors **202** and **204** will be caused to conduct, thereby connecting the 12-volt DC source to ground **214** through conductor **210** and ignition relay coil **216**, and closing the ignition relay switch **154**. It is known in starting an automobile engine that the ignition switch must be closed simultaneously with energizing the starter motor. Accordingly, when the second or start signal is transmitted from the transceiver **10** to the receiver-transmitter **12**, the modulating audio frequencies of the tone generators **96** and **100** are separated from the signal through the decoding circuit **126** such that appropriate signals are applied through the integrator circuits **130** and **132** to the base elements of the transistors **200** and **222**. To energize the starter relay coil **256** of the start relay driver **136**, the emitter of transistor **242** is connected to ground through transistor **248** of the enabling circuit **140**. Transistor **248** is turned on by the transistor **246** which in turn is turned on by receiving a signal from the emitter of transistor **202** of the ignition relay driver circuit **138** as above described.

In similar fashion, a third or start signal transmitted by the transceiver **10** to the receiver-transformer **14** effects energizing of the ignition relay driver circuit **138** and the gas relay driver circuit **134**. The circuit through the gas relay coil **252** is completed to ground through the enabling circuit **140** in similar fashion to the grounding of the emitter of the transistor **242** of the start relay driver circuit **136**.

To maintain the ignition relay switch **154** in closed position and thereby maintain the auto engine in a running condition after initial starting, the conductor **210** from the 12-volt DC source through the ignition coil **216** is adapted to be connected to ground through a conductor **260** and the AND circuit **182**. Referring to FIG. 5, the conductor **260** is connected to the OR circuit **146** which comprises a diode **262**. The diode **262** is also connected to the collector element of a transistor **264** which, in combination with a second transistor **266**, comprises the AND circuit **182**. The emitter element of the transistor **264** is connected to the collector element of the transistor **266**, and the emitter element of the transistor **266** is connected to a ground connection **308** through a conductor **268**.

The transistors **264** and **266** of the AND circuit **182** are turned on to lock the relay coil **216** in an energized state as follows. When the auto engine is initially started, a series of pulses are established in the coil of the distributor **174** (FIG. 3) in a known manner. The pulses from the distributor coil are fed to the ignition pulse detector **176** through a conductor **270** and a capacitor **272**. The ignition pulse detector circuit **176** comprises diodes **274**, **276** and **278** which are connected in a manner to control the amplitude of the signal received from the ignition coil **174**. The diodes of the ignition pulse detector circuit **176** are preferably selected and connected to limit the pulse amplitude signals passed through the ignition pulse detector to 12 volts, thereby establishing an average voltage output signal from the detector circuit which is generally consistent between different auto models having varying ignition pulse amplitudes.

The diode **276** is connected through a resistor **280** to the base of a transistor **282** of the ignition lock-in circuit **180**. The collector element of the transistor **282** is connected through a suitable conductor **284** to the 12-volt DC voltage source of the auto. The conductor **284** is adapted to be connected to ground through a capacitor **286** in a first path, and through a resistor **288** and a capacitor **290** in a second path. The emitter element of the transistor **282** is connected to a ground connection **292** through a resistor **294**. A capacitor **296** is connected in parallel with resistor **294** between the base element of transistor **282** and the ground connection **292**. When the ignition pulse detector **176** receives pulses from the distributor coil **174** at a

sufficiently high rate to turn on the transistor 282 of the ignition lockcin circuit 180, a signal from the emitter element of the transistor 282 is fed to the base element of the transistor 264 through a Zener diode 298 and a resistor 300. The Zener diode in this circuit provides a voltage threshold below which transistor 264 will not be activated. Such a threshold is required to prevent circuit activation by pulses occuring at a slow rate corresponding to normal cranking speeds of the automobile engine. It is only when the engine reaches running speeds that pulses occur at a sufficiently high rate to develop a DC level from the detector to exceed the Zener threshold voltage and consequently activate or energize the ignition lock-in circuit.

As noted above, known automobile door-controlled interior light switches are generally either of the type wherein opening the door connects the light circuit to ground, or the type wherein opening the door connects the light circuit to a voltage source. The door switch interlock circuit 190 adapts the receiver-transmitter 12 for use with either of these known types of door-controlled switches. The base element of the transistor 266 of the AND circuit 182 is connected to the collector element of a transistor 302 in the door switch interlock circuit 190, and to the 12-volt DC source of the auto through a pair of resistors 304 and 306. The resistors 304 and 306 are selected such that when the auto doors are closed, an appropriate bias voltage is applied to the base element of transistor 266 to turn it on. Turning on transistor 266 connects the diode 262 and conductor 260 to the ground connection 308 through conductors 268 and 310, thereby completing a hold-in circuit through the ignition relay coil 216 during the initial running period of the engine. The emitter of the transistor 302 is connected to the ground connection 308 through the conductor 310. The base element of the transistor 302 is connected through a resistor 312 to one or more door switches 188 of the type which, when closed, connect the base element to the 12-volt DC source. Closing a door switch 188 of the latter described type through opening the associated door turns on the transistor 302 thereby connecting the base element of transistor 266 to ground and turning transistor 266 off. This disconnects the conductor 260 from ground and opens the hold-in circuit to deenergize the ignition relay coil 216 after having once been energized during initial engine starting.

When using the receiver-transmitter 12 with an auto having door-controlled interior light switches which, upon closing when the associated doors are opened, connect the interior light circuit directly to ground to complete the circuit through the light, alternative interlock circuitry 190 is utilized. For the latter type of door-controlled light switch, a conductor 314 is connected between such last-mentioned door switch and the junction of resistors 304 and 306. Closing the last described type door-controlled light switch through opening the associated door connects the base element of transistor 266 directly to ground, thereby removing the bias voltage from the base element of transistor 266 and turning it off. As noted, turning off transistor 266 opens the hold-in circuit through ignition relay coil 216. Thus, the effect of closing either the first-described type door-controlled light switch or the last-described door-controlled light switch serves to connect the base element of the transistor 266 to ground and turn the transistor off, thereby opening the hold-in circuit through relay coil 216.

The circuitry of the receiver-transmitter 14 includes engine run timer circuit means 184 to limit the initial running period of the engine upon starting thereof. Such a time period limitation on initial running of the engine is desirable to prevent continued running of the engine should the operator or driver fail to drive the car within a reasonable period after starting it. Noting FIG. 5, the engine run timer circuit 184 includes a transistor 320 and a unijunction 322. The base element of the transistor 320 is connected through resistors 328, 330, 288 and conductor 284 to the 12-volt DC source, and through a capacitor 326 and a conductor 336 to the collector element of transistor 264 in the AND circuit 182. A selectively operable switch means 332 is connected across the resistor 328 between the base element of transistor 320 and the resistor 330. The switch means 332 is suitably connected to the time control switch 44 on the casing 30 of the receiver-transmitter 12 (FIG. 1) and provides a means for selectively shorting across the resistor 328 to vary the time relation of turning on or firing of transistor 320. The collector element of transistor 320 is connected to the 12-volt DC source through resistor 288 and conductor 284.

The unijunction 322 includes an emitter element 324 connected common with the emitter element of transistor 320 to the 12-volt DC source through resistor 288, a first base element connected through a resistor 333 and resistor 288 to the 12-volt DC source, and a second base element connected (a) through resistors 335, 337 and conductor 336 to the collector element of transistor 264 in the AND circuit 182, (b) through resistor 335, a conductor 338 and a capacitor 340 to the ground 308, and (c) through a capacitor 342 to the gate of a gate-controlled rectifier 344 comprising the ignition shut-off circuit 186.

With the engine run timer circuit 184 associated with the ignition shut-off circuit 186 as above described, turning on transistor 320 will effect firing of the unijunction 322 to turn on the SCR 344. Turning on SCR 344 shorts the output signals from the ignition pulse detector circuit 176 to the ground connection 292, thereby turning off the transistor 282 of the ignition lock-in circuit 180. Turning off transistor 282 correspondingly turns off transistors 264 and 266 of the AND circuit 182 and effects opening of the above-described hold-in circuit through the ignition relay coil 216 to open the ignition relay switch 154, thereby stopping the auto engine. The switch 332 associated with the selector time switch 44 on the receiver-transmitter casing 30 provides a means for varying the duration of initial engine running after starting the engine.

As noted above, when the check range pushbutton 22 on the transreceiver 10 is depressed, a check range signal comprised of the RF frequency of the piezoelectric element 88 modulated by the audio frequencies of the gas tone generator 98 and start tone generator 100 is transmitted to the receiver-transmitter 14. If the receiver-transmitter 14 is within range of the signals so transmitted, the receiver-transmitter will be converted to a transmitting state and transmit a signal to the transreceiver 10 which establishes a continuous tone output from the speaker 86 indicating to the operator that the auto is within range for remote starting thereof. The receiver-transmitter circuit means for producing such a check range tone for a predetermined time period includes the check range ON circuit 162, the check range timer circuit 166, and the check range tone generator circuit 168.

As was explained above with respect to the block diagram of FIG. 3, the receiver-transmitter relay 164 is coupled to the relay switches 113 and 124 such that when the receiver-transmitter 14 is in its normal state, the receiver-transmitter acts as a receiver, the transmitter 172 being inoperative. In such normal receiving state, the relay coil of the receiver-transmitter relay 164 is connected between the auto 12-volt DC source and a receiver on-off switch circuit, indicated at 360. The receiver on-off switch circuit 360 includes a transistor 358 having its base element connected to the negative terminal of the relay coil 164 through a conductor 362 and a resistor 364. The collector element 366 of the transistor 358 is connected to the ground reference of the IF amplifier 118 of the receiver 112, while the emitter element of the transistor is connected to a circuit ground connection. A resistor 365 is connected across the base and emitter elements of the transistor 358. The resistor 364 is selected such that when the receiver-transmitter 14 is in its normal receiving state, a relatively low current will flow through the relay coil 164.

The above-referenced check range ON circuit 166 is operative to control switching of switch relays 113 and 124, and includes a silicon controlled rectifier 350 having its gate element connected to the AND gate circuit 160 through a resistor 352

and the conductor **238**. A resistor **354** and a capacitor **356** are connected in parallel between the gate of SCR **350** and the ground connection **308** to which the cathode of the SCR is also connected. The anode of SCR **350** is connected to the negative terminal of the receiver-transmitter relay **164** through a conductor **357**.

When a check range signal is transmitted to the receiver-transmitter **14**, a signal is established by the AND gate circuit **160** through the conductor **238** to turn on the SCR **350**. Turning on the SCR **350** connects the negative terminal of the receiver-transmitter relay **164** and the conductor **362** to the ground connection **308**, thereby reducing the bias voltage applied to the base element of transistor **358** to turn the transistor off, and establishing a relatively high current flow through the relay coil. The high current flow through the relay coil **164** and conductor **357** serves as a holding current to maintain SCR **350** turned on, and is effective to actuate the relay switches **113** and **124**, moving them from the positions shown in solid lines in FIG. 3 to the positions shown in dash lines whereby the receiver **112** is disconnected from the receiver-transmitter circuit, while the transmitter circuit **172** is connected therein.

The check range tone generator **168** includes a unijunction **370** having a base-two element connected to the 12-volt DC source through resistors **372**, **288** and conductor **284**. The unijunction **270** has a base-one element connected through a resistor **374** to the conductor **357**. The emitter element of unijunction **370** is connected to the junction of a resistor **376** and a capacitor **378** which are connected in series between the conductors **284** and **357**. The check range tone generator further includes a transistor **380** having its base element connected to the emitter of the unijunction **370**, its collector element connected to the 12-volt DC source through resistor **288** and conductor **284**, and its emitter element connected through a resistor **382** to conductor **357**. The output of the emitter element of the transistor **380** is further connected through a coupling capacitor **384**, a conductor **386** and the relay switch **124** to the audio amplifier **122**. An integrating capacitor **388** is connected between the emitter element of transistor **380** and conductor **357** and serves to smooth the output voltage of transistor **380** when in a conducting state.

When the SCR **350** is turned on through applying a signal to its gate from the AND circuit **160**, a voltage difference is established across the unijunction **370** and transistor **380** of the check range tone generator circuit **168** causing unijunction **370**, capacitor **378** and resistor **376** to function as a relaxation oscillator in a known manner. Transistor **380** serves as an emitter follower in a known manner to apply a signal to the audio amplifier **122** when the receiver-transmitter **14** is in a transmitting state.

The check range timer circuit **166** serves to control the duration of the signal produced by the tone generator circuit **168**, and comprises a unijunction **390** having base-two element connected to the 12-volt DC source through a resistor **392**, resistor **288** and conductor **284**. Unijunction **390** has a base-one element connected to conductor **357** through a resistor **394**. The emitter element of the unijunction **390** is connected to the junction of a resistor **396** and a capacitor **398** which are connected in series between conductors **284** and **357**. The base-one element of the unijunction **390** is connected to the base element of the transistor **400** through a conductor **402** and a capacitor **404**. The collector element of transistor **400** is connected to conductor **357**, and the emitter element of the transistor is connected to the ground connection **308**. A resistor **406** is connected between the base and emitter elements of transistor **400**.

Turning on the SCR **350** as above described, effects a voltage difference across the unijunction **390**, resistor **396**, and capacitor **398**, causing a slowly increasing voltage to appear across capacitor **398**. The capacitor **398** and resistor **396** are preferably selected such that the capacitor will require a predetermined time period, such as 5 sec., after turning on the SCR **350** to build to the peak point emitter voltage of the unijunction transistor **390**. When this voltage is reached the capacitor **398** discharges through the unijunction **390**, a signal is applied to the base of the transistor **400**, thereby turning it on. Turning on the transistor **400** connects the conductor **357** to ground and removes the holding current from the SCR **350** to thereby return the SCR to its blocking state. Upon discharge of the capacitor **398** across the resistor **394**, the signal to the base element of transistor **400** goes to zero, whereby transistor **400** is turned off. With SCR **350** and transistor **400** turned off, the conductor **357** is no longer directly connected to the ground connection **308**, thereby eliminating the voltage differential across the check range tone generator circuit **168** and the check range timer circuit **166** necessary to effect operation thereof. Simultaneously, the necessary bias voltage is again applied to the base element of transistor **358** of the receiver on-off circuit **360** to turn the transistor on and effect switching of relay switches **113** and **124** to the positions shown in solid lines in FIG. 3, thereby reestablishing the receiver-transmitter as a receiver.

As noted above, when the auto engine is initially started and produces pulses from the ignition coil, such pulses are connected to the output of the audio amplifier **122** through a suitable conductor **178**. When the pulses from the ignition coil reach an average value sufficient to turn transistor **264** on, and transistor **266** of the AND circuit **182** is on because the auto doors are closed, then the conductor **357** is connected to ground **308** through the diode **375** comprising the OR circuit **170**, conductor **336**, the AND circuit **182** and conductors **268** and **310**. Connecting conductor **357** to ground **308** through the AND circuit **182** serves to turn off the transistor **358** of the receiver on-off circuit **360** in a manner similar to when turning on SCR **350**, thereby converting the receiver-transmitter **14** from a receiving to a transmitting state. Simultaneously, the check range tone generator circuit is again made operative and establishes an output signal to the audio amplifier **122**. The output if the audio amplifier is also modulated by the pulses from the ignition coil to provide a signal through the transmitter **172** to the transceiver **10** which produces a pulsating tone from the speaker **86** indicating that the auto engine is running.

Turning off the transistors **264** and **266** of the AND circuit **182** by means of the engine run timer circuit **184** or opening one of the car doors as above described, disconnects the conductor **357** from ground, thereby effecting a reversion of the receiver-transmitter **14** to a receiving state simultaneously with stopping the auto engine.

Referring now to FIGS. 6 and 7, the base portion **46** of the actuating solenoid **14** includes a plurality of apertures **410** therein through which suitable fastening means may be inserted to secure the base portion to the floor panel **50**. The base portion **46** is made from a suitable nonmagnetic material, such as plastic, and includes an upstanding coil winding support portion **412** disposed generally centrally to the mounting apertures **410**. The coil winding support portion **412** has a generally cylindrical outer peripheral surface disposed between a lower annular shoulder **414** and an upper annular flange **416** formed normal to and preferably integral with the upstanding support portion **412**. The annular shoulder **414** is axially upwardly spaced from a planar surface **418** on the base **46**. An annular cylindrical wall **420** is disposed between the annular shoulder **414** and the planar surface **418** of the base **46**.

The outer peripheral surface of annular flange **416** has a diameter equal to the diameter of the outer peripheral surface of the annular wall **420** such that the upper flange **416** and annular wall **420** provide a generally cylindrical guide means to receive a sleeve member **422** thereon. The sleeve member **422** has an annular wall defining an inner cylindrical surface having a diameter slightly greater than the diameter of the annular wall **420** so as to be readily received thereover. The sleeve member **422** has a longitudinal length substantially equal to the distance between the upper planar surface **418** of base member **46** and the upper surface of the annular flange **416**.

Sleeve member **422** is made of a ferromagnetic material, such as iron, having high magnetic permeability. One or more set screws **424** are disposed in radial relation through suitable threaded apertures in the lower portion of the sleeve member **422** for affixing it to the base **46** of the actuating solenoid.

The coil winding support portion **412** of the solenoid base **46** has a coil winding **426** disposed thereon between the shoulder **414** and annular flange **416**. The coil winding comprises a plurality of turns of a suitable conductor **428**, the end portions of the winding being received through appropriate apertures in the shoulder **14** and base **46** of the solenoid and adapted for connection to an electric power source such as the above-described conductor **254**, as through conductors **58** (FIG. **1**). The conductor **428** is suitably insulated to prevent shorting between convolutions of the coiled conductor winding.

The coil winding support portion **412** of the solenoid base portion **46** has a cylindrical central core receiving bore **430** extending downwardly therein which serves to receive a first ferromagnetic means comprising a cylindrical ferromagnetic core **432**. The core **432** is suitably supported by the cap member **48** in generally normal relation to an end surface **434** thereof, as through a screw **435**. The core **432** has a longitudinal length slightly less than the depth of the recess **430** in the winding support portion **412** of base portion **46**, and has an outer diameter slightly less than the diameter of the recess **430** so as to allow ready axial movement of the core within the recess.

The upper movable cap member or portion **48** of the actuating solenoid **14** includes an annular wall **436** having an internal diametrical surface sufficient to allow the cap member to be received over the annular ferromagnetic sleeve member **422** for movement toward and away from the base **46**.

Second ferromagnetic means comprising an annular generally planar ferromagnetic plate **438** is retained against the undersurface of end **434** of the upper solenoid cap member **48** by the upper end surface of the cylindrical core **432** and the screw **436**. The planar ferromagnetic plate **438** is disposed in normal relation to the core **432** and has an outer peripheral surface of a diameter sufficient to be received within the annular wall portion **436**. The longitudinal length of the annular wall **436** is such that upon movement of the upper portion **48** of the actuating solenoid toward the base **46**, the annular plate **438** will engage the upper edge surface of the sleeve member **422** to thereby limit downward movement of the upper cap member **48** of the solenoid.

As noted above, the upper portion **48** of the actuating solenoid **14** serves to support an L-shaped actuating rod **56**. The L-shaped actuating rod is secured within a suitable bore of an extending arm **440** formed integral with or otherwise suitably secured to the outer peripheral surface of the annular wall **436** generally adjacent the upper end surface **434** thereof. The L-shaped actuating rod **56** is adjustable relative to the arm **440** and can be retained in a selected position therein through suitable set screws **442**.

The actuating solenoid **14** includes means for preventing rotational movement of the upper cap portion **48** relative to the base portion **46** during actuation thereof. Such means includes a guide shaft **444** which is threadedly secured to the base portion **46** normal to the planar surface **418** thereof as through a threaded end portion received within an appropriate threaded aperture, and a lock nut **446**. The guide shaft **444** extends through a bore **448** in a generally radially projecting arm portion **450** formed integral with or otherwise suitably secured to the annular wall **436** of the upper cap portion **48** generally adjacent the lower end thereof. The guide shaft **444** includes an upper head portion **452** which limits upward movement of the upper cap portion **48** of the actuating solenoid relative to the base portion **46**. A coil compression spring **454** is disposed about the guide shaft **444** between the lock nut **446** and a lower surface of the extending arm portion **450** and provides means to urge the upper cap portion **48** upwardly away from the base **46**.

It has been found desirable to provide an axial stroke of 1¾ inches for the upper cap portion **48** of the actuating solenoid **14** to insure proper actuation of the accelerator linkage member **52** described above with respect to FIG. **1**. Such desired stroke may be readily obtained through proper selection of the length of the guide shaft **444** and the longitudinal lengths of the sleeve member **422** and the annular wall **436** of the upper cap portion **48**, it being desirable that the head **452** of the guide shaft **444** serve as the limit in upward travel, while downward travel be limited through engagement of the plate **438** against the upper edge surface of the sleeve member **422**.

In operation, an appropriate voltage signal is applied to the coil winding **426** through the conductor **428** such that the applied current establishes a magnetic field about the coil winding in a known manner. The magnetic field about the coil winding **426** exerts a force on the first ferromagnetic core means **432** in a direction to move the cap member **48** downwardly toward the base **46**. The ferromagnetic sleeve **422** is disposed about the coil winding **426** such that a magnetic field will be induced about the sleeve from the magnetic field established about the coil winding from the applied current. The magnetic field induced in the ferromagnetic sleeve member **422** is such that a field gradient is established adjacent the upper end surface thereof in a known manner. As the cap member **48** and core **432** are pulled downwardly toward the base **46** due to the force exerted thereon from the magnetic field of coil winding **426** as above described, the second ferromagnetic means comprising the annular ferromagnetic plate **438** enters the magnetic field gradient established in the sleeve **422** by the induced magnetic field thereabout, which field thereupon exerts a further force on the cap member **48** in a direction to move it downwardly toward base **46**. The conductor **428** is selected such that upon connection thereof in circuit with the above-described conductor **254** of the gas relay switch **150**, applying the auto 12-volt DC source to the conductor will establish a downward force of 24 pounds as the upper cap member **48** of the actuating solenoid is pulled downwardly by magnetic forces exerted upon core **432** and plate **438**.

Having thus described the actuating solenoid **14**, it can be seen that when the solenoid is installed on the floor panel **50** as described above with respect to FIG. **1**, a current applied to the conductor **426** upon depressing the gas button **26** on the transceiver **10** will effect downward movement of the upper cap portion **48** of the solenoid to thereby depress the accelerator linkage **52** through the L-shaped rod **56**.

While the above-described remote control system comprising the transceiver **10** and the receiver-transmitter **14** has been illustrated with the transceiver being adapted to transmit a check range signal, a start signal, and a gas signal to effect selected functions through the receiver-transmitter, the present invention contemplates that other functions may be readily performed by the receiver-transmitter upon the sending of selected signals from the transceiver. For example, the transceiver **10** can be adapted to transmit additional signals through the addition of tone generators, with various combinations of the tone generator frequencies being used to modulate the RF signal of the transmitter **72**. Correspondingly, the receiver-transmitter **14** can be readily modified such that upon receipt of a selected signal from the transceiver **10**, a function other than those above-described is performed. More specifically, additional relay switches, such as the above-described relay switches **150**, **152** and **154**, could be added to the receiver-transmitter **14** such that upon receipt of a selected signal from the transceiver, an automobile air conditioner or heater is turned on. In addition, it is contemplated that the receiver-transmitter could be readily modified to actuate a convertible top operating motor such that upon receipt of a selected signal, the convertible top will be lowered or raised.

Thus, while preferred embodiments of our invention have been shown and described, it will be obvious to those skilled in the art that changes and modifications may be made therein

without departing from the invention in its broader aspects and, therefore, the appended claims are intended to cover all such changes and modifications as fall within the true spirit and scope of our invention.

We claim:

1. A system for remotely starting an engine of an automobile having doors, an ignition circuit, an electric starter motor, and lever means for selectively effecting the flow of fuel to the automobile engine, comprising, in combination, a transceiver adapted to transmit a plurality of radio signals, said transceiver including circuit means adapted to produce a plurality of audio frequency signals and modulate an RF signal with selected ones of said audio frequency signals to establish said radio signals, and receiver-transmitter means including circuit means adapted to effect energizing of the ignition circuit and the starter motor upon receipt of a selected signal from said transceiver to start the automobile engine, said transceiver being adapted to transmit a check range signal, and said receiver-transmitter circuit means being adapted to transmit a signal to said transceiver responsive to said check range signal indicating that the automobile is within range to remotely start the engine thereof.

2. A system as defined in claim 1 wherein said receiver-transmitter circuit means includes a timing circuit operative to limit the time duration of transmission of said signal responsive to said check range signal.

3. A system for remotely starting an engine of an automobile having doors, an ignition circuit, an electric starter motor, and lever means for selectively effecting the flow of fuel to the automobile engine, comprising, in combination, a transceiver adapted to transmit a plurality of radio signals established by modulation of an RF signal, said transceiver comprising a circuit means including a plurality of tone generator having tuning fork elements therein, said tone generators being adapted to produce a plurality of separate distinct audio modulating frequencies, said transceiver circuit further including switch means adapted to effect modulation of said RF signal by selected ones of said modulating frequencies, and receiver-transmitter means including circuit means adapted to effect energizing of the ignition circuit and the starter motor upon receipt of a selected signal from said transceiver to start the automobile engine.

4. A system for remotely starting an engine of an automobile having doors, an ignition circuit, an electric starter motor, and lever means for selectively effecting the flow of fuel to the automobile engine, comprising, in combination, a transceiver adapted to transmit a plurality of radio signals, said transceiver including circuit means adapted to produce a plurality of audio frequency signals and modulate an RF signal with selected ones of said audio frequency signals to establish said radio signals, and receiver-transmitter means including circuit means adapted to effect energizing of the ignition circuit and the starter motor upon receipt of a selected signal from said transceiver whereby to start the automobile engine, said receiver-transmitter circuit means including an engine-run timer circuit adapted to limit the duration of running of the engine after initial starting thereof.

5. A system for remotely starting an engine of an automobile having doors, an ignition circuit, an electric starter motor, and lever means for selectively effecting the flow of fuel to the automobile engine, comprising a transceiver adapted to transmit a plurality of radio signals, said transceiver including circuit means adapted to produce a plurality of audio frequency signals and modulate an RF signal with selected ones of said audio frequency signals to establish said radio signals, and receiver-transmitter means including circuit means adapted to effect energizing of the ignition circuit and the starter motor upon receipt of a selected signal from said transceiver whereby to start the automobile engine, said receiver-transmitter circuit means including a door switch interlock circuit associated with the doors of the auto, said interlock circuit being adapted to terminate running of the automobile engine after initial starting thereof upon opening of a door of the automobile.

6. A system for remotely starting an engine of an automobile having doors, an ignition circuit, an electric starter motor, and lever means for selectively effecting the flow of fuel to the automobile engine, comprising a transceiver adapted to transmit a plurality of radio signals, said transceiver including circuit means adapted to produce a plurality of audio frequency signals and modulate an RF signal with selected ones of said audio frequency signals to establish said radio signals, and receiver-transmitter means including circuit means adapted to effect energizing of the ignition circuit and the starter motor upon receipt of a selected signal from said transceiver whereby to start the automobile engine, said receiver-transmitter circuit including means to effect transmission of a pulsating tone signal to said transceiver upon starting of the engine by said selected signal.

7. A system for remotely starting an engine of an automobile having an ignition circuit, an electric starter motor, and lever means for selectively effecting the flow of fuel to the engine, comprising, in combination, a transceiver adapted to transmit a plurality of radio signals, receiver-transmitter means including circuit means adapted to effect energizing of the ignition circuit and the starter motor upon receipt of a selected signal from said transceiver to start the automobile engine, and an actuating solenoid operatively associated with said receiver-transmitter means and the fuel flow lever means, said actuating solenoid comprising a base having a coil winding support portion, said coil winding support portion having a core receiving bore therein, a coil winding disposed on said base winding support portion and adapted to establish a magnetic field thereabout, a ferromagnetic sleeve member disposed about said coil and adapted to have a magnetic field induced thereabout from the magnetic field established about said coil winding, a cap member received over said sleeve member for movement toward and away from said base, first ferromagnetic means supported by said cap member for axial movement within said core receiving bore such that the magnetic field about said coil exerts a force on said first ferromagnetic means in a direction to move said cap member toward said base, and second ferromagnetic means supported by said cap member in a manner such that said second ferromagnetic means enters the magnetic field induced in said sleeve member during movement of said cap member toward said base to exert a further force on said cap member in a direction to move said cap member toward said base, and means supported by said cap member for engagement with the fuel flow lever means, said receiver-transmitter means including circuit means adapted to effect energizing of said coil winding upon receipt of a selected signal from said transceiver to actuate the fuel flow lever means.

8. An actuating solenoid as defined in claim 7 wherein said means supported by said cap member for engagement with said lever means includes an actuating rod supported by said cap member for adjustment relative thereto.

9. An actuating solenoid as defined in claim 7 including means for preventing rotational movement of said cap member relative to said base.

10. An actuating solenoid as defined in claim 7 including means urging said cap member away from said base.

11. An actuating solenoid as defined in claim 7 wherein said first ferromagnetic means comprises a cylindrical ferromagnetic core having upper and lower end portions and being adapted to be received within said core receiving bore for axial movement therein.

12. An actuating solenoid as defined in claim 11 wherein said second ferromagnetic means comprises an annular planar ferromagnetic plate disposed in normal relation to said ferromagnetic core.

13. An actuating solenoid as defined in claim 12 wherein said cap member includes an annular wall portion adapted to be received over said sleeve member, and wherein said ferromagnetic plate is retained between the upper end of said cylindrical ferromagnetic core and said cap member.