May 31, 1938. F. R. MARCEL 2,118,850

HAIRCUTTING MEANS

Original Filed March 6, 1935 2 Sheets-Sheet 1

Fig. 1.

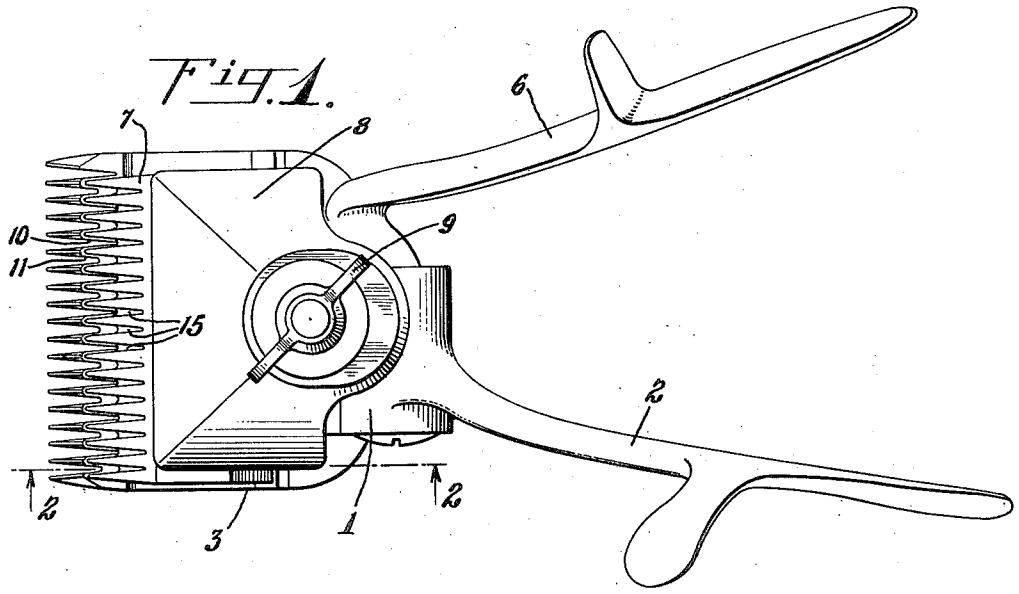

Fig. 2.

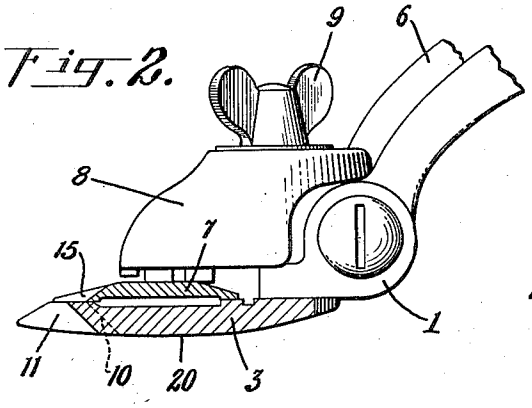

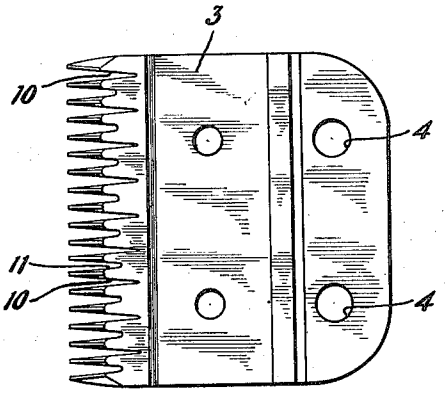

Fig. 3.

Fig. 5.

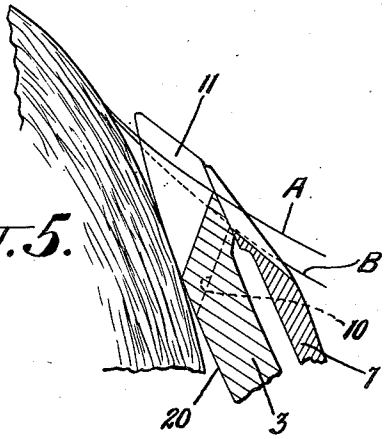

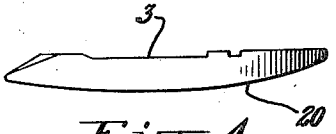

Fig. 4.

INVENTOR

F. R. Marcel

BY

Morgan, Finnegan & Durham

ATTORNEYS

May 31, 1938. F. R. MARCEL 2,118,850

HAIRCUTTING MEANS

Original Filed March 6, 1935 2 Sheets-Sheet 2

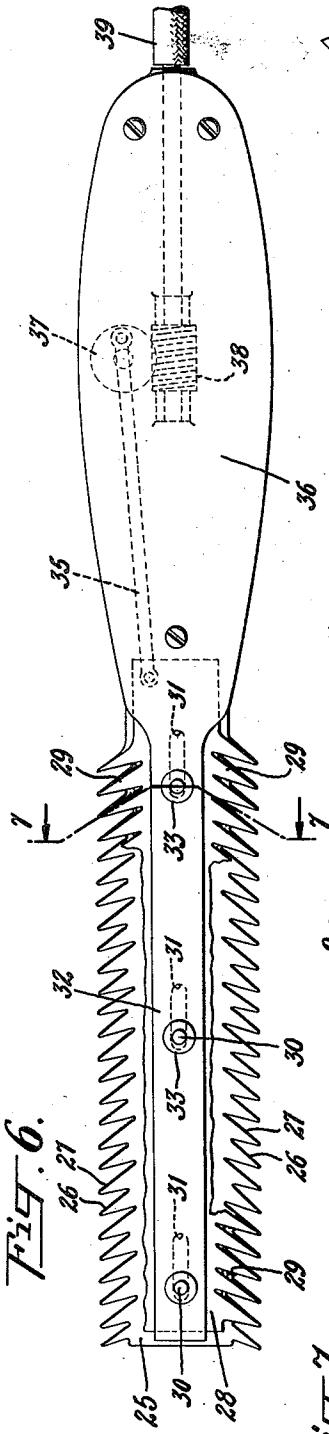

Fig. 6.

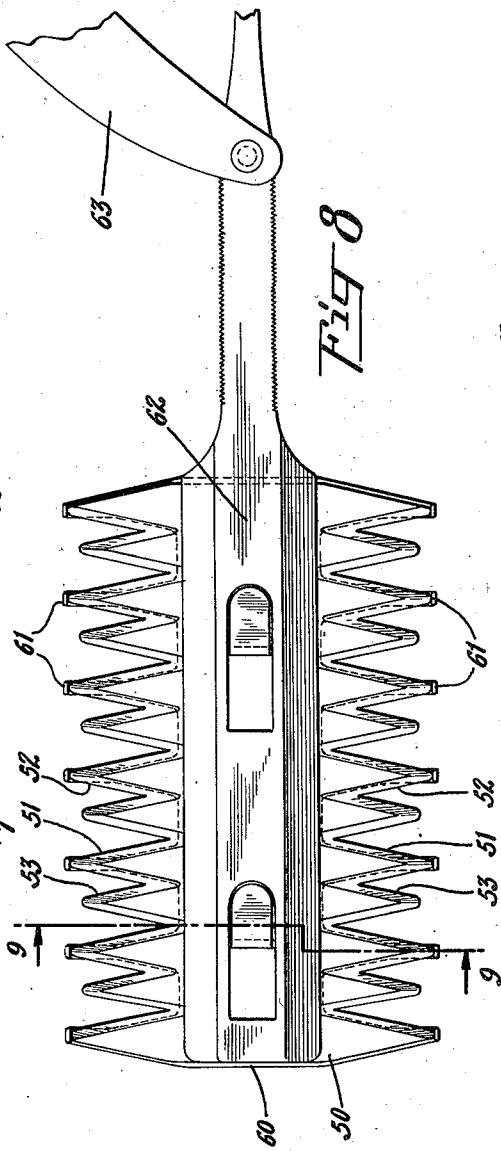

Fig. 8

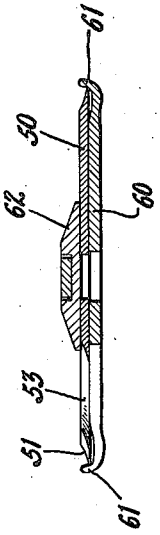

Fig. 9.

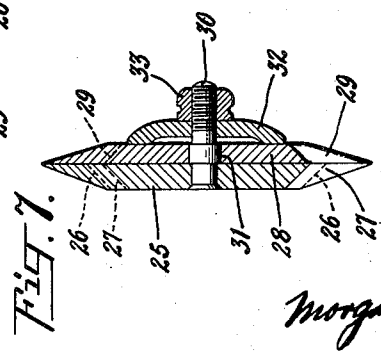

Fig. 7.

INVENTOR
F. R. Marcel
BY
Morgan, Finnegan & Durham
ATTORNEY

Patented May 31, 1938 2,118,850

UNITED STATES PATENT OFFICE

2,118,850

HAIRCUTTING MEANS

François René Marcel, Brooklyn, N. Y.

Application March 6, 1935, Serial No. 9,535
Renewed October 23, 1937

2 Claims. (Cl. 30—200)

The invention relates to novel and useful means for cutting hair, and especially to improvements in hair cutting and trimming devices used by barbers.

Objects and advantages of the invention will be set forth in part hereinafter and in part will be obvious herefrom, or may be learned by practice with the invention, the same being realized and attained by means of the instrumentalities and combinations pointed out in the appended claims.

The invention consists in the novel parts, constructions, arrangements, combinations and improvements herein shown and described.

The accompanying drawings, referred to herein and constituting a part hereof, illustrate one embodiment of the invention, and together with the description, serve to explain the principles of the invention.

Of the drawings:

Fig. 1 is a top plan view of hair-cutting clippers embodying the invention;

Fig. 2 is a fragmentary section taken on line 2—2 of Fig. 1;

Fig. 3 is a top plan of the fixed blade and cutting teeth of the clippers shown in Fig. 1;

Fig. 4 is an end elevation of the blade shown in Fig. 3;

Fig. 5 is an enlarged fragmentary section of the clippers in operation on a head of hair;

Fig. 6 is a top plan of a modified form of clippers embodying the invention;

Fig. 7 is a section on line 7—7 of Fig. 6;

Fig. 8 is a fragmentary plan of a safety razor embodying a modified form of the invention; and

Fig. 9 is a section on line 9—9 of Fig. 8.

The invention is directed to providing new and useful improvements in means for cutting hair. A primary object of the invention is to provide hair cutting means which will substantially automatically produce a natural-appearing line or finish on hair cut on the human head, that is, without leaving a straight line or other unnatural appearance in the barbered hair. The invention permits the barber to produce a natural hair line or finish without requiring the great skill and care heretofore necessary. In present practice, in order to leave the cut hair lying naturally against the head and the cut ends properly staggered or "shingled" so that they approximately simulate the appearance of natural growth, it has been necessary to very carefully vary the length of the cut hairs with scissors. If it is attempted to obtain this "shingle" effect with ordinary barbers' clippers or even with a razor or scissors by ordinary cutting operation, straight line cuts or other unnatural and irregular effects are produced.

The present invention is applicable to barbers' clippers, to hair-cutting razors, to shears and to other forms of hair-cutting mechanism. The invention primarily comprises a construction of cutting blades or cutting surfaces which automatically effect a shingling or virtually natural variation in the lengths of the hairs cut so that they will interlie on the head and present a finished natural appearance. By my invention this natural shingled appearance can be obtained substantially automatically through the use of clippers or a razor alone and without requiring great care and skill.

Broadly described, the novel construction of cutting blade embodying the invention (whether applied to clippers, razor, or shears) comprises a plurality of cutting surfaces arranged in staggered relation so that when the hairs are cut along a predetermined line on the head, the cut ends will automatically be staggered in length so that a straight line cut across the head at any position is avoided.

The invention is also directed to providing new and improved means for facilitating the convenience of operation of hair-cutting clippers or the like.

It will be understood that the foregoing general description and the following detailed description as well are exemplary and explanatory of the invention but are not restricted thereto.

Referring now in detail to the present preferred embodiment of the invention, illustrated by way of example in the accompanying drawings, a hair-cutting clipper of generally standard construction is shown in Figs. 1 and 2, comprising the fixed clipper frame 1 with the fixed handle arm 2. The lower or fixed blade plate 3 is suitably attached to the bottom of frame 1, as by the screw holes 4. The movable handle arm 6 is pivotally connected to the fixed frame in the usual manner and actuates the laterally-reciprocable upper blade member 7. The assembly may be held together by a conventional guard member 8, with the wing nut 9 which is threaded to the usual pivot stud.

In accordance with the invention, the cutting teeth of the fixed blade of the clipper differ from the conventional clipper teeth in that their cutting surfaces vary in length with respect to each other. For example, as shown in Fig. 3, the cutting surfaces of the clipper teeth alternate in length. Thus, every tooth has on one side a cut-

ting edge 10 of what might be termed the standard length or depth, while the opposite side of said tooth has a much shorter cutting edge 11. By alternating the lengths of said cutting edges 10 and 11 on opposite sides of each adjacent tooth, I provide the alternate notches of normal and short depths as shown in Figs. 1 and 3. The upper or movable cutting blade 7 of my clipper is preferably of the usual construction, all the notches or cutting edges 15 being of the same depth.

In operation, the hereinbefore described construction of cutting surfaces automatically produces cut hairs of alternately differing lengths. As indicated in Fig. 5, when the clipper is applied to hairs at any position on the head, two adjacent hairs falling into the cutting notches of the clipper blades will be supported at different angles from the surface of the head. That is, the hair A will fall into one of the shallow cutting notches 11 and will thus be supported and cut relatively short, while the hair B, falling into the adjacent deeper notch 10 will lie lower and when cut will be of greater length than hair A. Thus, as the barber pushes or moves the clipper upwardly and into the hair he will be continuously and automatically cutting alternate hairs of two different lengths at every clipper position. As hereinbefore stated, this action produces a much more natural appearance on the cut hair at any given clipper cut and avoids the appearance of a straight cross cut.

It will be understood that the invention is not limited to two or any certain number of lengths of cutting surfaces on the clipper blade or the like. For example, three or even more variations in the cutting lengths may be alternated across the face of the blade, but for convenience, I have shown in the drawings only the relatively simple form of double lengths shown in Fig. 3. Furthermore, the relative lengths of cut may be varied in different blades for fine or coarse hair, etc.

To facilitate the use of the hereinbefore described clipper construction, I also provide an improved form for the bottom or head contacting surface 20 of the fixed clipper blade 3. As shown, said bottom surface 20 is substantially arcuate in form so that the bottom of the clipper has a rolling contact with the surface of the head. This construction greatly facilitates the ease and accuracy of handling of a clipper because the barber can maintain a proper fulcrum against the head as he moves the clipper forwardly and upwardly, thus giving him certainty of control at all times. In clippers as now constructed, having substantially flat or irregularly shaped bottom surfaces, the fulcrum suddenly shifts from the forward edge to the rear edge of the bottom plate thus introducing an irregularity of movement and making for awkward and irregular cutting.

Referring to the mechanism shown in Fig. 6, the invention provides a modified form of clipper particularly adapted for trimming and nice hair cutting work. As shown, the clipper comprises a fixed blade 25 which is relatively long and narrow and is provided with cutting teeth along either side. Said cutting teeth preferably have cutting edges of alternate lengths 26 and 27 in accordance with the general principle hereinbefore described. A superimposed reciprocatory cutting blade 28 is provided with cooperating cutting teeth 29 of a standard length. The means for reciprocably mounting together the two blades may comprise the studs 30 which are fixed to the lower blade 25 and extend through slots 31 in the upper blade, being fixed to a binding frame member 32 by threaded connection with the lock nuts 33 at a plurality of points.

Means may be provided for mechanically reciprocating the upper blade 28 and as indicated comprise a crank 35 mounted within a hollow handle 36 which is attached to the fixed blade and frame member 32. Reciprocatory movement is imparted to the crank from the rotary gear wheel 37 which is rotated from the worm gear 38. Rotary motion may be imparted to the worm as by a flexible shaft 39 which leads into the hollow handle 36. It will be understood that the details of the mechanical driving mechanism constitute no essential part of my invention and are merely indicated generally in the foregoing description and in the drawings.

In accordance with one feature of the invention it will be noted that the cutting teeth on either side of the clipper shown in Fig. 6 extend outwardly at less than a right angle to the longitudinal axis of the clipper. This bias on the blades of the clipper facilitates rapid and easy cutting of the hair throughout the relatively long cutting stroke provided by the long and narrow clipper. In operation, the clipper is preferably used in conjunction with a comb, much in the manner that a pair of scissors is used with a comb in hair cutting. That is, the comb is run under the hair to raise and hold the separate tufts firm for the shearing action. By moving the clipper upwardly and laterally along the head and across the comb teeth, the angularly-disposed cutter teeth slide easily into the hair and force the tufts of hair against the sides of the comb teeth. This gives a firm shearing resistance to the cutting action between the comb teeth and the clipper blades. The efficacy of the biased clipper blades will be clear when it is seen that with the teeth extending at right angles, as in ordinary clipper construction, the use of the clipper with a comb is ineffectual at least for any relatively long sweeping cutting movement. That is, if such a clipper were moved parallel to the comb teeth there would be little or no shearing resistance, whereas in a lateral movement the perpendicular teeth would be blocked by their sides from moving into the hair. However, with the teeth at an angle, as shown, the hair is fed easily into the notches between the clipper teeth and at the same time encounters a firm shearing resistance from the comb teeth.

By having the teeth on either side of the clipper, the operator can work on either side of the customer's head without changing his grip on the handle or otherwise varying his technique.

The principles of my invention are also applicable to razor, shears and other types of hair-cutting mechanism. For example, as shown in Figs. 8 and 9, the staggered relationship of cuting lengths may be applied to a hair-cutting razor, for instance of the safety razor type. As shown, a razor blade 50 is provided with teeth having cutting edges 51, 52, and 53 of respectively shorter lengths. A suitable guard member 60 may be provided below the razor blade itself, said guard member having projecting teeth with upturned fingers 61 to cover the ends of the long teeth 51. Suitable means, such as a frame member 62 of a common type, may be provided for attaching the razor blade and guard frame to handle 63.

In operation, the hair-cutting razor described,

is adapted to cut hair of varying lengths, such as the three lengths shown, simply by moving the serrated blade through the hair. The hairs are not only cut of varying lengths at any particular line of cutting movement, but also the hairs may be individually tapered or cut on a bias due to the fact that they fall into the cutting notches and are thus cut on either side to a tapered point.

The invention in its broader aspects is not limited to the specific mechanisms shown and described but departures may be made therefrom within the scope of the accompanying claims without departing from the principles of the invention and without sacrificing its chief advantages.

What I claim is:

1. A hair clipper including in combination a fixed blade having cutting teeth adapted to support hairs to be cut in the notches between the teeth, said notches being of different depths to support hairs for cutting in different planes while the ends of the teeth terminate in a substantially straight line and a movable shearing blade having cutting teeth reciprocable across the teeth of the fixed blade for cooperating with each of said notches, thereby to cut hairs to different lengths on one movement of the blades.

2. A hair clipper including in combination a fixed blade having cutting teeth adapted to support hairs to be cut in the notches between the teeth, said notches being of different depths to support hairs for cutting in different planes while the ends of the teeth terminate in a substantially straight line and a movable shearing blade having cutting teeth with notches of uniform depth reciprocable across the teeth of the fixed blade for cooperating with each of said notches, thereby to cut hairs to different lengths on one movement of the blades.

FRANÇOIS RENÉ MARCEL.