Jan. 1, 1935. J. H. BORDEN ET AL 1,986,620

ELEVATOR

Filed June 21, 1934 3 Sheets-Sheet 1

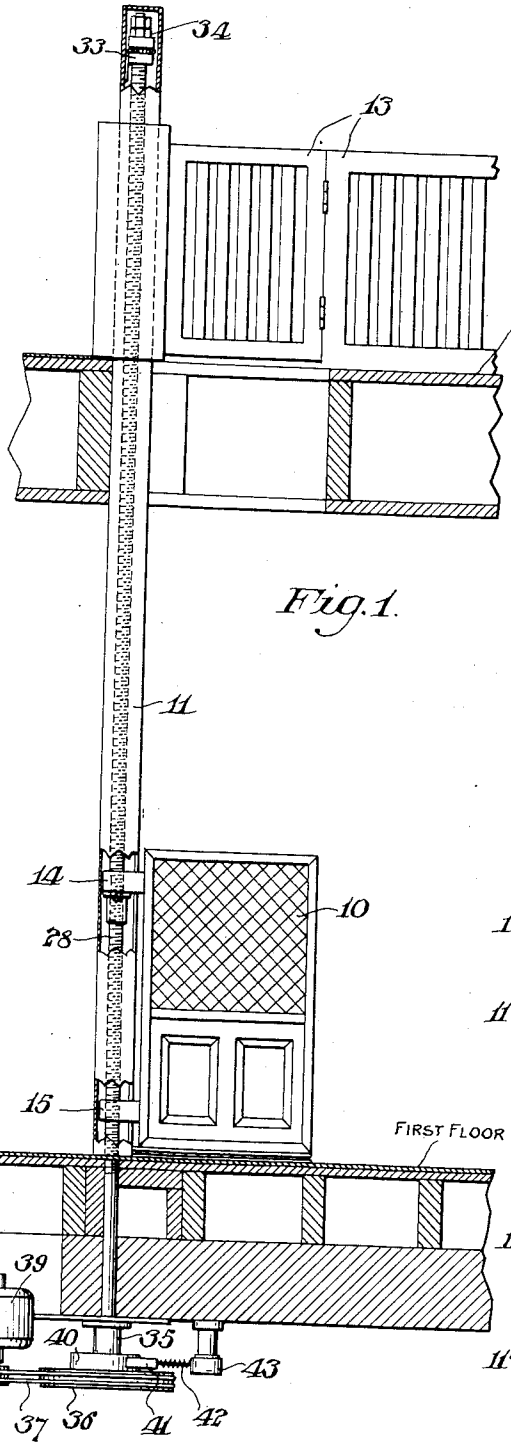

Fig. 1.

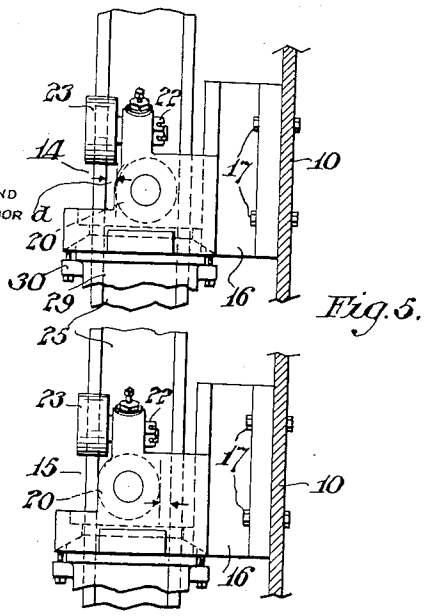

Fig. 5.

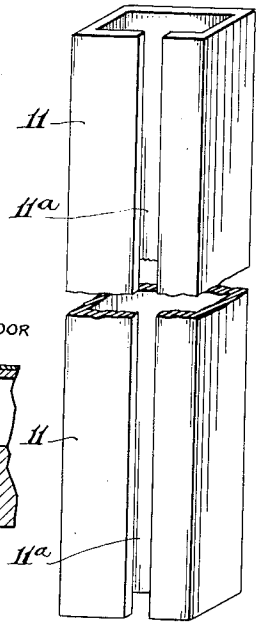

Fig. 4.

Inventors

Joseph H. Borden

Nicholas P. Guilbert, Jr.

Jan. 1, 1935. J. H. BORDEN ET AL 1,986,620

ELEVATOR

Filed June 21, 1934 3 Sheets-Sheet 2

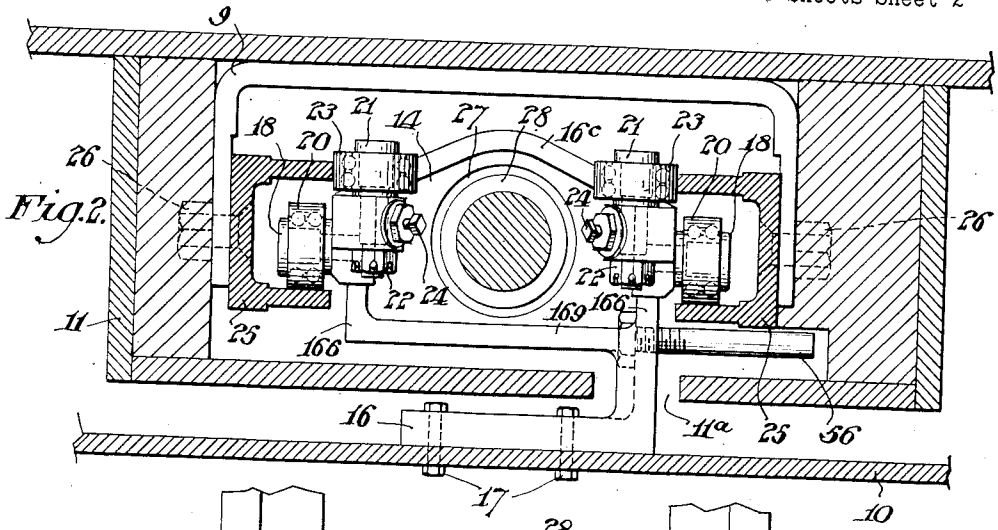

Fig. 2.

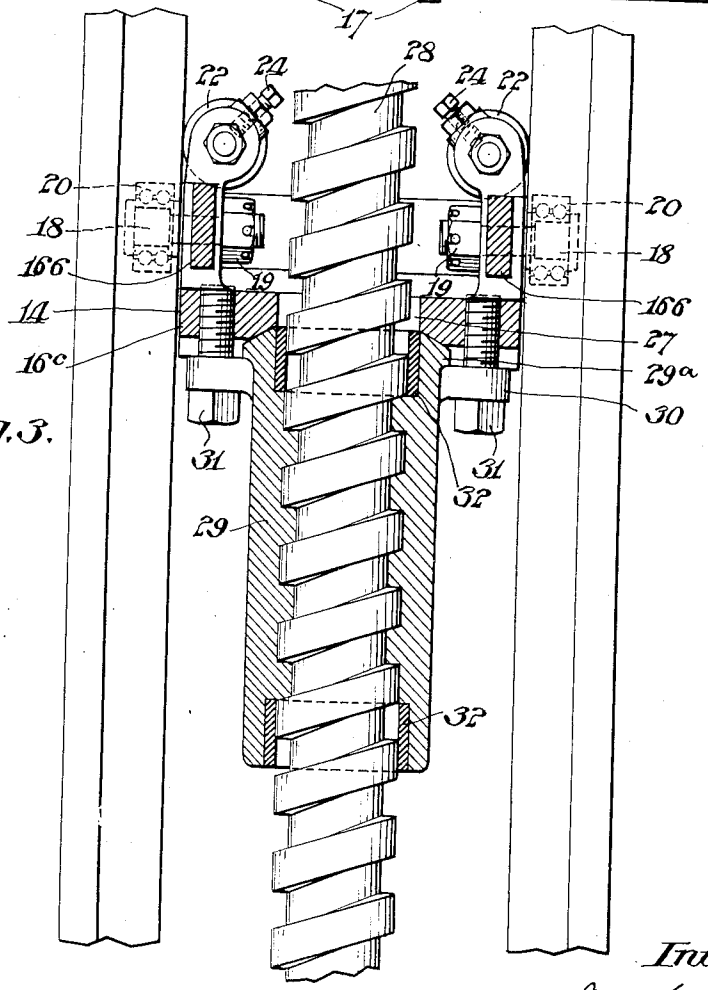

Fig. 3.

Inventors:
Joseph H. Borden
Nicholas P. Guillot, Jr.

Jan. 1, 1935. J. H. BORDEN ET AL 1,986,620

ELEVATOR

Filed June 21, 1934 3 Sheets-Sheet 3

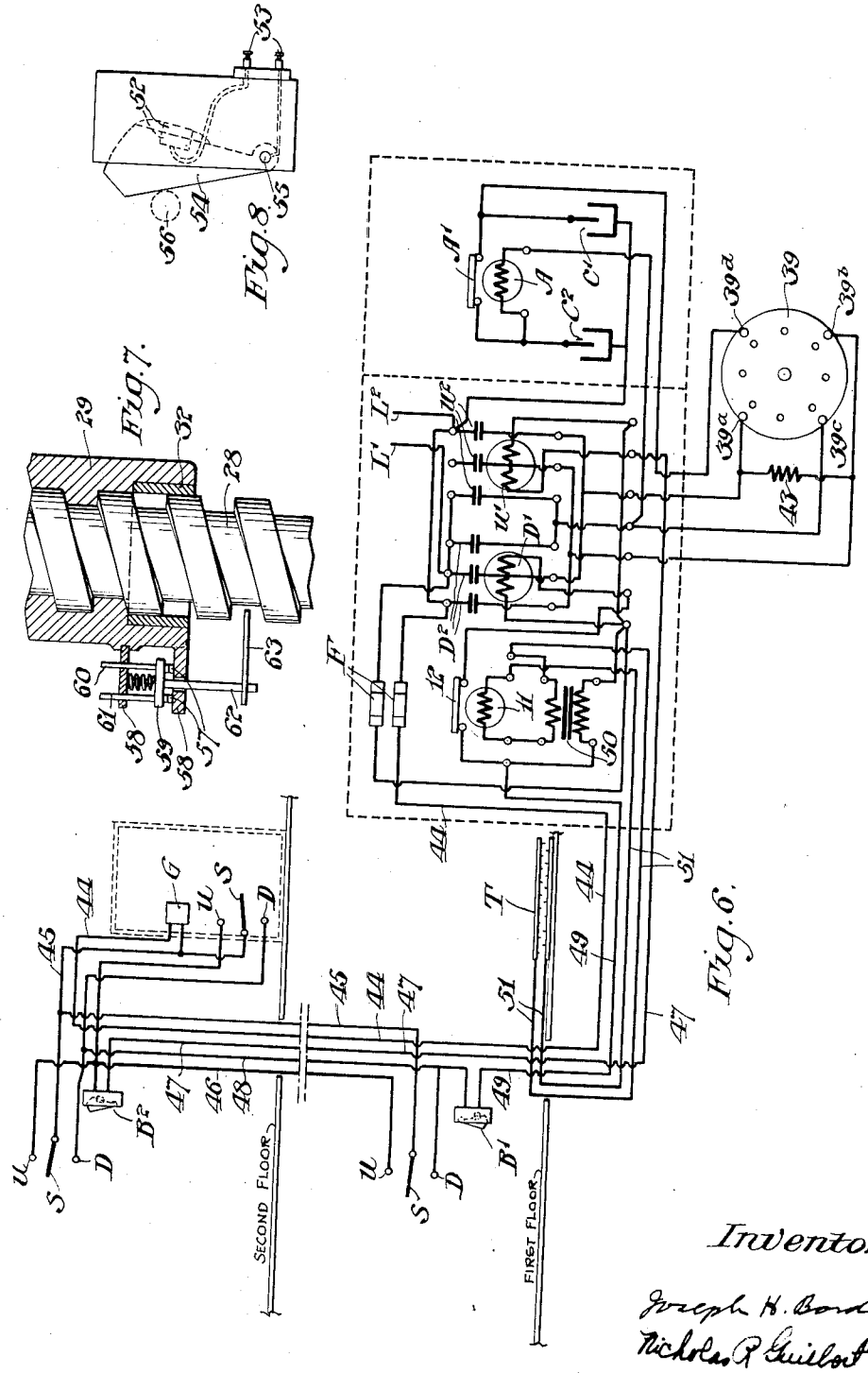

Fig. 6.

Fig. 7.

Fig. 8.

Inventors:
Joseph H. Borden
Nicholas R. Guilbert, Jr.

Patented Jan. 1, 1935 1,986,620

UNITED STATES PATENT OFFICE

1,986,620

ELEVATOR

Joseph H. Borden, Elkins Park, and Nicholas R. Guilbert, Jr., Philadelphia, Pa., assignors to Atlantic Elevator Company, Philadelphia, Pa., a corporation of Pennsylvania

Application June 21, 1934, Serial No. 731,664

23 Claims. (Cl. 187—24)

Our invention relates to elevators which, while they are of general application, are particularly suitable for installation in existing buildings or in private homes, apartments, and similar small buildings.

In accordance with our invention, we have devised an elevator which may be installed in an existing building with a minimum of alteration of the building structures; one which requires the use of no shaft of the customary type and no unsightly mechanism or conspicuous structure which would be objectionable, for example, in a private home; and one providing a maximum of safety.

More particularly, in accordance with our invention, the guiding and propelling mechanism for an elevator is enclosed within a single housing. The elevator car is external to the housing and is provided with supporting members or brackets projecting through, and travelling in, a slot in the housing and connected with the guiding and propelling mechanism therein. The housing enclosing the guiding and propelling mechanism is preferably relatively small in cross-sectional area compared to that of the car and may have the dimensions and structural characteristics of an ordinary post of the building in which the elevator is installed, and may be finished to harmonize with the interior decorations thereof.

More specifically in accordance with our invention, there is provided a single vertical guiding member and a vertical screw in juxtaposition to the guiding member, these two members being enclosed within a single housing. One or more supporting brackets or followers attached to the elevator car at vertically spaced points project through the longitudinal slot in the housing and engage the vertical guiding member. One of these followers may include as a unitary part thereof a traveling nut cooperating with the vertical screw to propel the elevator car upwardly or downwardly, as desired. The vertical screw may be driven by any suitable means, such as an electric motor positioned beneath or above the lowermost or uppermost floor of the car travel.

In accordance with another feature of our invention, the limits of travel of the car are entirely above a given floor as, for example, the first floor of a private home, and a safety treadle switch is disposed beneath the elevator car and is connected to control the driving motor or propelling mechanism of the car to prevent descent of the car in case a person or object should be directly beneath the car.

For a better understanding of our invention, together with other and further features thereof, reference is had to the following description taken in connection with the accompanying drawings and its scope will be pointed out in the appended claims.

In the drawings, Fig. 1 is a view of our elevator in front elevation, partly in section;

Figs. 2 and 3 are, respectively, a detailed top plan view and a view in elevation, partly in section of the car follower which engages the vertical guide and propelling screw;

Fig. 4 is a perspective view of the enclosing housing for the propelling and guiding mechanism;

Fig. 5 is a view in side elevation of the upper and lower followers showing their vertical offset;

Fig. 6 is a circuit diagram of a control arrangement particularly suitable for application to our elevator;

Fig. 7 is a fragmentary detail of a protective device which may be applied to our elevator, while Fig. 8 is a conventional representation of a limit switch which may be utilized in the control circuit of Fig. 6.

Referring now more particularly to Fig. 1 of the drawings, there is shown an elevator embodying our invention and adapted for travel between only a first and a second floor. This elevator comprises a car 10 guided and propelled by mechanism enclosed entirely within a single housing or hollow post 11. The car, when elevated from the first to the second floor passes through an opening 12 in the ceiling structure separating the first and second floor and this opening may be protected by a suitable railing and gate 13. The car 10 is supported by follower means or guiding means comprising a pair of followers 14 and 15 secured to the car 10 near its top and bottom, respectively.

A better understanding of the followers 14 and 15, together with propelling and guiding mechanism with which they cooperate, may be obtained from Figs. 2 and 3 of the drawings which illustrate, respectively, top plan and longitudinal sectional views of the follower 14. It will be seen that this follower comprises a substantially U-shaped bracket 16, one arm of which is attached to the side of the car 10 by a pair of bolts 17. The inner arm 16*a* of the bracket 16 has projecting from opposite ends thereof extensions 16*b* which are joined by a horizontal web or plate member 16*c*. The base

member of the U-shaped bracket 16 travels in a vertical slot 11*a* in the housing 11. Supported from the arms 16*b* are a pair of stub shafts 18 having their axes parallel to the side of the car 10 and secured to the brackets by suitable lock nuts 19. Rollers 20 are mounted on the stub shafts 18, preferably with ball or roller bearings. Stub shafts 21 are also secured in the arms 16*b* by suitable lock nuts 22 with their axes vertical to the side of the car 10 to which the follower 14 is attached. Rollers 23, similar to the rollers 20, are journalled on the stub shafts 21, also preferably with ball or roller bearings.

Supported within the housing 11 is a guide member 9 having a channel-shaped cross-section to the outer ends of the outstanding arms of which the guides 25 are secured by suitable bolts 26. The guides 25 are also preferably of channel-shaped cross-section and have the inner surfaces and end surfaces of their projecting arms machined to form guide surfaces.

As shown clearly in Fig. 2, the rollers 20 engage and roll along the inner surfaces of the lower arms (as referred to Fig. 2) of the guides 25, while the rollers 23 engage the end surfaces of the upper arms (as referred to Fig. 2) of the guides 25, thus determining the lateral position of the car 10 in both directions in a plane normal to the direction of travel. The web member 16*c* is provided with a circular opening 27 through which passes a vertical propelling screw 28. In order to propel the car 10, a traveling nut 29 threaded on the screw 28 is provided with an enlarged head 29 which is clamped between the web 16*c* and a collar 30 by means of cap screws 31. The threads of the nut 29 are preferably cut to provide a very loose fit with the threads of the screw 28 in order to prevent any binding between the nut 29 and screw 28 occasioned by slight misalignment of the follower 14 and the screw 28. The nut 29 may be provided with inserts 32 of suitable bearing material, such as bronze, babbitt or the like, to procure a proper alignment between the nut 29 and the screw 28.

Due to the fact that the car 10 is supported entirely from one side, its weight will produce a torque about the points of engagement of the followers 14 and 15 with the guides 25. This torque will be in such a direction that the rollers 20 of the upper follower 14 will bear against the guide surfaces adjacent the car 10 while the rollers 20 of the follower 15 will bear against the opposite guide surfaces. This is shown more clearly in the fragmentary view of Fig. 5, in which the near guide 25 is omitted for the sake of clarity. From this view, it will be seen that the rollers 20 of the upper follower engage the right-hand guide surface of the guide 25, while the rollers 20 of the lower follower 15 engage the left-hand guide surface of the guide 25. The diameter of the rollers 20 is preferably substantially smaller than the spacing of the arms of the guides 25 so that there will be a clearance *d* between the roller 20 of the follower 14 and the left-hand guide surface, and a similar clearance between the roller 20 of the lower follower 15 and the right-hand guide surface. In order to prevent a tilting of the car 10 occasioned by this pivotal movement about the followers 14 and 15, the roller 20 of the follower 14 is preferably offset from the vertical with respect to that of the follower 15, as shown in Fig. 5. This arrangement ensures that the car will remain vertical at all times in spite of substantial clearance allowed between the rollers 20 and the guides 25 to prevent any possibility of binding.

By means of the mechanical propelling and guiding mechanism just described, the car 10 may be raised and lowered by a single substantially unitary guiding and propelling mechanism without any substantial sway or lateral movement about the axis of the propelling screw 28. As pointed out above, the weight of the car 10 exerts a torque upon the rollers 20 against the opposite guide surfaces of the guides 25. This weight of the car, acting through the pair of rollers 20 laterally displaced, is more than sufficient to overcome any torque exerted by the friction of the screw 28 with the nut 29, and maintains the car in a stable position, the rotation of the screw providing only a uniform vertical movement. Similarly, the upper and lower rollers 23 prevent any movement of the car 10 about its horizontal axis of symmetry through the fact to which the followers 14 and 15 are attached.

It will be seen that, in accordance with our invention, there is provided an elevator in which the car is supported entirely from one side by propelling and guiding mechanism completely enclosed within a single housing or hollow post which has a cross-sectional area relatively small compared to that of the car. This housing or post 11 may have a wood finish or other decorative finish harmonizing with the interior of the building in which the elevator is installed. Such a single post of relatively small cross-sectional area results in a minimum alteration of the existing structure of the building and, at the same time, is substantially inconspicuous. Moreover, by the use of a screw type of propelling mechanism, a maximum safety is procured, as the pitch of the screw is such that the weight of the elevator will not reverse its movement. With such an arrangement, the car may conveniently be elevated to the second floor, when not in use, in order still further to minimize interference with the existing arrangement or use of the building in which the elevator is installed.

The screw 28 is supported in the housing 11 by means of an upper bearing plate or bracket 33, a thrust bearing 33*a*, preferably of the ball or roller bearing type, and a pair of lock nuts 34. It is also journalled in a lower bearing 35 secured underneath the first floor. By thus suspending the screw, it acts only as a tension member in supporting the car and it may be much smaller in cross-section than if supported from the bottom, in which case it would act as a column. On the end of the screw 28 is mounted a pulley 36 which may be driven by a belt 37 from the pulley 38 of a motor 39. Secured on the shaft of the screw 28 is a brake drum 40 with which cooperates a brake shoe 41 biased to operative position by a spring 42. A solenoid 43 is provided for retracting the brake shoe 41 under certain conditions, as described more fully hereinafter.

While any suitable control scheme may be utilized for controlling the motor 39 propelling the elevator, we have illustrated in Fig. 6 a diagram of a control circuit particularly adapted for use with our elevator. The motor 39 of Fig. 1 is shown in Fig. 6 as being of the capacitor type and is essentially a 2-phase induction motor, one phase of which is energized directly from a single-phase alternating current supply

circuit and the other, from the supply circuit through phase-shifting capacitors. The control system comprises essentially a plurality of control switches S located in the elevator car and on the several floors between which the elevator operates, in the case illustrated, only a first and a second floor; "up" contactor or relay U1; a "down" contactor or relay D1 and an accelerating relay A. The contacts U2 and D2 of the contactors U1 and D1, respectively, serve to connect supply lines L1 and L2 with either polarity directly to the terminals 39*a* and 39*b* of the motor 39, constituting one phase winding. The adjacent contacts U2 and D2, as viewed in Fig. 6, are connected directly in parallel and serve to connect the line L1 to the terminal 39*c*, while the other terminal 39*d* of the same motor phase-winding is connected through capacitors C1 and C2, in parallel, to the other line L2. Thus, the phase of the voltages impressed upon the two phase windings of the motor 39 are displaced to provide a polyphase magnetomotive force therefor, and to render it capable of starting from a single-phase alternating current circuit.

The lines L1, L2 are connected to the control circuit through the fuses F, the line L1 being connected to one side of the operating coils of the relays U1, D1. The line L2 is connected to the control switches S, located on the several floors and in the elevator car, through a conductor 44 leading to a gate switch G, of any suitable well-known type, which serves to interrupt the control circuit except when the gate of the car is closed. The other terminal of the switch G is connected to a conductor 45 interconnecting the blades of the several control switches S. The "up" contacts U of the several switches S are connected together to a common conductor 46 which is connected to an upper limit switch B2, the other terminal of which is connected to a return conductor 47 connected, in turn, to the other terminal of the winding of the relay U1. Similarly, the "down" contacts D of the several switches S are connected to a common conductor 48 which is connected to one terminal of a lower limit switch B1, the other terminal of which is connected to a return conductor 49 and, through the contacts T2 of a safety relay T1, (to be described hereinafter) to the other terminal of the winding of the relay D1. As described above, the capacitor C2 is connected in parallel with capacitor C1 through the contacts A1 of an accelerating relay A, the two capacitors being included in series with the motor terminal 39*d*. The operating coil of the accelerating relay A is connected between the motor terminals 39*c* and 39*d* through its own contacts A1.

The limit switches B1 and B2 may be of any of the types well-known in the art, though there is illustrated schematically in Fig. 8 one arrangement suitable for use in our control system. In this arrangement, a pair of normally-closed contacts 52 are enclosed within a suitable housing and connected to terminals 53, one of the contacts being fixed in the housing, while the other is mounted on a cam 54 pivoted in the housing at 55. The structure is mounted so that the cam 54 lies in the path of travel of an operating rod 56 attached to the follower 14 (Fig. 2). Engagement of the cam 54 by the operating rod 56 is effective to open the contacts 52.

The operation of the above-described control system will be well understood by those skilled in the art. In brief, assuming that the car is at the second floor, as indicated in the diagram of Fig. 6, and that it is desired to proceed to the first floor, any of the control switches S may be operated to close its respective down contact D. Assuming the gate of the car to be closed, so that the gate switch G is closed, the control circuit may then be traced from the line L2, fuse F, conductor 44, gate switch G, conductor 45, switch S, conductor 48, lower limit switch B1, return conductor 49, contacts T2, operating coil of relay D1, fuse F to L1. The relay D1 closes its contacts D2 which, as described above, connects the lines L1, L2 directly to the motor terminals 39*a* and 39*b* and also connects the lines L1, L2 to the terminals 39*c*, 39*d* through the capacitors C1, C2 connected in parallel. Simultaneously, the solenoid coil 43, connected between the motor terminals 39*a*, 39*b*, is energized and retracts the brake shoe 41 (Fig. 1) against its biasing spring 42. The motor 39 starts and rotates the screw 28 in such a direction as to return the car to the first floor.

The car will proceed only so long as the particular switch S which has been operated is retained in engagement with its down contact D. When the elevator reaches the proper level at the first floor, the operating rod 56 on the follower 14 engages the limit switch B1 opening the circuit of the return conductor 49 thereat and deenergizing the down relay D1 which, in turn, deenergizes the motor and the retracting solenoid 43; thereupon, the motor stops and the brake 41 is applied to stop the car. In case it is desired to move the car back to the second floor, any one of the several control switches S is moved to engage the "up" contact U, thus energizing the return conductor 47 by means of a circuit similar to that described above to excite the operating coil of the up relay U1, which connects the motor terminals 39*a*, 39*b* to the lines L1, L2 with a reverse polarity. At the same time, the solenoid brake 41—42—43 is released and the motor rotates in a reverse direction, propelling the car to the second floor. As in the downward movement, the motor of the car will be stopped at the proper level by the engagement of the operating rod 56 with the limit switch B2.

When our elevator is to be operated upwardly only from a given floor as, for example, the first floor, it is desirable to have a protective device to prevent the descent of the elevator upon any person or object that may have chanced beneath the car. This is accomplished in the system shown in Fig. 6 by means of a treadle or safety switch or mat T, which may conveniently be made relatively thin for placement under a rug or carpet. The contacts of the treadle switch T may be connected to energize the operating coil of the relay T1 directly from the lines L1, L2 through the "down" control circuit, but preferably, as shown, a voltage reducing transformer 50 is included in this circuit. One terminal of the primary winding of the transformer 50 is connected directly to the terminal L1 through the fuse F, while the other is connected to the down return conductor 49 so that the transformer 50 is energized whenever the down control circuit is completed. The secondary winding of the transformer 50 is connected to energize the operating coil of the relay T1 in series with the contacts of the treadle switch T which may thus be designed for a very low voltage.

Upon the occurrence of a person or any other body beneath the elevator car and the operation of any of the control switches to the down contact, the transformer 50 will be energized from the down return conductor 49 and, at the same time, the circuit of the coil of the relay T1 will be completed by the safety switch T and the relay T1 will operate to open its contacts T2 which are in series with the operating coil of the down relay D1. The relay D1 will thus be deenergized to stop or prevent the operation of the motor 39 in such a direction as to lower the car. It will be noted, of course, that the "up" control circuit is completely independent of the treadle switch T, so that the car may, at any time, be operated upwardly and away from any person or object therebeneath.

In Fig. 7, there is illustrated a safety device which may be applied to our elevator to interrupt its operation in case the threads of the screw 28 or the nut 29 become worn to a dangerous degree. This device comprises a pair of cooperating contacts 57 mounted on a bracket 58, supported from the traveling nut 29, and on a reciprocable member 59 retained in position by suitable guides 60 and biased to maintain the engagement of the contacts, by a spring 61. From the member 58 depends a rod 62 to which is attached an auxiliary follower extending into the root of the thread of the screw 28. The contacts 57 may preferably be included in the main supply conductor 44 to the control switches S and connected in series with the contacts of the gate switch G. During normal operation, the safety contacts 57 are inoperative. However, in case the thread of either the screw 28 or the nut 29 should become worn to a dangerous degree, the auxiliary follower 63 will be lowered a corresponding amount and will finally engage the top of the thread immediately below the root which it normally follows. This engagement will be effective to raise the depending rod 62 and to break the circuit of the contacts 57, thus interrupting the supply circuit to the control switches and rendering the elevator inoperative.

While we have described what we at present consider the preferred embodiment of our invention, it will be obvious to those skilled in the art that various changes and modifications may be made without departing from our invention and we, therefore, aim in the appended claims to cover all such changes and modifications as fall within the true spirit and scope of our invention.

What we claim is:

1. An elevator comprising a single unitary vertical guide structure provided with a plurality of vertical guide surfaces, a car external to said guide structure, the guide surfaces of said structure being spaced by distances which are small relative to the dimensions of the car, follower means secured to said car and engaging said guide surfaces at substantially and vertically spaced points, and means for propelling said car comprising a single continuous vertical screw in juxtaposition to all of said guide surfaces and a complete nut cooperating therewith, one of said screw and nut elements being secured to said car.

2. An elevator comprising a single unitary vertical guide structure provided with a plurality of vertical guide surfaces, a car external to said guide structure, the guide surfaces of said structure being spaced by distances which are small relative to the dimensions of the car, follower means secured to said car and engaging said guide surfaces at vertically spaced points near the top and bottom of said car respectively, and means for propelling said car comprising a single vertical screw in juxtaposition to all of said guide surfaces and a complete nut cooperating therewith and secured to said car.

3. An elevator comprising a single unitary vertical guide structure provided with a plurality of vertical guide surfaces, a car external to said guide structure, the guide surfaces of said structure being spaced by distances which are small relative to the dimensions of the car, follower means secured to said car and engaging said guide surfaces at vertically spaced points and in two planes inclined to each other and parallel to the direction of travel, and means for propelling said car comprising a single vertical screw in juxtaposition to all of said guide surfaces and a nut cooperating therewith and secured to said car.

4. An elevator comprising a single unitary vertical guide structure provided with a plurality of vertical guide surfaces, a car external to said guide structure, the guide surfaces of said structure being spaced by distances which are small relative to the dimensions of the car, a pair of followers secured to one side of said car at vertically spaced points and engaging said guide surfaces in a plane parallel to said side of the car and also in a plane perpendicular thereto and parallel to the direction of travel, and means for propelling said car comprising a single vertical screw in juxtaposition to all of said guide surfaces and a nut cooperating therewith and secured to said car.

5. An elevator comprising a single unitary vertical guide structure having a substantially channel shaped cross-section provided with a plurality of vertical guide surfaces, a car external to said guide structure, the guide surfaces of said structure being spaced by distances which are small relative to the dimensions of the car, follower means secured to said car and engaging said guide surfaces at substantially and vertically spaced points, and means for propelling said car comprising a single continuous vertical screw disposed within said guide channel and a complete nut cooperating therewith and secured to said car.

6. An elevator comprising a single unitary vertical guide structure including a pair of opposed channel members each having guide surfaces normal to each other, a car external to said guide structure, the guide surfaces of said structure being spaced by distances which are small relative to the dimensions of the car, a pair of followers secured to said car at vertically spaced points, each of said followers having a pair of rollers mounted on axes in planes normal to each other and engaging said normal guide surfaces, and means for propelling said car comprising a single vertical screw in juxtaposition to all of said guide surfaces and a nut cooperating therewith and secured to said car.

7. An elevator comprising a single unitary vertical guide structure, a car external to said guide structure, a pair of followers secured to said car at vertically spaced points and engaging said guide, and means for propelling said car comprising a single continuous vertical screw in juxtaposition to said guide, one of said followers including a complete nut cooperating with said screw.

8. An elevator comprising a single unitary vertical guide structure including a pair of opposed channel members provided with a plurality of vertical guide surfaces, a car external to said guide structure, the guide surfaces of said structure being spaced by distances which are small relative to the dimensions of the car, a pair of followers secured to said car at vertically spaced points, each of said followers having rollers engaging said opposed channel members, and a single vertical screw disposed between opposed channel members, one of said followers including a nut cooperating with said screw.

9. An elevator comprising a single unitary vertical guide structure including a pair of opposed channel members, a car external to said guide structure, and a pair of followers secured to said car at vertically spaced points, each of said followers having a pair of rollers each engaging an inner surface of an arm of one of said opposed channels and having also a pair of rollers each engaging an end surface of an arm of one of said channels.

10. An elevator comprising a single unitary vertical guide structure provided with a plurality of vertical guide surfaces, a car external to said guide structure, the guide surfaces of said structure being spaced by distances which are small relative to the dimensions of the car, and a pair of followers secured to one side of the car at vertically spaced points, said guide structure including a pair of opposed guiding surfaces parallel to said side of the car, and said followers having members interposed between said opposed guide surfaces with a substantial clearance, said follower members being offset from the vertical with respect to each other by a distance equal to said clearance.

11. An elevator comprising a single unitary vertical guide structure provided with a plurality of vertical guide surfaces, a car external to said guide structure, the guide surfaces of said structure being spaced by distances which are small relative to the dimensions of the car, follower means secured to said car and engaging said guide surfaces at substantially and vertically spaced points, and means for propelling said car comprising a single vertical screw in juxtaposition to all of said guide surfaces, means for rotating said screw without longitudinal motion, and a complete travelling nut cooperating with said screw and secured to said car.

12. An elevator comprising a single unitary vertical guide structure provided with a plurality of vertical guide surfaces, a car external to said guide structure, the guide surfaces of said structure being spaced by distances which are small relative to the dimensions of the car, follower means secured to said car and engaging said guide surfaces at substantially and vertically spaced points, and means for propelling said car comprising a single vertical screw in juxtaposition to all of said guide surfaces, means for rotating said screw, bearing means for retaining said screw from longitudinal motion, and a complete travelling nut cooperating with said screw and secured to said car.

13. An elevator comprising a single unitary vertical guide structure, a car external to said guide structure, follower means secured to said car and engaging said guide at substantially and vertically spaced points, and means for propelling said car comprising a single suspended vertical screw in juxtaposition to said guide structure, and a travelling nut cooperating therewith and secured to said car.

14. An elevator comprising a single unitary vertical guide structure provided with a plurality of vertical guide surfaces, a car external to said guide structure, the guide surfaces of said structure being spaced by distances which are small relative to the dimension of the car, follower means secured to said car and engaging said guide surfaces at substantially and vertically spaced points, a propelling screw mounted adjacent all of said guide surfaces, a thrust bearing disposed near the upper end of said guide supporting said screw, and a complete travelling nut cooperating therewith and secured to said car.

15. An elevator comprising a single vertical housing provided with a vertical slot and containing a single unitary vertical guide structure and a single vertical screw, a car external to said housing, and supporting brackets attached to one side only of said car and connected to said guide structure and said screw, said brackets travelling in the vertical slot in said housing.

16. An elevator comprising a single vertical housing containing a single unitary vertical guide structure, a single vertical screw suspended within said housing, a car external to said housing, the cross-sectional area of said housing being relatively small compared with that of said car, and supporting means attached to said car and connected with said guide structure and with said screw.

17. An elevator comprising a single unitary vertical guide structure, a car, follower means secured to said car and engaging said guide structure at substantially and vertically spaced points, means for propelling said car comprising a single vertical screw in juxtaposition to said guide structure and a nut cooperating therewith, one of said screw and nut elements being secured to said car, and a single housing enclosing said guide structure and said screw and having a cross-sectional area small compared to that of said car.

18. An elevator comprising a single unitary vertical guide structure, a car, follower means secured to said car and engaging said guide structure at vertically spaced points, a single screw in juxtaposition to said guide structure for propelling said car, and a single housing enclosing said guide structure and said propelling means and provided with a vertical slot in which travels said follower means.

19. An elevator comprising a single vertical housing containing guiding and propelling means, a car external to said housing and adapted to travel upwardly only from a given floor, said floor extending under the car, and means responsive to the presence of a body beneath the car for preventing the descent of the car.

20. An elevator comprising a single vertical housing containing guiding and propelling means, driving means for said propelling means, a car external to said housing and adapted to travel upwardly only from a given floor, said floor extending under the car, and a treadle switch disposed on the floor beneath said car and connected to control said driving means to prevent the descent of the car upon a body disposed beneath the car.

21. An elevator comprising a single vertical housing containing guiding and propelling means, an electric motor connected to drive said propelling means, a car external to said housing

and having limits of travel entirely above a given floor, said floor extending under the car, up and down control circuits for said motor, and a treadle switch disposed on the floor beneath said car and included in the down control circuit of said motor to deenergize the same upon the occurrence of a body beneath the car.

22. An elevator comprising a single unitary vertical guide structure, a car external to said guide structure, follower means secured to said car and engaging said guide structure at substantially and vertically spaced points, and means for propelling said car comprising a single continuous vertical screw in juxtaposition to said guide, said follower means including a nut loosely threaded on said screw and provided with auxiliary bearing means for maintaining said screw and nut in proper alignment.

23. An elevator comprising a single unitary vertical guide structure, a car external to said guide structure, follower means secured to said car and engaging said guide structure at substantially and vertically spaced points, and means for propelling said car comprising a single continuous vertical screw in juxtaposition to said guide, said follower means including a nut threaded on said screw with a substantial clearance and provided with a pair of auxiliary bearing inserts for maintaining said screw and nut in proper alignment.

JOSEPH H. BORDEN.
NICHOLAS R. GUILBERT, JR.

CERTIFICATE OF CORRECTION.

Patent No. 1,986,620. January 1, 1935.

JOSEPH H. BORDEN, ET AL.

It is hereby certified that error appears in the printed specification of the above numbered patent requiring correction as follows: Page 5, second column, line 8, claim 14, for "dimension" read dimensions; and that the said Letters Patent should be read with this correction therein that the same may conform to the record of the case in the Patent Office.

Signed and sealed this 12th day of February, A. D. 1935.

Leslie Frazer
Acting Commissioner of Patents.

(Seal)

CERTIFICATE OF CORRECTION.

Patent No. 1,986,620. January 1, 1935.

JOSEPH H. BORDEN, ET AL.

It is hereby certified that error appears in the printed specification of the above numbered patent requiring correction as follows: Page 5, second column, line 8, claim 14, for "dimension" read dimensions; and that the said Letters Patent should be read with this correction therein that the same may conform to the record of the case in the Patent Office.

Signed and sealed this 12th day of February, A. D. 1935.

Leslie Frazer
Acting Commissioner of Patents.

(Seal)