Oct. 21, 1969 C. E. DELANEY 3,474,317

SAFETY SWITCH CUTOFF CONTROL

Filed March 7, 1967 3 Sheets-Sheet 1

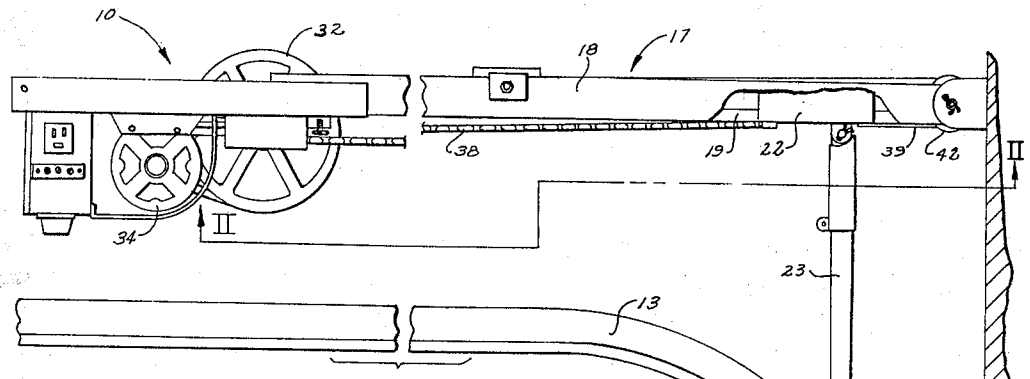

FIG. 1

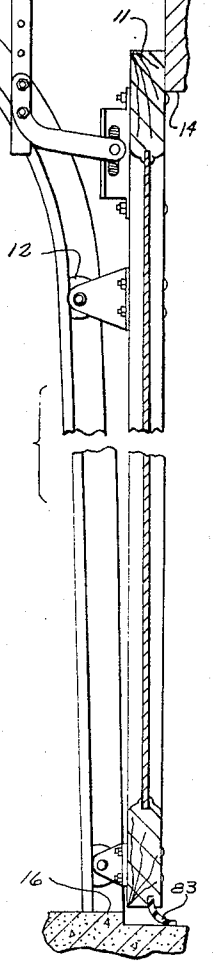

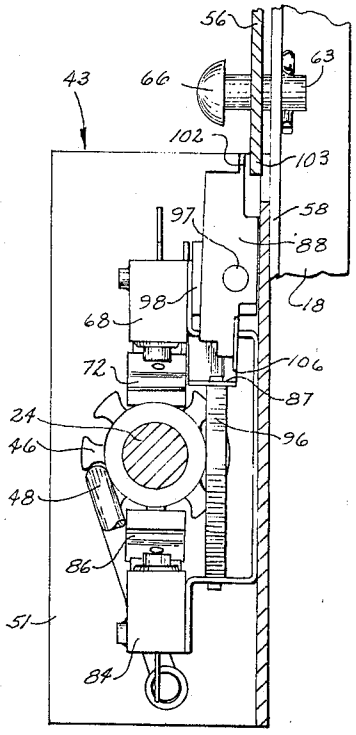

FIG. 4

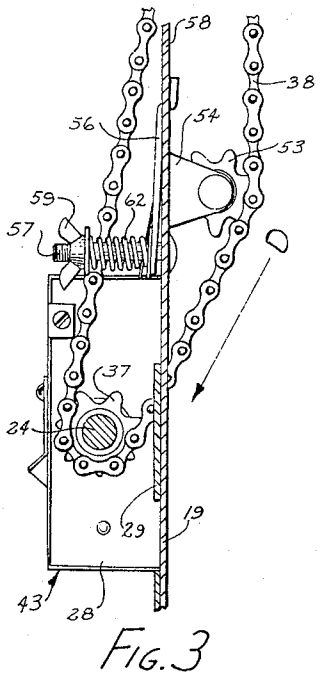

FIG. 3

INVENTOR.
CHARLES E. DELANEY

BY
Woodhams Blanchard & Flynn
ATTORNEYS

Oct. 21, 1969 C. E. DELANEY 3,474,317

SAFETY SWITCH CUTOFF CONTROL

Filed March 7, 1967 3 Sheets-Sheet 2

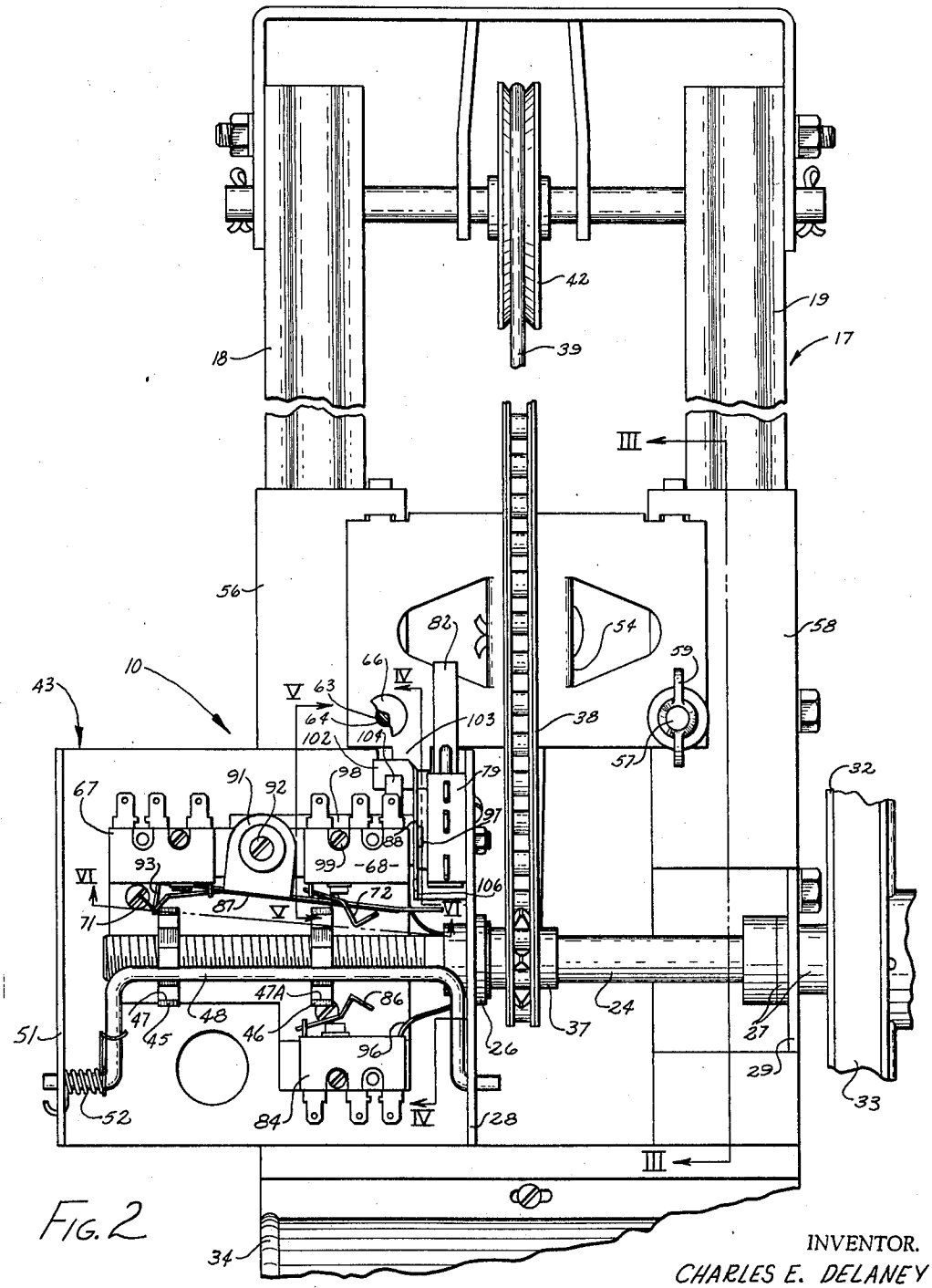

FIG. 2

INVENTOR.
CHARLES E. DELANEY

BY
Woodhams, Blanchard & Flynn
ATTORNEYS

Oct. 21, 1969 C. E. DELANEY 3,474,317

SAFETY SWITCH CUTOFF CONTROL

Filed March 7, 1967 3 Sheets-Sheet 3

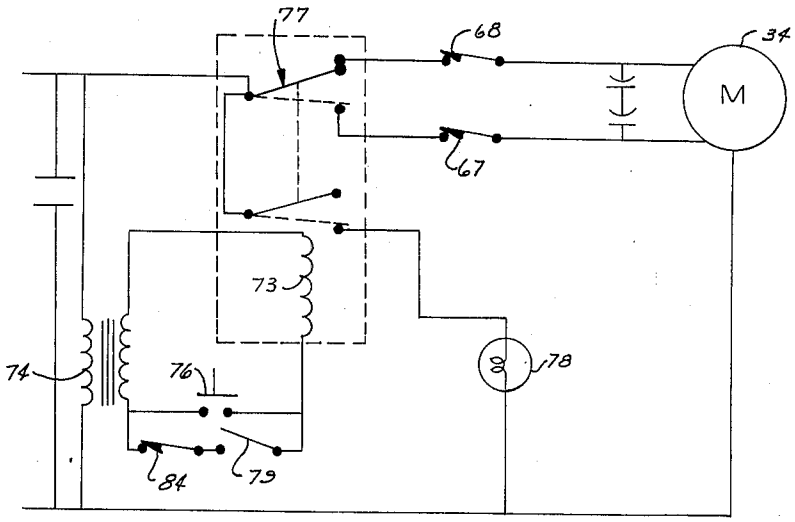

FIG. 8

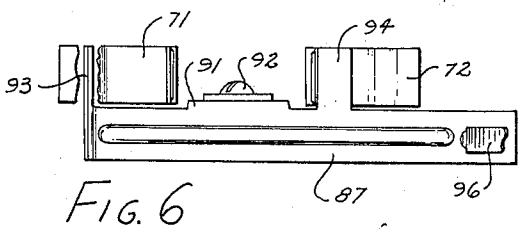

FIG. 6

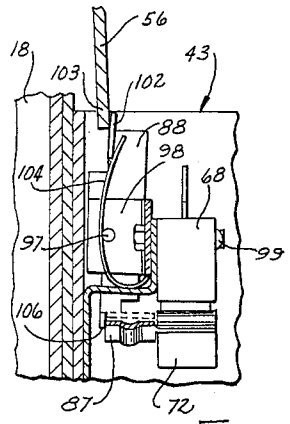

FIG. 5

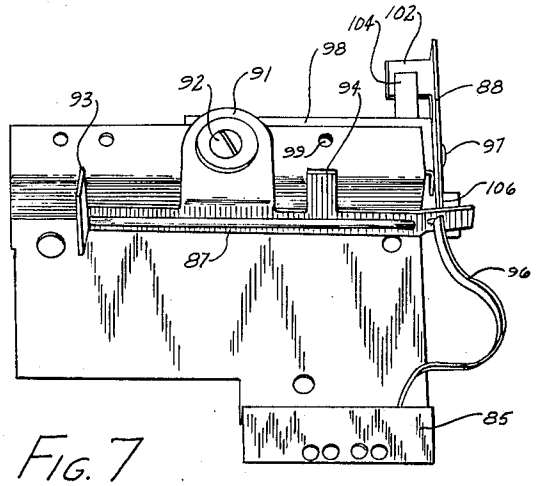

FIG. 7

INVENTOR.
CHARLES E. DELANEY

BY

Woodhams Blanchard & Flynn

ATTORNEYS

United States Patent Office 3,474,317
Patented Oct. 21, 1969

3,474,317

SAFETY SWITCH CUTOFF CONTROL

Charles E. Delaney, Irving, Tex., assignor to Overhead Door Corporation, Dallas, Tex., a corporation of Indiana

Filed Mar. 7, 1967, Ser. No. 621,263
Int. Cl. H02p 1/22, 1/40, 3/20
U.S. Cl. 318—266 5 Claims

ABSTRACT OF THE DISCLOSURE

A mechanized apparatus for opening and closing an upwardly actuated door comprising a beam normally mounted in a horizontal position above the door and including an endless flexible element extending around pulleys connected to a reversible motor. The endless element is connected to the door for moving same along guide tracks extending between the open and closed positions. The motor, which may be directly or remotely controlled, is energized through switch mechanisms which are automatically actuated to reverse the movement of the door if it engages an obstacle during all but a small part of its movement in the closing direction. However, during the latter part of its closing movement, engagement of the door with an object merely stops the door without reversing its direction of movement.

Persons acquainted with the operation of upwardly actuated doors having an electrical mechanism for effecting their movement are generally aware that some door operators have a safety switch whereby the direction of door movement is automatically reversed if the door engages an obstruction during its movement, particularly when such movement is in a downward or closing direction. This safety feature has been provided to prevent damage to equipment and injury to personnel which might result from inadvertent operation of the door when such objects are in the path of movement.

Door operators of this general character are often provided with switch means which prevent the door from reversing its direction of movement when the lower edge of the door bumps against the threshold. However, such switch means must be carefully set so that it operates just slightly before the door reaches the closed position. Otherwise, if the door strikes an object after the switch means is opened, the motor will continue to drive the door towards the closed position, with the possibility of damage to the door or operator.

In view of the close setting or timing of the switches used in existing operators, any small or thin object engaged by the door, even though the object may only be an inch or two in thickness, will promptly reverse the door's movement and send it back to its starting position. In certain geographical regions, such as the northern part of the United States, it is not common for snow and ice to build up quickly to the thickness of several inches directly in the path of the door if the door remains open for a relatively short period of time. Moreover, extremely cold or extremely hot weather will sometimes cause the material forming the apron or threshold of the door opening to expand or heave upwardly as much as an inch or more and thereby cause a reversing movement of the door into its fully open position.

Under all of the foregoing circumstances, it would be far preferable to have the door stop at the point of contact with the obstruction, be it snow, a child's toy or a distorted threshold, even though there might be a space of an inch or two open between the threshold and part of the lower edge of the door. In this position, the door would at least block the entrance of most of the bad weather or prevent trespassers from entering.

There are times when a door will engage an obstruction while it is being opened. In such case, it is at least desirable that the door should continue its movement in the opening direction after such a temporary stop. That is, even though the door will reverse its direction and move to the open position after it is stopped by a safety switch while being closed, it is not desirable to have the reverse situation, namely, to have the door return to the fully closed position after it has been stopped by an obstruction while being opened. For one reason, where the door can be operated by a remotely controlled radio-frequency signal, it would be possible for a stray signal of the same frequency to reverse the door movement after the emergency stop and while the object is still beneath the door.

It is possible for a relay in the remote transmitter to "hang up" in the closed position, or for the inexperienced person to continue to hold the manual switch in the closed position throughout the cycle of the closing operation of existing operators. It is, therefore, desirable to have a switching mechanism which must first be fully released (or opened) and then close for a second time before the door will reverse its direction of movement. Moreover, it is desirable that the switching mechanism be arranged so that the door will then open fully and come to a stop in the open position. On the other hand, if the door is stopped during its opening movement by an obstruction, then it is desirable that repeated operations of the manual switch or remote relay will merely cause the door to first stop and then move upwardly in small increments until it reaches the fully opened position before it can be reversed in its direction of movement toward the closed position.

Accordingly, the objects and purposes of the invention have been to provide a switch circuit and mechanism for a motorized door opener capable of overcoming the problems and achieving the results set forth above.

A further object of the invention has been the provision of a switch circuit and mechanism, as aforesaid, which is completely foolproof in operation, which is simple in construction, which can be adapted to existing circuits and mechanisms for effecting motorized operation of doors and which does not interfere in any way with the normal, manual or remote controls conventionally used for energizing the electrical system whereby the door is opened or closed.

Other objects and purposes of this invention will become apparent to persons familiar with this type of equipment upon reading the following specification and examining the accompanying drawings, in which:

FIGURE 1 is a broken, sectional view of an upwardly acting door in combination with a motorized door operator embodying the switch circuit and mechanism of the invention.

FIGURE 2 is a broken, sectional view taken along the line II—II in FIGURE 1 with the switch box cover removed.

FIGURE 3 is a sectional view taken along the line III—III in FIGURE 2.

FIGURE 4 is a sectional view taken along the line IV—IV in FIGURE 2.

FIGURE 5 is a sectional view taken along the line V—V in FIGURE 2.

FIGURE 6 is a broken, sectional view taken along the line VI—VI in FIGURE 2.

FIGURE 7 is a perspective view of a part of the switch mechanism shown in FIGURE 2.

FIGURE 8 is a diagrammatic sketch of the switch circuit with which the switch mechanism of the invention is combined.

For convenience in description, the terms "inner," "outer" and derivatives thereof will have reference to

the portion of the structure appearing in FIGURE 2. Also for convenience, the terms "upper," "lower," "front," "rear" and words of similar import will have reference to the structure appearing in FIGURE 1, it being understood that the rear of such structure will normally be positioned at the left end of FIGURE 1.

DETAILED DESCRIPTION

The objects and purposes of the invention, including those set forth above, have been met by providing an electric motor driven operator **10** (FIGURE 1), which may be manually or remotely controlled, for opening and closing an upwardly acting door **11**. One such door, known as the Overhead Door, is comprised of several horizontally hinged sections having rollers **12** mounted thereon for engagement with side rails **13** for guiding the movement of the door between a substantially vertical closed position and a substantially horizontal open position. However, the invention can be readily adapted to other types of doors and other patterns of door movement. The door **11** is designed to cover an opening **14** having a threshold **16**.

The operator **10** (FIGURE 1) includes an elongated beam **17** having a pair of slide rails **18** and **19** between which the shuttle **22** is supported for movement lengthwise thereof. Said shuttle **22** is pivotally connected by an arm **23** to the door **11** for effecting upward and downward movement thereof in response to left or rearward and right or frontward movement, respectively, of the shuttle **22**. The operator **10** has a drive shaft **24** (FIGURE 2) which is rotatably supported upon the beam **17** by bearings **26** and **27** mounted upon the side wall **28** of the switch box **43** and the bearing bracket **29**, respectively, near the rearward end of the beam, remote from the door opening **14**. A drive pulley **32** (FIGURE 2) is supported upon the shaft **24** adjacent the bearing **27** and is connected by a belt **33** (FIGURE 1) to a pulley, not shown, on the motor **34**.

A sprocket **37** (FIGURE 2) is secured upon the shaft **24** for engagement with a chain **38** which is connected at its opposite ends to the opposite ends of a cable **39** that extends around the pulley **42** supported upon the front end of the beam **17**, adjacent the door opening **14**. Two corresponding ends of the chain **38** and cable **39** are interconnected by mutual engagement with the shuttle **22**. Accordingly, as the cable and chain are moved around the sprocket and pulley **37** and **42**, respectively, the shuttle **22** is moved lengthwise of the slide rails **18** and **19**, whereby the door **11** is opened or closed. The lengths of the chain and cable are selected so that the chain is always in engagement with the sprocket **37** and the cable is always in engagement with the pulley **42** throughout the full movement of the shuttle **22**.

The drive shaft **24** extends into the switch box **43** (FIGURE 2) where it is threaded substantially the full length thereof and threadedly supports a pair of switch actuating nuts **45** and **46** having a plurality of closely spaced slots **47** and **47A**, respectively, in the peripheral portions thereof. A U-shaped timing bar **48** is pivotally supported upon and between the side walls **28** and **51** of the switch box **43**, and it is resiliently urged by the spring **52** into a pair of the slots **47** and **47A** in said nuts **45** and **46** for preventing rotation of said nuts when the shaft **24** is rotated. Thus, rotation of shaft **24** causes said nuts to move lengthwise of the shaft **24**.

As shown in FIGURE 3, the chain **38** engages an idler sprocket **53** supported by a bracket **54** on the safety switch actuating member **56** which is pivotally mounted upon the beam **17** near to the switch box **43** for movement substantially around an axis parallel with the drive shaft **24**. A bolt **57** loosely extends through an opening in a plate **58** on the rail **19** and through an opening in the lower end of the actuating member **56** after which it is engaged by a wing nut **59**. A spiral spring **62** is sleeved upon the bolt **57** between the actuating member **56** and the wing nut **59** whereby said actuating member is resiliently urged against the plate **58**.

As appearing in FIGURE 3, the chain **38** moves in direction D when it is urging the door **11** (FIGURE 1) in a downward direction. However, if the door encounters an obstruction which interrupts such downward movement, the chain cannot continue to move around the drive sprocket **37**, as urged by the shaft **24**. Consequently, the tension applied by the drive sprocket **37** to the chain **38** will tend to straighten out the bend in the chain where it passes partially around the idler sprocket **53**, whereby the actuating member **56** is moved leftwardly (FIGURE 3) against the contrary urging of the spring **62**. A stop **63**, which may be a headed pin connected to the rail **18** (FIGURE 4) and extending through an opening **64** (FIGURE 2) in the actuating member **56**, is arranged so that the head **66** thereof will positively stop movement of the actuating member **56** at a predetermined distance from the beam **17** to protect the elements engaged and operated thereby. The hinged movement of the actuating member **56** can also be controlled by increasing the tension on the spring **62**.

A pair of limit switches **67** and **68** (FIGURE 2) are mounted within the switch box **43** on the front side of the shaft **24**, and they have switch actuators **71** and **72**, respectively, which are engageable by the nuts **45** and **46**. As shown in FIGURE 8, the normally closed switches **67** and **68** are arranged in series with the forward and reverse circuits of the reversible motor **34** to disconnect the motor from its source of potential when the door reaches its fully open or fully closed poistion. The opening of the switches **67** and **68** can be accurately set by appropriate adjustment of the nuts **45** and **46** along the shaft **24**.

The electrical circuit of the operator **10** (FIGURE 8) also includes a relay coil **73** connected in series with the secondary of the transformer **74** and a normally open, manually operable pushbutton switch **76**. The coil **73** operates an armature **77** which is arranged to reverse the flow of current through the field of the motor **34** and thereby reverse the rotation of the motor. The armature **77** also connects a lamp **78** in parallel with the motor **34** while it is operating in the door opening direction.

The normally open safety switch **79** (FIGURES 2 and 8) has a switch actuator **82** (FIGURE 2) which, when engaged by the actuator member **56**, closes the safety switch **79**, which is in parallel with the normally open pushbutton switch **76**. Accordingly, if the door **11** strikes an obstruction as it is moving upwardly or downwardly, except when the door is close to the threshold **16**, the safety switch **79** is closed, thereby energizing the relay coil **73** whereby the armature **77** is shifted to the opposite position and, accordingly, the rotational direction of the motor, hence, the direction of the movement of the door, is reversed.

The threshold **16** (FIGURE 1) of the opening **14** constitutes an obstruction to movement of the door **11** and it would be undesirable to have the door reverse its direction of movement upon an engagement of the threshold by the resilient sealing element **83** on the lower edge of the door. Accordingly, a normally closed, safety switch cutoff switch **84** (FIGURES 2 and 8) is connected in series with the safety switch **79** and is positioned within the switch box **43** (FIGURE 2) so that its actuating arm **86** is engaged by nut **46** to open the switch **84** just before the door **11** reaches the lowest point in its downward movement, as determined by the opening of the limit switch **68** by nut **46**.

As stated above, there are certain types of obstructions which are relatively close to the ground and which do not warrant reopening of the door when they are engaged by the door, particularly during inclement weather. Accordingly, it is desirable to open the limit switch **68** if such an obstruction is engaged by the door when it is relatively close to the threshold **16**, but before the limit switch **68** would normally be opened by the nut **46** (FIG-

URE 2). This is accomplished by the linkage including the rocker arm **87** (FIGURES 6 and 7) and the trigger **88** (FIGURES 5 and 7), which open the limit switch **68** if downward movement of the door is obstructed during a predetermined, final portion of such movement, just before the door is closed.

Specifically, the rocker arm **87** (FIGURE 2) has between the ends thereof a frontwardly extending flange **91** which is pivotally supported upon the screw **92** within the switch box **43** at a point between the switches **67** and **68**. Said rocker arm **87** has a pair of integral elements **93** and **94** which project in a direction substantially parallel with the axis of the screw **92** on opposite sides of the flange **91**. The element **93** is located near the leftward end of the rocker arm **87** and is disposed between the switch actuator **71** and the switch **67** so that the leftward end of the arm **87**, as appearing in FIGURE 2, is moved upwardly by the switch actuator **71** when said switch **67** is opened by the nut **45**. The element **94** is disposed upon the rearward (or lower) side of the switch actuator **72** so that it causes the actuator **72** to open the switch **68** when the rightward end of the arm **87** is moved upwardly by the spring **96**, which is held under compression between the rightward end of the arm **87** and the casing of cutoff switch **84**.

The trigger **88** (FIGURES 4 and 5) is pivotally supported by means of the pin **97** upon the bracket **98** which is secured to the switch **68** by a screw **99**. The front (or upper) end of the trigger **88** has a sidewardly extending flange **102** (FIGURE 2) which is engageable by a tab **103** on the adjacent end of the actuating member **56**. A leaf spring **104** (FIGURE 5), which is gripped between the bracket **98** and the bracket **85** supporting the switch **68** engages the flange **102** for the purpose of urging same, hence, the upper end of the trigger **88** toward the rail **18**.

The lower edge **106** (FIGURE 4) of the trigger **88** is arranged and constructed so that it is engageable by the rightward end (FIGURE 2) of the arm **87** when the actuating member **56** is in its normal position adjacent the rail **18**, as shown in FIGURE 4. However, when the actuating member **56** is moved away from the rail **18**, as by an interruption in the movement of the chain **38** while the shaft **24** is being driven by the motor **34**, the trigger **88** is pivoted as shown in FIGURE 5 so that the lower edge **106** thereof is moved out of a position of engagement with the arm **87** so that said arm can be moved by spring **96** from the solid line position to the broken line position thereof in FIGURE 5. As a result, the element **94** (FIGURE 2) on said arm **87** moves the switch actuator **72** upwardly and thereby opens the limit switch **68**.

It will be apparent that the linkage including the rocker arm **87** and trigger **88** will not produce the desired results, namely, to merely stop the downward movement of the door, instead of stopping and reversing the movement of the door, unless the trigger **88** is tripped after the cutoff switch **84** is opened. To achieve the desired result, the switch **84** is positioned leftwardly of limit switch **68** (FIGURE 2) so that switch **84** is opened by nut **46** when the door reaches a position approximately six to eight inches from the ground in a preferred arrangement. Thus, when the door is above this level, if the door strikes an obstruction during its downward movement, stoppage of the door by the obstruction will cause the trigger **88** to be tripped whereby spring **94** will pivot arm **87** counterclockwise (FIGURE 2) to open the down limit switch **68**. Stoppage of the door will also cause the switch **79** to be closed to energize the coil **73** and move the armature **77** to its dotted position, whereby motor **34** is energized in the reverse direction to move the door upwardly toward its open position.

During the downward movement of the door, after the door reaches the point at which the switch **84** is opened, closure of the safety switch **79** by the actuating member **56** will have no effect upon the relay coil **73** because the switch **84** in series therewith will already be open. However, operation of the actuating member **56** will pivot the trigger **88** from its position of FIGURE 4 into its position of FIGURE 5 whereby the arm **87** will be pivoted in a counterclockwise direction (FIGURE 2) by the spring **96**, and thereby immediately open the switch **68** which de-energizes the motor **34**. Reference is made to a nonreversing range of six to eight inches for illustrative purposes, only.

It will be seen that if the door **11** is obstructed in its upward movement, during the first six or eight inches thereof from its fully closed position, while the cutoff switch **84** is still open, the circuit energizing the motor **34** will not be opened because the limit switch **67** is not opened by the arm **87**. Thus, if the door has frozen in a closed position, damage to the equipment is avoided by the opening of the overload switch on the motor.

If the trigger **88** is operated by the actuating member **56** while the door is moving either downwardly or upwardly within the six to eight inch range adjacent the fully closed position, operation of the pushbutton switch **76** or any other normal means for energizing the motor **34**, cannot cause the door to move in the closed direction until the door has reached its fully open position and the rocker arm **87** has been recocked by movement of the nut **45** into its FIGURE 2 position, whereby the trigger **88** can be moved by the spring **104** back into its cocked position of FIGURE 4. This results from the fact that the spring **96** will hold the rightward end of the rocker arm **87** in a raised position, where it will hold the switch **68** open, until said cocking of the rocker arm **87** is effected.

OPERATION

While the operation of the above-described door operator embodying the invention may be evident from such description, the following disclosure of the operation is given for further clarification. With the door **11** in the closed position of FIGURE 1, the operator may be energized for the purpose of opening or raising the door by manually closing the pushbutton switch **76** (FIGURE 8) whereby the armature **77** is shifted into the broken line position wherein current flows through the normally closed limit switch **67**. Thus the motor **34** is energized to move the shuttle **22** (FIGURE 1) rearwardly and, in so doing, raises the door **11**. If, during the first six or eight inches of such movement, the door is obstructed, the motor will attempt to continue such movement and, failing to do so, will open the overload switch of the motor in a conventional manner, whereby the motor is de-energized.

If the upward movement of the door **11** is obstructed after it exceeds a height of said six to eight inches, when the safety cutoff switch **84** is closed, the safety switch **79** will be closed and tend to reverse the movement of the door back toward its closed position. However, stoppage of the door also trips the trigger **88** so that arm **87** is moved to open the switch **68**. Thus, interruption of the upward movement of the door above the six to eight inch level will stop the door, by shifting the armature **77** into its solid line position of FIGURE 8, but will not reverse the door because the switch **68** is still held open by the rocker arm **87**, thereby de-energizing the motor **34**. Moreover, when the pushbutton switch **76** is closed again, the armature **77** will move to its broken line position of FIGURE 8, whereby the motor **34** will be energized to continue the opening movement of the door, which movement will continue until the nut **45** has opened the limit switch **67** and, by engagement between the switch actuator **67** and the element **93** on the arm **87**, recocked the arm **87** into its FIGURE 2 position, whereupon the limit switch **68** is again permitted to close.

If, while the door is being closed, it encounters an obstruction to its movement before it reaches a point within six or eight inches of the threshold **16**, the switch **79** will be closed to energize the coil **73** and shift the armature **77** from its solid line position of FIGURE 8 into its broken line position of FIGURE 8, thereby reversing the movement of the door and reopening it again.

As indicated previously, the rocker arm **87** remains in its tripped position, after the trigger **88** is operated by the actuating member **56**, until the door has again reached its fully opened position at which time the rocker arm is recocked by engagement of the nut **45** with the switch actuator **71**, hence, with the element **93** of the rocker arm **87**. Thus, the door cannot be closed inadvertently by closing the pushbutton switch **76**, or its equivalent, while the door is being opened or in the process of being opened, after the safety switch **84** has been operated. Moreover, it will be seen that the mechanism of the invention including the rocker arm **87**, the trigger **88** and related parts and switches are arranged so that the functions performed thereby cannot be overridden if the pushbutton switch is manually held closed while the door is closing. That is, pivoting of the trigger **88**, whereby the rocker arm **87** is tripped from its cocked position, will open the limit switch **68** regardless of whether the pushbutton is held closed or not. Consequently, it is first necessary to release the pushbutton switch and then close the switch again in order to effect a change in the movement of the door, and such change will result in reopening, not closing, of the door.

However, if the lower edge of the door **11** has reached a position within the six to eight inches of the threshold **16** before it encounters an obstruction, then the downward movement of the door will be stopped by the switching mechanism of the invention, in a manner described above, but the direction of movement will not be reversed. Moreover, when the door operator is again energized by the pushbutton switch **76**, the movement will be upwardly toward the fully open position and not downwardly again toward the closed position.

While a manual pushbutton switch **76** has been used to illustrate the operation of the switching mechanism of the invention, it will be recognized that switch **76** can be replaced by a radio-controlled switch serving the same purpose, namely, to electrically connect the coil **73** to the secondary of the transformer **48** for the purpose of operating the armature **77**, in the manner discussed above. Also, it will be recognized that the switching mechanism of the invention can be used with a variety of mechanisms for effecting the actual movement of the door into and out of its closed position and that specific linkage, pulleys, cables, chains and so forth have been described herein in detail for illustrative purposes, only.

The embodiments of the invention in which an exclusive property or privilege is claimed are defined as follows.

I claim:

1. In a device including a reversible electric motor connectible to a source of electric potential for opening and closing a door connected to the motor by drive means, a mechanism for controlling said motor comprising:

first circuitry means including a limit switch for connecting the motor in series with the source of potential for rotating the motor in one direction;

first means responsive to movement of said door for opening said limit switch as said door moves into one position;

second circuitry means for connecting the motor to said source for effecting rotation of the motor in the other direction;

relay means alternatively connecting said source to one of said first and second circuitry means;

third circuitry means connected to said source for operating said relay means, said third circuitry means including a first normally open switch and a second normally closed switch connected in series;

second means cooperating with said second normally closed switch for opening same when said door is at a selected distance from said one position;

third means cooperating with said first normally open switch for closing same when said movement of said door is interrupted before it reaches said one position; and

fourth means responsive to the interruption of said movement for opening said limit switch, whereby said motor is stopped if said second normally closed switch is open and said motor is reversed if said second normally closed switch is closed.

2. A device according to claim **1**, wherein said second circuit includes a second limit switch opened by said first means when said door moves into another position; and

wherein said second normally closed switch is opened when said door is approximately in the range of from six to eight inches from said one position.

3. A device according to claim **2**, including a manual, normally open control switch in parallel with said first normally open switch and said second normally closed switch for operating said relay means.

4. A device according to claim **3**, including an electrically energized element connected to said source through said relay means when said second circuit is connected to said source.

5. A device according to claim **3**, wherein said third circuit includes the secondary winding of a transformer having its primary winding in series with said source.

References Cited

UNITED STATES PATENTS

2,737,621	3/1956	Hamilton	318—266
2,826,658	3/1958	Jackson	318—266
2,887,311	5/1959	Klamp	318—266
3,045,164	7/1962	Russell	318—266

ORIS L. RADER, Primary Examiner

K. L. CROSSON, Assistant Examiner

U.S. Cl. X.R.

318—282, 300