US00D663121S

(12) United States Design Patent

Barth

(10) Patent No.: US D663,121 S
(45) Date of Patent: ** Jul. 10, 2012

(54) **BANANA CRATE**

(75) Inventor: **Christian Barth**, Pullach (DE)

(73) Assignee: **IFCO Systems GmbH**, Pullach (DE)

(**) Term: **14 Years**

(21) Appl. No.: **29/343,780**

(22) Filed: **Sep. 18, 2009**

(51) **LOC (9) Cl.** **03-01**

(52) **U.S. Cl.** **D3/304**; D3/305

(58) **Field of Classification Search** D3/304–314; D19/75, 78, 86, 90, 91, 99, 100; D6/566, D6/567, 569, 512, 553; 211/10, 11, 13.1, 211/45, 50, 52, 55, 87.01, 90.03, 126.9, 126.13, 211/88.01; 220/456, 9.4, 6, 7, 600, 1.5, 4.26, 220/4.28, 676; 206/503, 505, 509

See application file for complete search history.

(56) **References Cited**

U.S. PATENT DOCUMENTS

D201,843	S *	8/1965	Johnson	D3/307
D258,721	S *	3/1981	Steeg	D3/307
D292,634	S *	11/1987	Chabot	D3/307
D424,299	S *	5/2000	Varfeldt	D3/309
6,293,418	B1 *	9/2001	Ogden et al.	220/7
D458,753	S *	6/2002	Overholt et al.	D3/304
D600,018	S *	9/2009	Cope	D3/305
2009/0134176	A1 *	5/2009	Yamauchi	220/666
2009/0194530	A1 *	8/2009	Ringler	220/6

* cited by examiner

Primary Examiner — T. Chase Nelson
Assistant Examiner — Ania Aman
(74) *Attorney, Agent, or Firm* — Keating & Bennett, LLP

(57) **CLAIM**

The ornamental design for a banana crate, as shown and described.

DESCRIPTION

FIG. **1** is a top perspective view of a banana crate according to my new design in an unfolded state;

FIG. **2** is a bottom perspective view thereof in an unfolded state;

FIG. **3** is a top perspective view thereof in a folded state;

FIG. **4** is another top perspective view thereof in an unfolded state;

FIG. **5** is another bottom perspective view thereof in an unfolded state; and,

FIG. **6** is another top perspective view thereof in a folded state.

In the drawings, the broken lines depict unclaimed subject matter only and form no part of the claimed design.

1 Claim, 6 Drawing Sheets

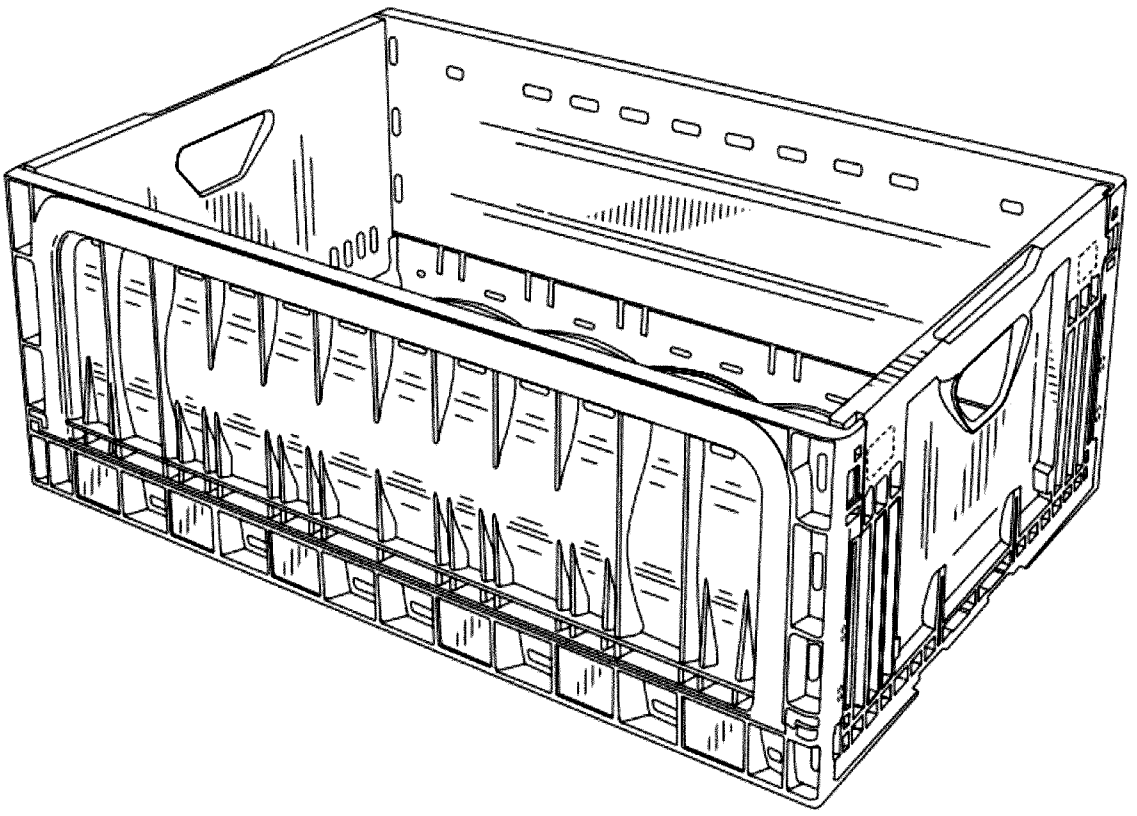

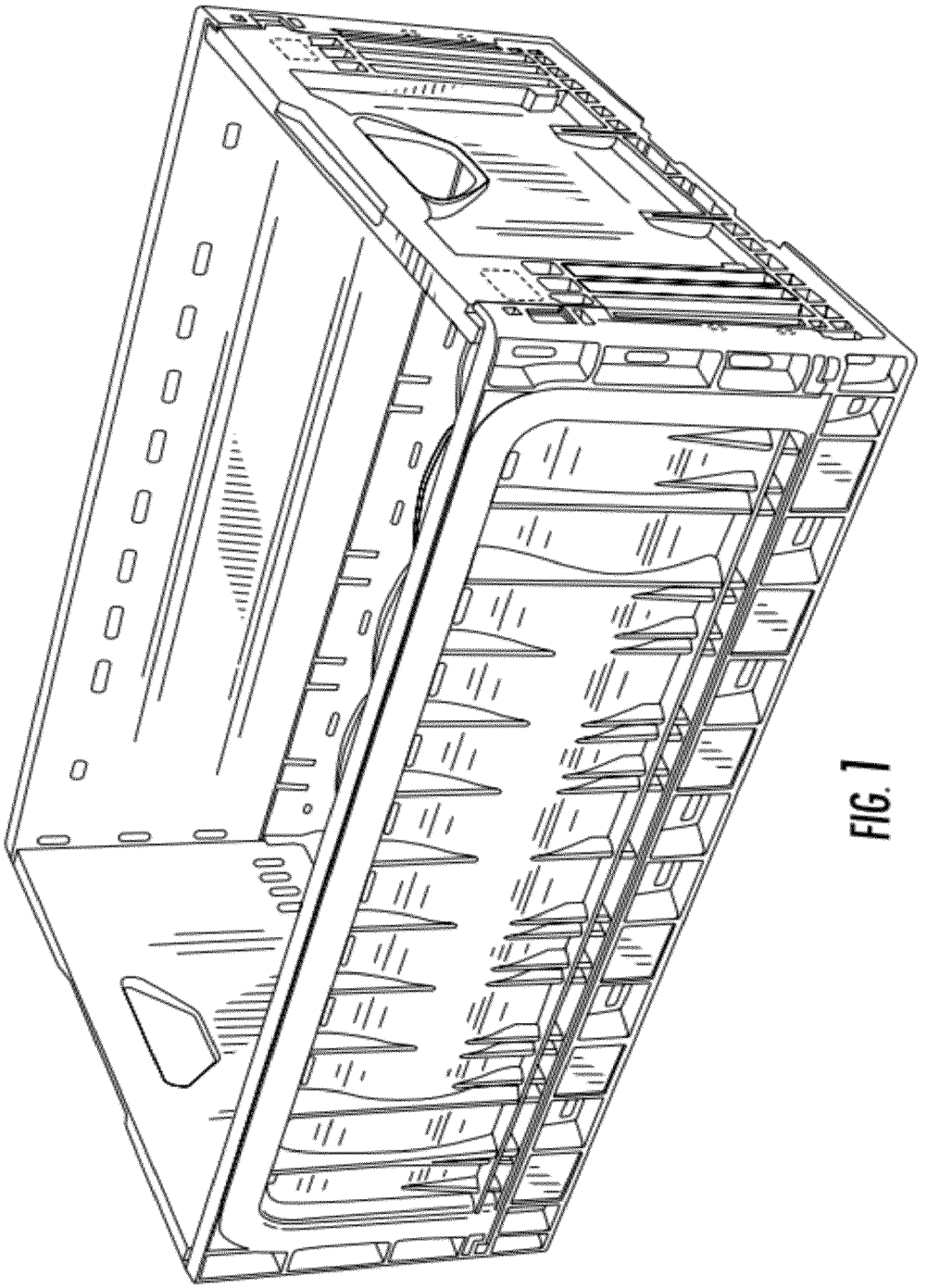

FIG. 1

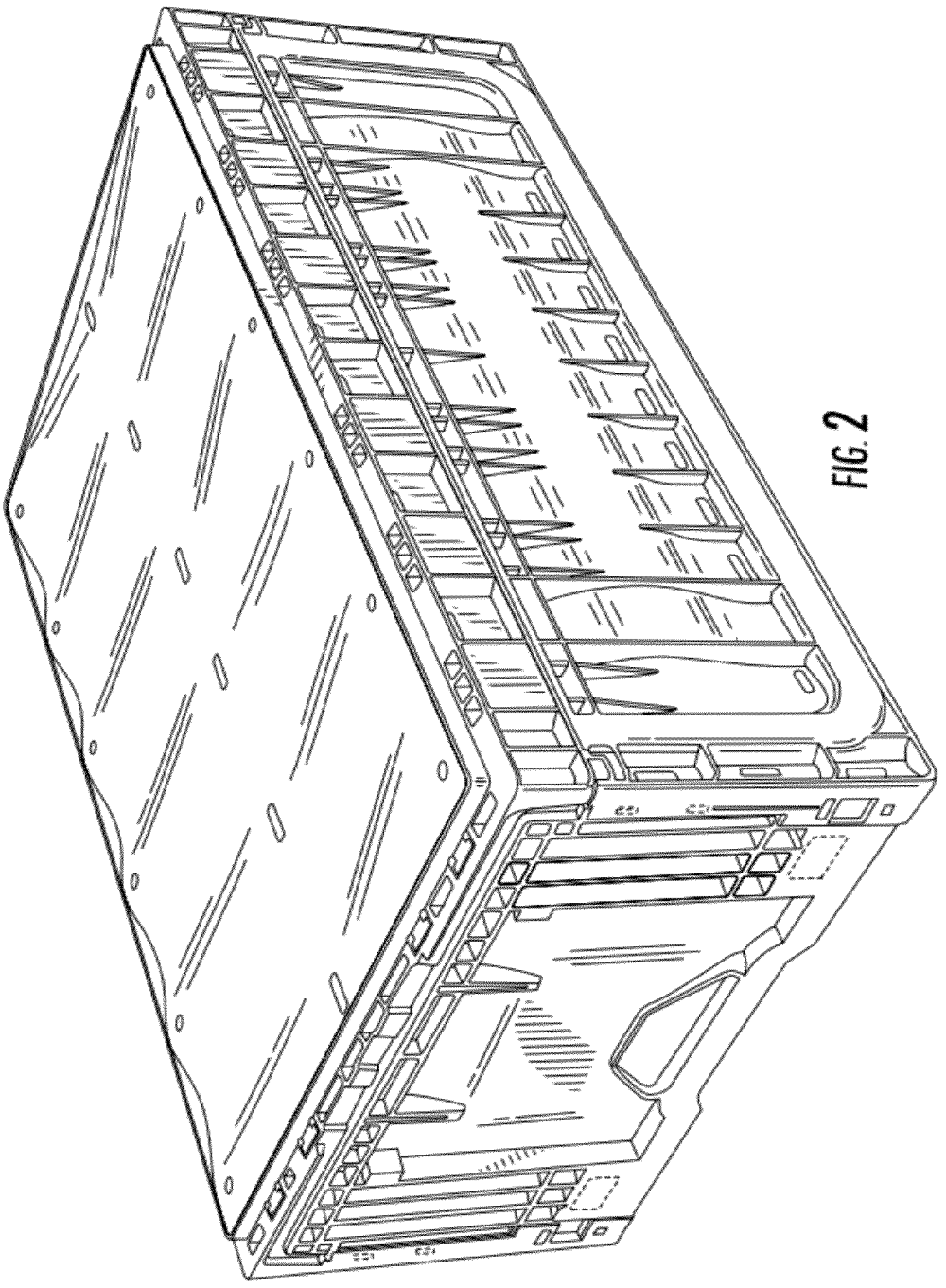

FIG. 2

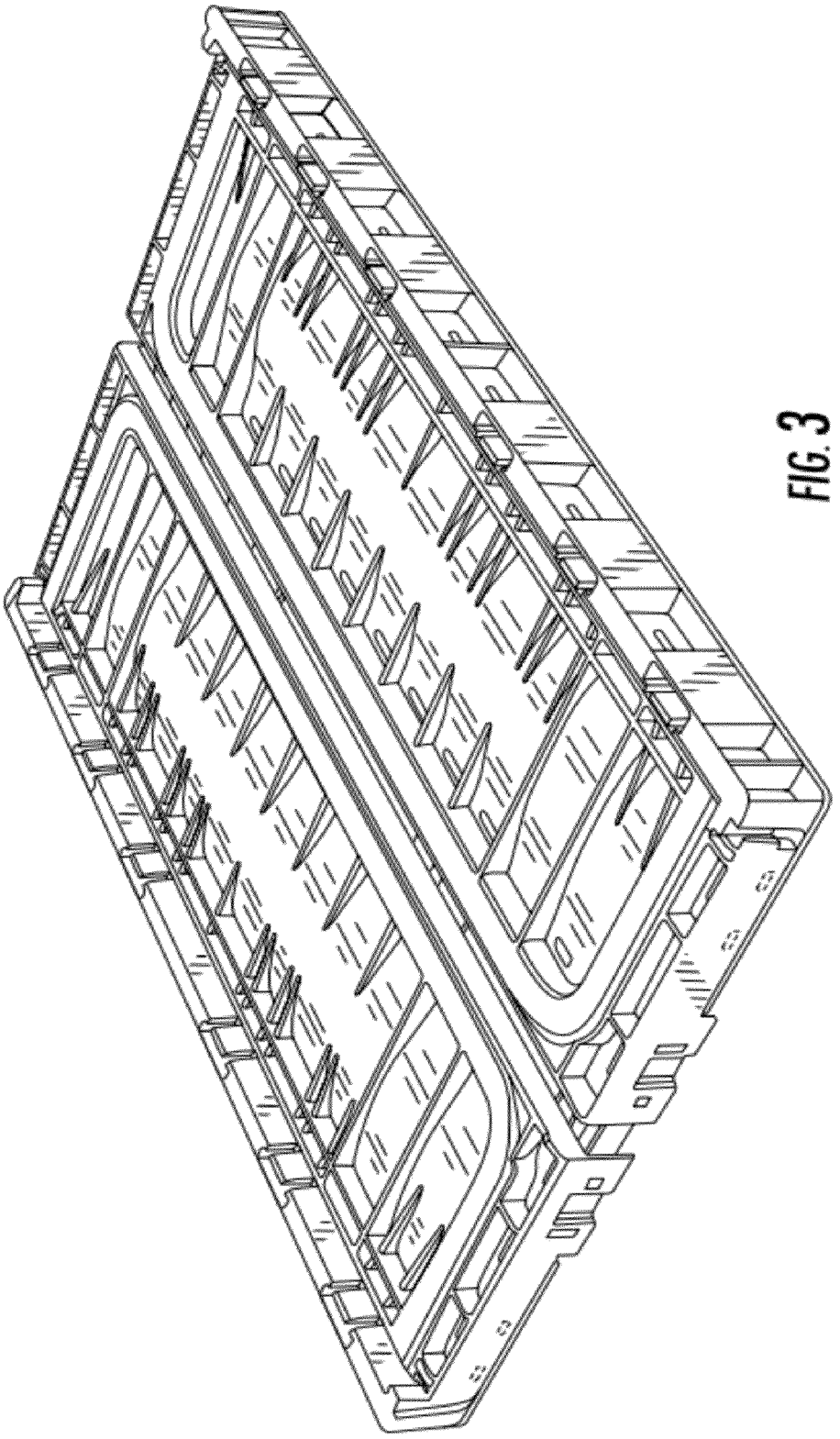

FIG. 3

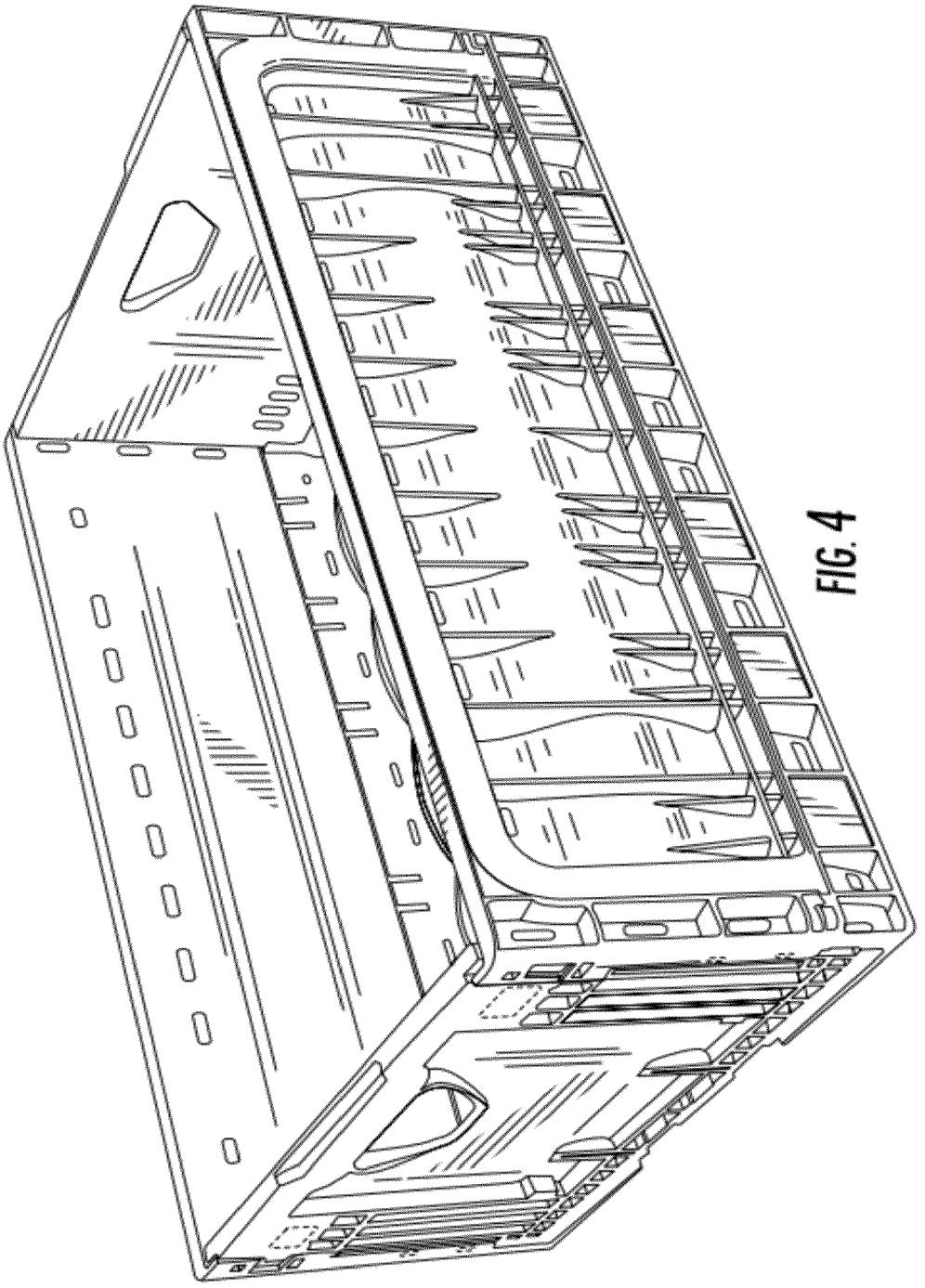

FIG. 4

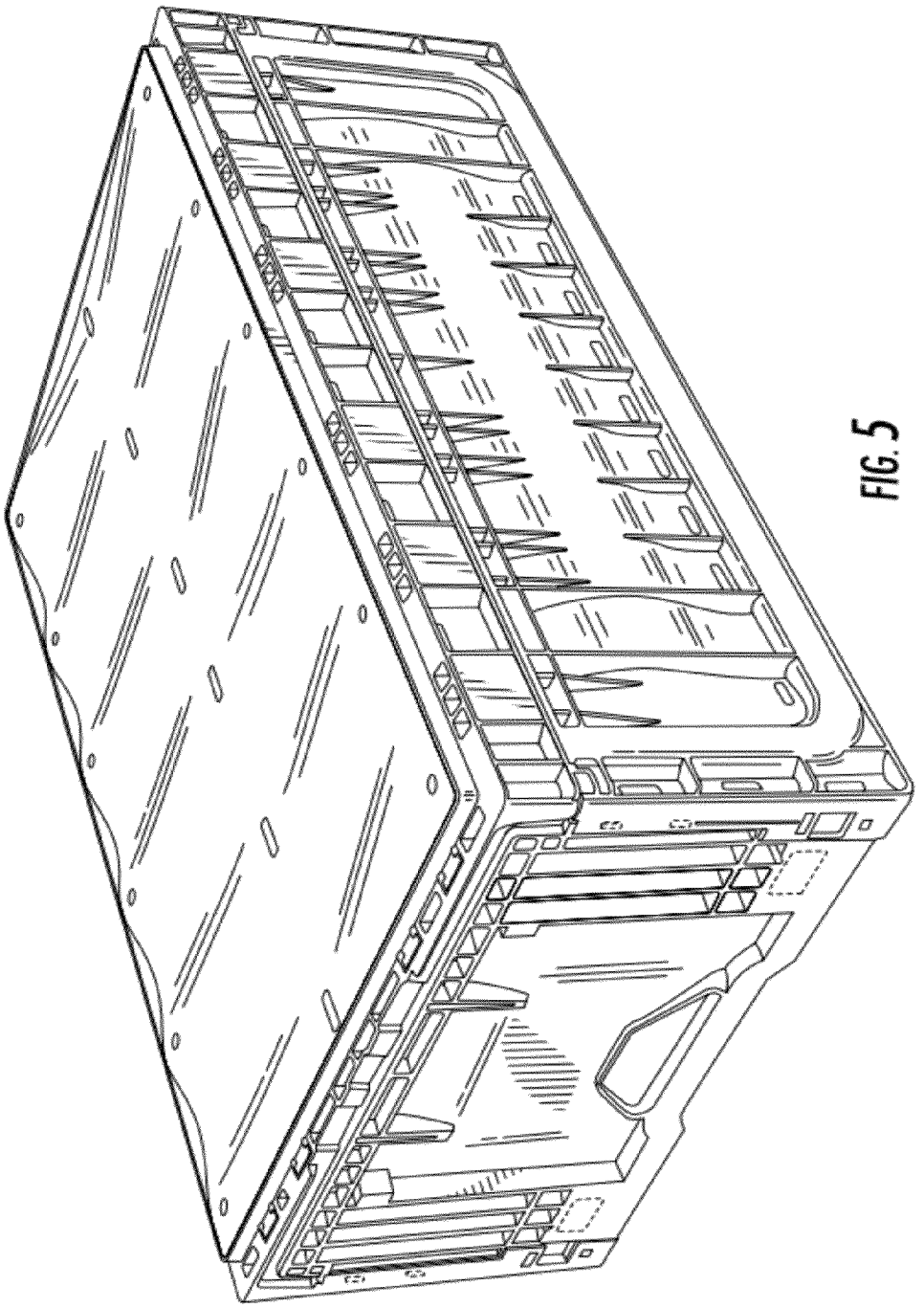

FIG. 5

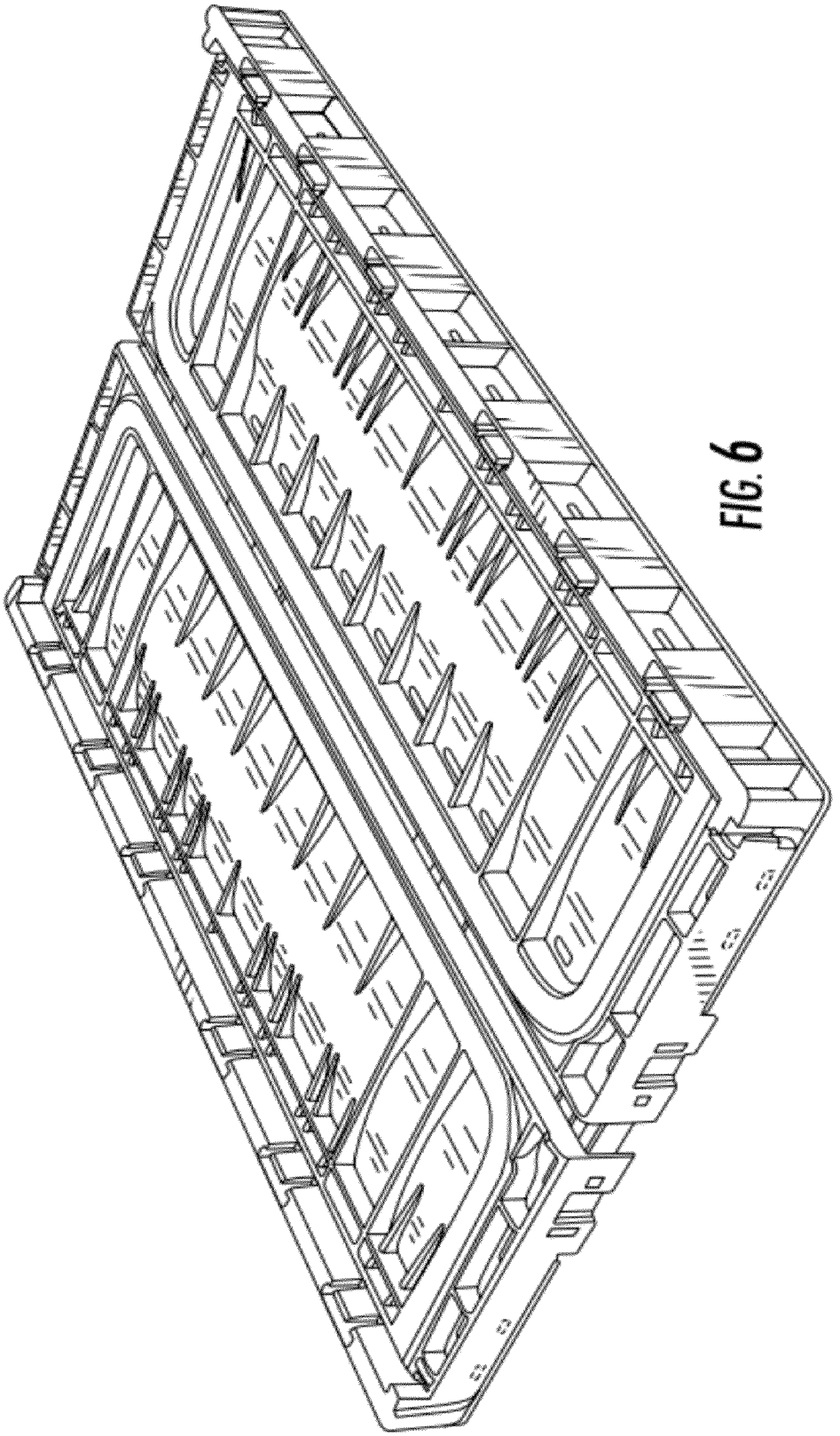

FIG. 6