H. C. PHIPPS.

MILK CAN CLOSURE.

APPLICATION FILED OCT. 27, 1913.

1,113,479. Patented Oct. 13, 1914.

Fig. 1.

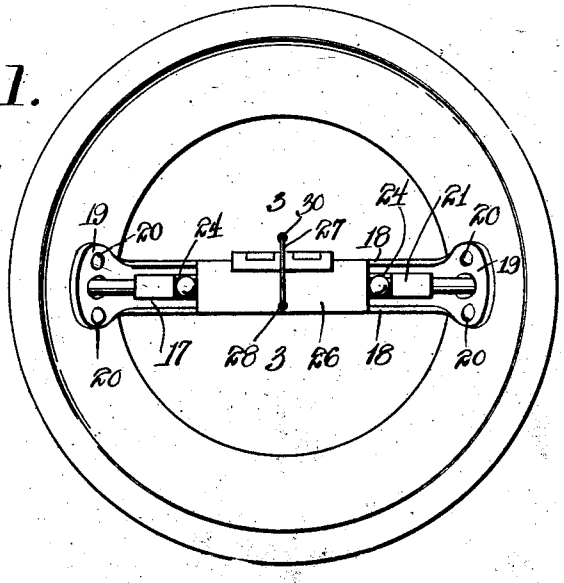

Fig. 2.

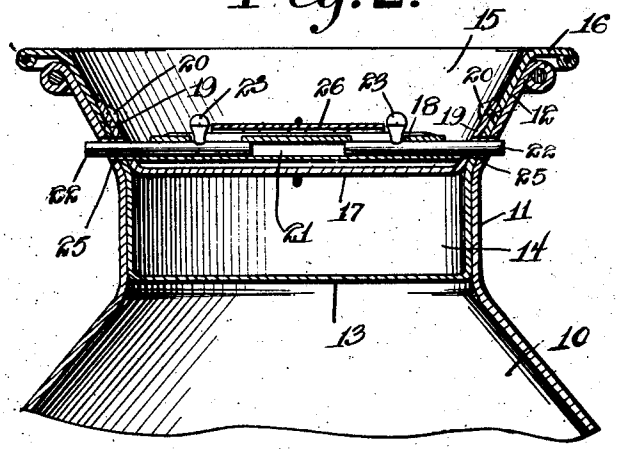

Fig. 3.

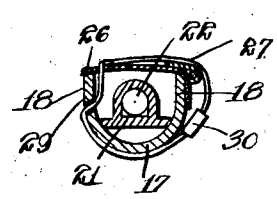

Witnesses

Wm. H. Mulligan.

Ross J. Woodward

Inventor

Henry C. Phipps,

By Richard Berwen,

his Attorney

UNITED STATES PATENT OFFICE.

HENRY C. PHIPPS, OF FREMONT, NEBRASKA.

MILK-CAN CLOSURE.

1,113,479. Specification of Letters Patent. Patented Oct. 13, 1914.

Application filed October 27, 1913. Serial No. 797,451.

To all whom it may concern:

Be it known that I, HENRY C. PHIPPS, a citizen of the United States, residing at Fremont, in the county of Dodge and State of Nebraska, have invented certain new and useful Improvements in Milk-Can Closures, of which the following is a specification.

This invention relates to an improved milk can closure and the principal object of the invention is to provide a closure which may be held in a locked position, the lock being so constructed that the closure cannot be removed from the can without the sealing wire being broken.

Another object of the invention is to provide an improved means for holding the locking bolts in an extended position.

Another object of the invention is to provide a locking device which can be easily connected with standard cans thus permitting the lock to be connected with cans already in use.

Another object of the invention is to provide a lock which will be simple in construction and thus cheap to manufacture.

This invention is illustrated in the accompanying drawings wherein:—

Figure 1 is a top plan view of a cap closure provided with the improved locking means; Fig. 2 is a vertical sectional view through the upper portion of a milk can with the closure locked in place; Fig. 3 is a sectional view taken along the line 3—3 of Fig. 1.

The milk can 10 is provided with a neck 11 having a flared mouth 12. This can is similar in construction to cans now on the market and it will thus be seen that it will not be necessary to provide an especially constructed can when using this invention. The closure for the can is also of the general type now in use and comprises the bottom 13 from which there extends the walls 14 which are flared as shown at 15 and have their outer edge portions 16 carried across the upper edge of the flared mouth 12. The locking device has been shown in connection with a milk can of this specific type but it is obvious that the locking device could be connected with cans having modified construction and that it could be used in connection with cans for holding other substance except milk. The principal use, however, to which it will be put is in connection with milk cans so that the cans may be locked, thus preventing people from tampering with the milk during shipment.

The locking device comprises a body portion 17 which is formed from a strip of sheet metal which has its side portions bent upwardly to form longitudinally extending side walls and has its end portions bent upwardly to form ears 19 through which rivets 20 are passed to securely connect the body portion with the can closure. A tubular housing 21 is rigidly mounted in the body portion and extends longitudinally thereof with its end terminating adjacent the ears 19. Locking bolts 22 are slidably mounted in the housing 21 and are provided with operating knobs 23 which extend through slots 24 so that the bolts may be moved longitudinally in the housing and held in an extended position with their outer end portions extending through the openings 25. These openings 25 are formed in the can neck and can closure and it will thus be seen that when the bolts pass through the openings that the can closure will be securely held in the neck thus preventing the closure from being removed. A plate 26 is hinged to one of the side walls 18 and is of such length that when the bolts are in the extended position, it may be moved to a lower position as shown in Figs. 1 and 2, with its ends in close engagement with the knobs 23 thus preventing the bolts from being moved out of an extended position. A sealing wire 27 is passed through openings 28 and 29 formed in the plate 26 and body portion 17 and has its end portions connected by a lead 30. It will thus be seen that when the plate 26 has been lowered, the can closure will be securely held in place by the bolts 22 and that these bolts can not be moved out of their extended position without raising the plate 26. This plate is held in closed position by the leaded wire and therefore the contents of the can cannot be tampered with without this fact being shown, since the wire must be broken before the plate can be raised.

What is claimed is:—

1. A receptacle provided with a neck, a closure fitting into the neck of said receptacle, and a locking device carried by said closure and comprising a body portion formed from a strip of sheet material having its side portions bent upwardly to form side walls and having its end portions bent upwardly to form attaching ears, means for rigidly

connecting said attaching ears with said closure, a tubular housing extending longitudinally in said body portion and provided with slots, locking bolts slidably mounted in said housing, operating means carried by said bolts and passing through said slots whereby said bolts may be moved in said housing to cause their outer ends to extend through alined openings formed in said closure and the neck of said receptacle, a plate hinged to one of the side walls of said body portion and fitting between the operating means of said bolts when said bolts are in an extended position, and means for sealing said plate in a lowered position.

2. A receptacle, a neck for said receptacle, a closure carried by said neck, and a locking device comprising a body portion rigidly secured to said closure, locking means slidably mounted in said body portion and passing through alined openings formed in said closure and neck when in an extended position to hold said closure in engagement with said neck, operating means for said locking means, a plate pivotally connected with said body portion and fitting between said operating means to releasably hold said locking means in an extended position, and means for sealing said plate in a closed position.

3. A device of the character described comprising a receptacle, a closure for said receptacle and a locking device for said closure comprising a body portion, locking means slidably mounted in said body portion positioned in longitudinal alinement, operating means for moving said locking means to an extended position whereby the locking means will extend through openings formed in said closure and receptacle, and means carried by said body portion and fitting between said operating means to hold said locking means in an extended position.

4. In a device of the character described comprising a receptacle, a closure for said receptacle, locking means slidably connected with said closure and passing through the closure to engage the said receptacle when in an extended position, operating means for said locking means, and sealing means positioned between said operating means for holding said locking means in an extended position.

5. A receptacle provided with a neck and a closure fitting into the neck of said receptacle, and a locking device carried by said closure and comprising a body portion, a tubular housing extending longitudinally of said body portion and provided with slots, locking means slidably mounted in said housing, operating means carried by said locking means and passing through said slots whereby said locking means may be moved in said housing to cause their outer ends to extend through alined openings formed in said closure and the neck of said receptacle, an abutment movably connected with said body portion and fitting between the operating means of said locking means when said locking means are in an extended position, and means for removably holding said abutment in an operative position.

6. A locking device for the purpose described comprising a body portion locking means slidably carried by said body portion and extending beyond opposite end portions thereof when in an operative position, operating means for said locking means, an abutment movably connected with said body portion and fitting between said locking means to releasably hold said locking means in an extended position, and means for releasably holding said abutment in an operative position.

In testimony whereof I affix my signature in presence of two witnesses.

HENRY C. PHIPPS.

Witnesses:
ANN E. SWAILS,
VICTOR SEITZ.