Dec. 9, 1952 E. A. WAHL ET AL 2,620,961

CARTON FLAP OPENER

Filed Dec. 21, 1951 2 SHEETS—SHEET 1

Fig. 1.

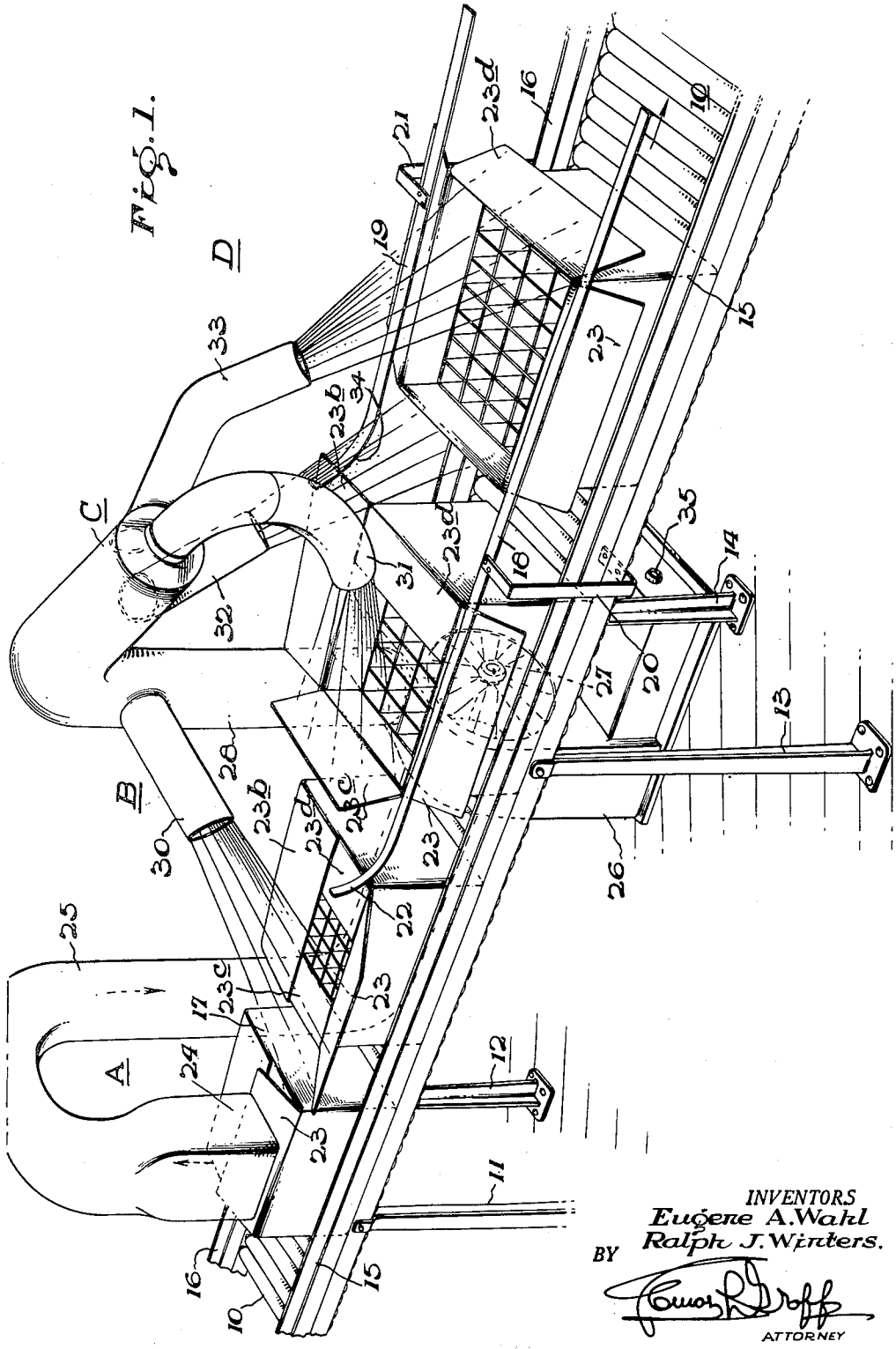

INVENTORS
Eugene A. Wahl
Ralph J. Winters.
BY
ATTORNEY

Dec. 9, 1952 E. A. WAHL ET AL 2,620,961

CARTON FLAP OPENER

Filed Dec. 21, 1951 2 SHEETS—SHEET 2

Fig. 2.

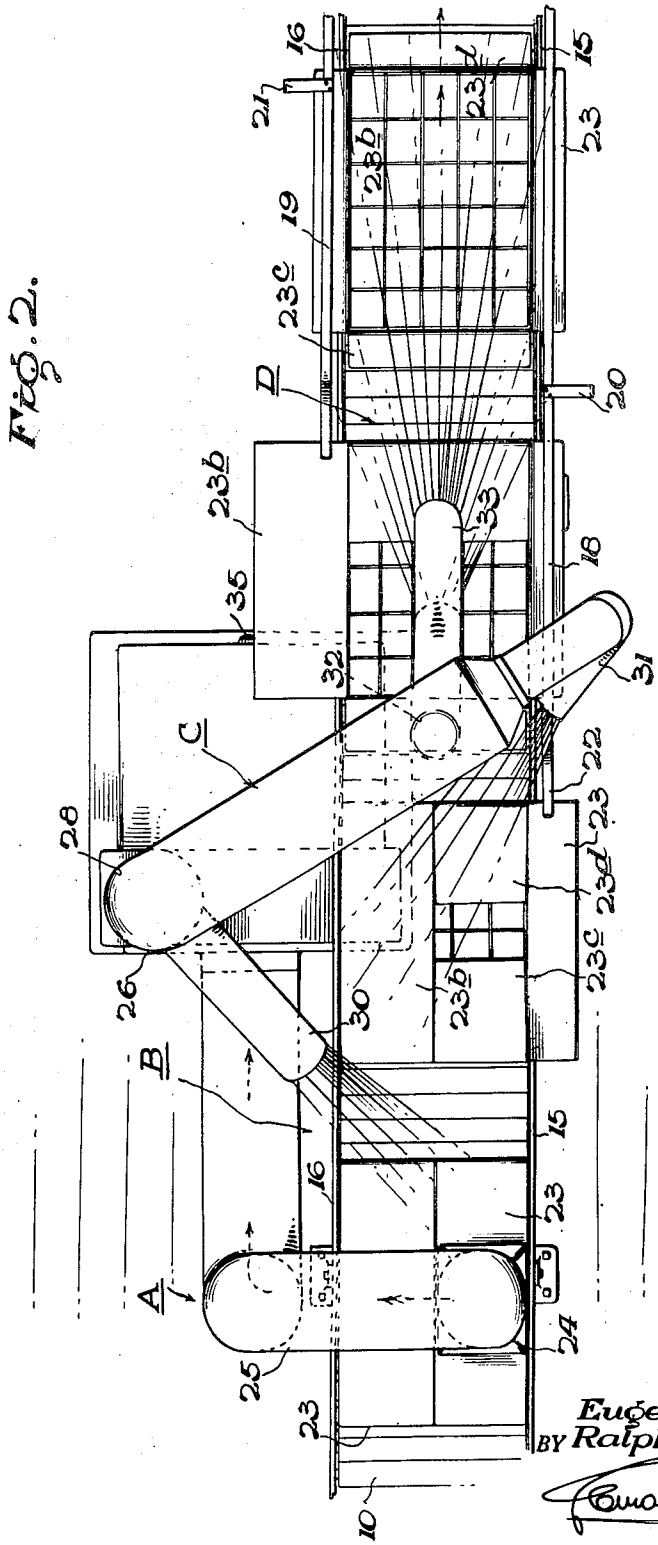

INVENTORS
Eugene A. Wahl
BY Ralph J. Winters.

Edmund L. Wolff
ATTORNEY

Patented Dec. 9, 1952 2,620,961

UNITED STATES PATENT OFFICE

2,620,961

CARTON FLAP OPENER

Eugene A. Wahl, Glen Ridge, and Ralph J. Winters, Nutley, N. J., assignors to P. Ballantine & Sons, Newark, N. J., a corporation of New Jersey

Application December 21, 1951, Serial No. 262,806

4 Claims. (Cl. 226—129)

1

The present invention relates generally to a method and apparatus for inspecting the interior and/or contents of cartons, or for filling and emptying cartons, and more particularly to a method and apparatus for unfolding the carton flaps from folded closed position to unfolded open position to automatically have access to the interior of the carton for any desired purpose.

Heretofore attempts have been made to provide mechanical means for unfolding carton flaps. However, the prior art developed for this purpose is not entirely mechanical as the flaps must be initially unfolded manually and are then held open by flap spreaders, until inspection is completed. Also such prior art is primarily for dumping the carton contents and the actual flap opening is usually done by inverting the carton and depending upon the weight of the contents to force open the flaps.

An object of the present invention is to provide the method of unfolding loose carton flaps from closed folded positions by fluid pressure.

Another object is to provide a novel arrangement of apparatus for conveying cartons through various pressure zones to unfold the folded closed flaps of cartons, formed of cardboard or any other material, such as plastic, metal or wood which might be formed with such loose flaps.

A further object is to provide in combination with a carton conveyor, a single blower adapted to provide both air suction and air blast conditions above the carton flaps in the proper order to unfold and open out the carton flaps as the cartons are progressively fed forward by the conveyor to a suitable inspection station.

The above and further objects and advantages of the present invention will appear more fully from the following detailed description in which one form of apparatus for practicing the same is described and illustrated in connection with the accompanying drawings.

In the drawings:

Figure 1 is a side perspective view of one form of apparatus including a conveyor and the carton flap opening mechanism.

Figure 2 is a top plan view of the apparatus of Figure 1.

Referring to the drawings in detail and first with reference to Figure 1, there is illustrated a conveyor 10. The conveyor may be of any desired construction, such as of the roller type shown or of the endless belt type and is preferably power driven. Several supporting legs 11, 12, 13 and 14 are provided on each side of the conveyor. The bed of the conveyor is bordered

2

along each longitudinal side thereof by guide rails 15 and 16 between which the cartons 17 are progressively conveyed through a suction zone A, and a plurality of longitudinally spaced apart air blast zones B, C and D. The final zone E is the inspection zone or operating zone as at this position of the carton, the flaps are completely unfolded into open position.

Assisting the air blast stations with their flap opening work are elongated flap turning and hold down bars 18 and 19, respectively. The bar 18 is longer than bar 19 so as to have priority of operation over bar 19. The bar 18 is supported in a plane above the top edge of the guide rail 15 by a U-shaped bracket 20. The leading end of the flap turning bar 18 is curved upward with respect to the conveyor and the convex part of the curved end serves as a flap control cam 22. The cam end 22 forces the first suction raised and opened side flap 23 at station B to swing over and down to the side of the carton as it reaches station C. The flap 23 at station A before arriving at station B is boosted from folded closed position to a partially open position by a rectangular suction hood 24. The hood 24 is formed as a part of the gooseneck conduit 25, which is connected to the side of a housing 26 at the air intake or suction side of a blower and thus will by suction elevate the flap 23 over which the hood 24 is positioned. In the mouth of the suction hood or nozzle 24 is a screen not shown, to prevent any part of the carton flap from being sucked in at this point and thus causing the carton to get caught therein.

The air exhaust of the blower flows out of the housing 26 through an exhaust conduit 28 opened to the exhaust side of the blower 27. The exhaust conduit is curved above and over the conveyor 10 into a manifold arrangement, see Figure 2. For example, a plurality of air blast tubes curved and angularly turned so as to position their respective outlet nozzles 30, 31, 32 and 33 at predetermined angles with respect to the carton flaps lead off from the conduit 28. First, the nozzle 30 at station B provides the means for blowing open the carton flap 23 from its partial suction raised position at station A; second, the rearwardly and angularly curved nozzle 31 provides the means for blowing open the other opposite side flap 23b and the trailing end flap 23c at station C and the blast nozzle 32 at this same station blows open the leading end flap 23d. As the carton 17 is advanced on the conveyor from station B the side flap 23 is held down in its swung open position by the turning bar 18 for

the balance of the conveying action through the inspection station D. As the carton leaves station C with the flaps **23**, **23***b*, and **23***c* swung open, the cam surface **34** of the curved end of flap turning bar **19** similarly forces the opposite side flap **23***d* down toward the exterior side of the carton and the air blast from nozzle **32** holds the trailing end flap **23***c* in swung down open position, while simultaneously opening the leading end flap **23***d*. The field of action provided by the nozzle **33** extends for a distance of several feet at station D, thereby permitting ample time for inspection of bottles or any contents in the carton. From the inspection station D the carton **17** is allowed to either proceed to the bottlehouse or to a sorting station, not shown.

When it is desired to start the apparatus, the blower **27** may be powered from a suitable source of electric energy, not shown, and controlled by a push-button switch **35**, see Fig. 1.

Without further description, it is believed that the present method and the particular embodiment illustrated and its operation are clear and it is to be expressly understood that while only one embodiment is shown for practicing this invention, there are numerous variations possible in the arrangement, combination and construction of the parts, which now may occur to those skilled in the art, and which may be made without departing from the scope of the invention.

Reference should be had to the appended claims for a definition of the limits of the invention.

We claim:

1. Apparatus for unfolding the folded closed flaps of unsealed cartons comprising a conveyor, a blower mounted adjacent a side of the conveyor, said blower having a housing supporting and journalling the blower for rotation in the housing, an air intake opening in the housing at the intake of the blower, an air exhaust opening in the housing adjacent the exhaust side of the blower, an air intake conduit formed with a rectangular suction head connected to the said air intake opening, an air exhaust conduit connected to the said air exhaust opening, said suction conduit being curved over the surface of the conveyor at the forward intake end thereof, and a plurality of carton flap unfolding air exhaust nozzles so positioned, so shaped and curved as to overhang the said conveyor at spaced apart positions along the length thereof.

2. Means for unfolding carton flaps to an opened out position, comprising a traveling conveyor bed for conveying cartons with unsealed folded cover flaps, a blower housing having an air intake opening, an air exhaust opening, a blower rotatably mounted on a power-driven shaft transverse the housing, said suction side of the blower being adjacent the air intake opening and said exhaust side of the fan being adjacent the air exhaust opening, a suction conduit connected to said housing around said air intake opening having a nozzle curved to overhang one side flap of a carton on the conveyor bed, an exhaust conduit curved to overhang the conveyor bed, and a plurality of blower tubes curved and directed downwardly to thereby blow open the carton flaps as a carton is conveyed forward by the conveyor bed.

3. Means for unfolding carton flaps to an opened out position, comprising, a traveling conveyor bed for conveying cartons with loosely folded over flaps, a fan housing having an air intake opening an air exhaust opening, a fan rotatably mounted on a power-driven shaft transverse the housing, said suction side of the fan being adjacent the air intake opening and said exhaust side of the fan being adjacent the air exhaust opening, a suction conduit connected to said housing around said air intake opening having a nozzle curved to overhang one side flap of a carton on the conveyor bed, an exhaust conduit curved to overhang the conveyor bed, a plurality of blower tubes curved and directed downwardly to thereby blow open the carton flaps as a carton is conveyed forward by the conveyor bed, and flap turning means mounted on each side of said conveyor bed adapted to retain some of said flaps in folded open positions.

4. The means for unfolding carton flaps described in claim 3, wherein the flap turning means comprise elongated bars curved at each leading end to form a cam surface, said cam surface of each bar being longitudinally spaced on opposite sides of the conveyor whereby one cam surface has carton flap turning priority over the other as a carton is conveyed past each cam surface.

EUGENE A. WAHL.
RALPH J. WINTERS.

REFERENCES CITED

The following references are of record in the file of this patent:

UNITED STATES PATENTS

Number	Name	Date
460,093	Purvis	Sept. 22, 1891
2,353,736	Le Frank	July 18, 1944

FOREIGN PATENTS

Number	Country	Date
470,575	Germany	Jan. 18, 1929