Jan. 5, 1937. T. R. GAUTIER 2,066,617

GUMMED TAPE DISPENSING MEANS

Filed March 24, 1936 2 Sheets-Sheet 1

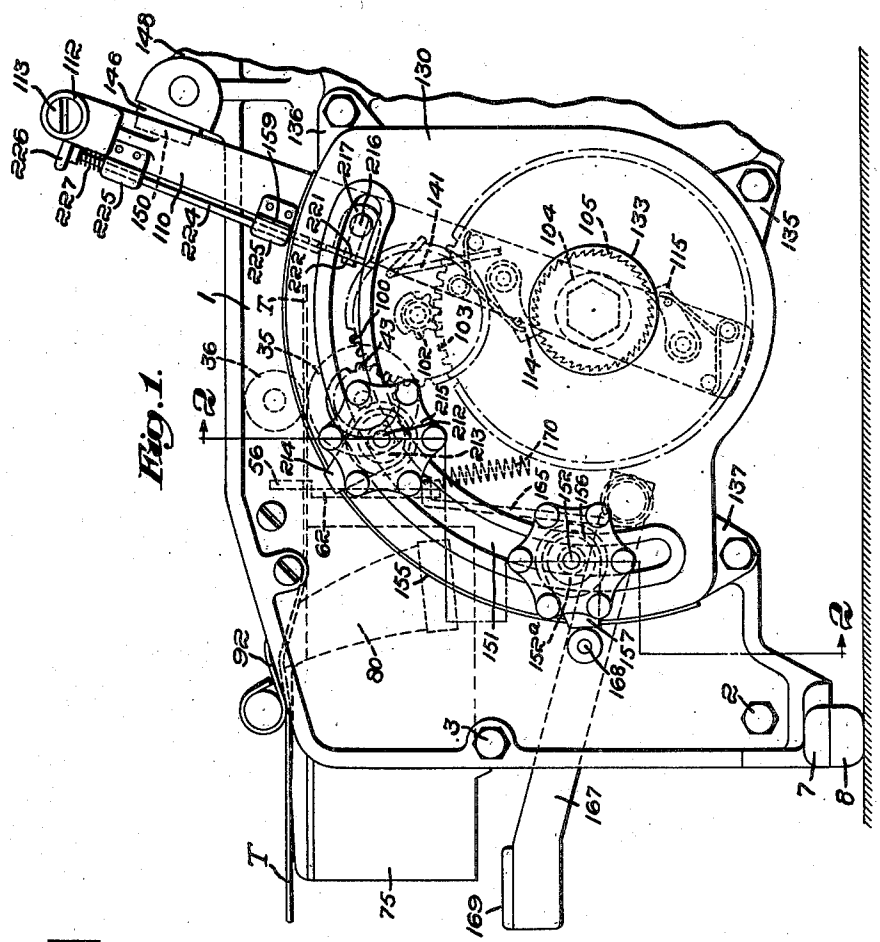

Fig. 1.

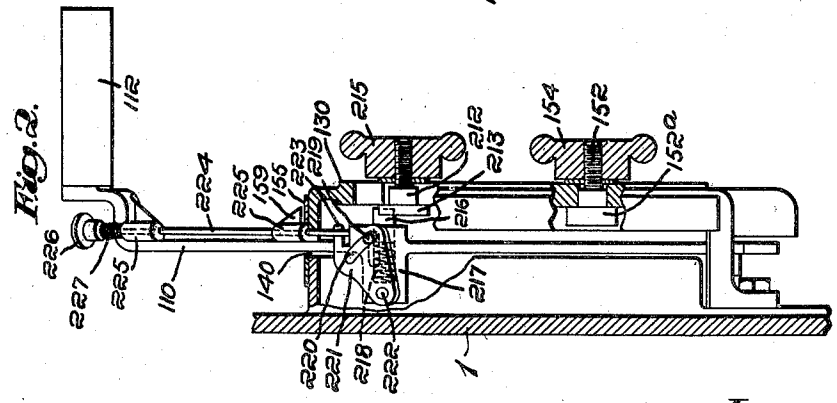

Fig. 2.

Inventor:
Trevor R. Gautier,
by Emery Booth Townsend & Miller
Attys

Jan. 5, 1937. T. R. GAUTIER 2,066,617

GUMMED TAPE DISPENSING MEANS

Filed March 24, 1936 2 Sheets-Sheet 2

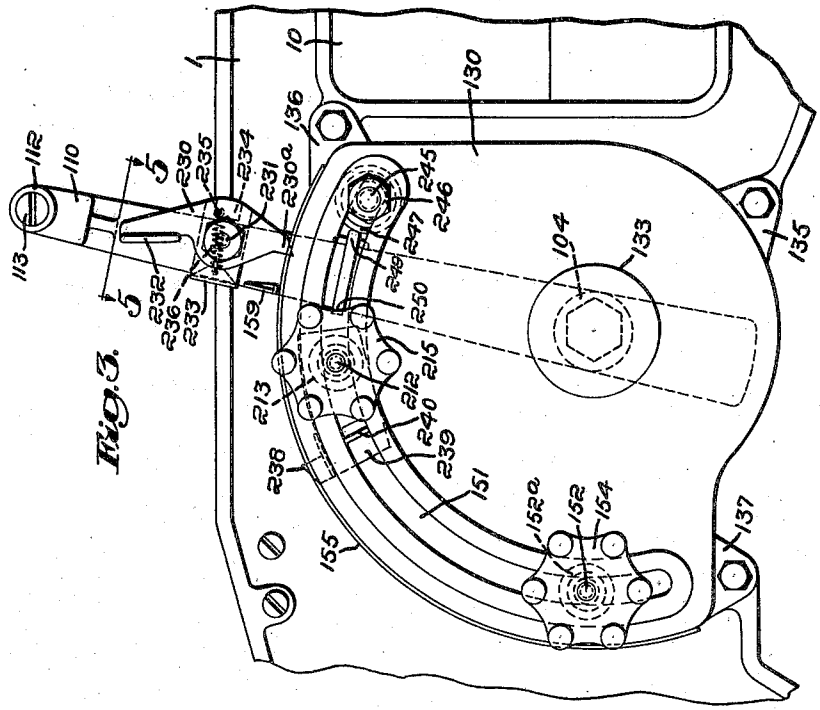

Fig. 3.

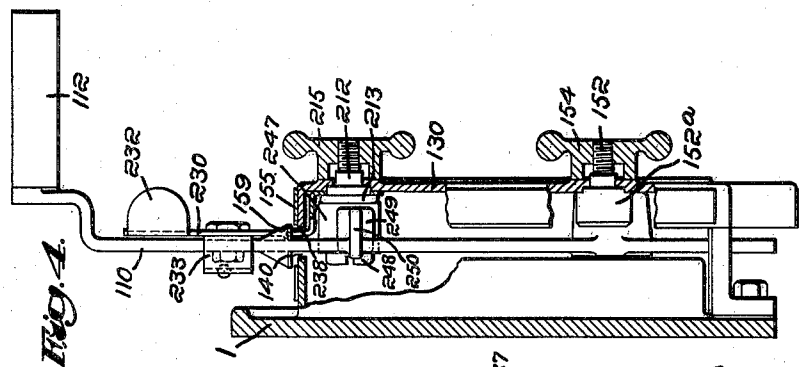

Fig. 4.

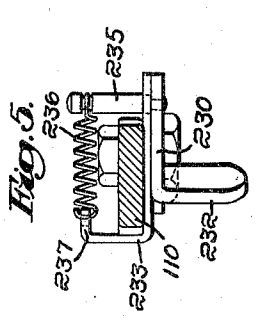

Fig. 5.

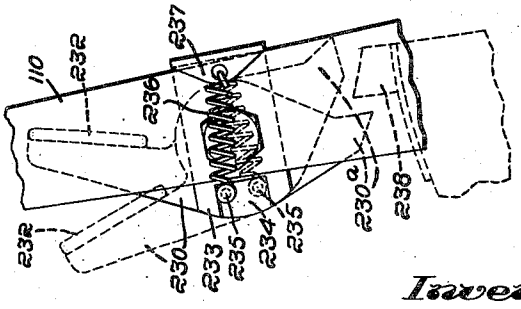

Fig. 6.

Inventor:
Trevor R. Gautier.
By Emery, Booth, Townsend, Miller & Wilson
Attys

Patented Jan. 5, 1937 2,066,617

UNITED STATES PATENT OFFICE

2,066,617

GUMMED TAPE DISPENSING MEANS

Trevor R. Gautier, Nashua, N. H., assignor to Nashua Gummed and Coated Paper Company, Nashua, N. H., a corporation of Massachusetts

Application March 24, 1936, Serial No. 70,654

8 Claims. (Cl. 271—2.4)

The present invention relates to means for dispensing gummed tape, as for package sealing, wrapping and similar purposes, and more particularly aims to provide in a device of the class referred to improved tape feeding and control means in conjunction with other features whereby the operator, such as a packer in a shipping room, may readily obtain lengths of tape or strip material, in the desired different lengths, in moistened condition for application to a package, shipping container or the like.

This application is a continuation in part of my copending application Serial No. 700,235, filed November 29, 1933.

In the drawings, illustrating by way of example certain embodiments of the present invention,

Fig. 1 is a right side elevation of the front portion of one form of machine in accordance with the invention;

Fig. 2 is a partial vertical section substantially on the line 2—2 of Fig. 1;

Fig. 3 is a partial right side elevation, corresponding to Fig. 1, showing a further embodiment of the invention;

Fig. 4 is a cross-sectional view illustrating the feed control means of Fig. 3;

Fig. 5 is a section on the line 5—5 of Fig. 3; and

Fig. 6 is an enlarged detail view looking at the opposite face of the feed lever from that seen in Fig. 3, and illustrating two positions of the switch detent.

As herein illustrated, the machine as a whole is housed in a suitable framing, herein including spaced side frames, the right side frame being indicated at 1, Figs. 1 and 2, these members being removably connected as by the tie rods two of which are indicated at 2 and 3. The housing may be equipped with supporting feet 7 desirably provided with rubber or other cushioning members 8.

At the rear portion of the machine the side frames provide between them a well or chamber 10 (see Fig. 3) for the tape supply or roll. The tape T from the roll supply is conducted forwardly between and by means of lower and upper pinch feed rolls or wheels 35 and 36, as seen in dotted line in Fig. 1. The lower feed wheel is adapted to be driven, for feeding the tape forwardly to and past the severing and the moistening means, as by means of a pinion 43 on the same shaft with the lower feed wheel and meshing with an intermediate gear 100 having fixed to it a relatively small pinion 102 in turn meshing with a comparatively large spider or ring gear 103 on a stud 104 and carrying ratchet disc 105.

The operating element proper for the feed means comprises a lever 110 rockable on the stud 104. The lever is provided at its upper end with an operating handle 112 removably secured to it as by the screw-headed pin 113. The operating lever has a one-way or free-wheel connection with the large gear 103. Such connection may be of any suitable type, as for example a Horton clutch, and I have herein shown for the purpose the spring-pressed pawls 114, 115 pivoted on the operating lever 110. The described gearing and the lower feed roll desirably are proportioned and related in such way that movement of the feed lever 110 through a comparatively short arc is effective to feed easily and rapidly the maximum desired lengths of tape, for example, up to thirty inches or more. At the same time the machine retains the capacity to serve accurate shorter lengths, thus providing a practical all-purpose high speed counter and shipping room machine which as a whole is of relatively small size and weight having in consideration the rapidity of feed and lengths of tape available, as more fully described in my copending application.

The severing or cut-off mechanism for the tape as herein illustrated in Fig. 1 includes a fixed member or blade 56 extending transversely above the tape path and cooperable with the pivoted blade or knife 62 which normally lies below the path of the tape.

One means for operating the tape knife as herein shown comprises a link 165 having its upper end connected with the movable blade and its lower end fastened to the inner end of a cut-off lever 167 pivoted as at 168 upon the adjacent side frame 1. This lever is extended forwardly to a point convenient to the hand of the operator and is provided with an operating piece 169 whereby it may readily be depressed. The movable knife 62 is normally held down, and the operating end of the cut-off lever 167 consequently up, as by means of a coil spring 170. The cut-off lever 167 is constructed and arranged in relation to the feed lever 110 so that as the operator completes a forward or feeding stroke his hand comes conveniently adjacent the operating piece 169 of the cut-off lever and the latter may be engaged and depressed, if the desired tape length has been obtained, without necessitating the operator to shift his hand from the feed lever

handle and substantially as a continuation of the tape feeding movement of his hand or arm.

Forwardly of the severing means the tape is conducted past suitable moistening means which may include a wick, roller, brush or other moistening device. As in the parent application, the illustrated machine is equipped with a reservoir or tank 75 removably supported as upon the upper cross-bolt 3. A capillary moistening element or brush 80 is positioned in the reservoir with its free end projecting upwardly to the tape path, for moistening engagement with the under face of the advancing tape. The latter is guided across the brush in moistening relation with it as by a fixedly positioned deflector or guide 92. The moistened tape is delivered from beneath this deflector, across the top of the reservoir, in readiness for use.

The operating mechanism for the feed means, including the gear train and the inner portion of the feed lever 110, is enclosed by a demountable housing or cover 130, having a hollow boss 133 enclosing the hub of the operating or feed lever. This cover is of general quadrant shape and is removably bolted against the side frame as by means of its attaching ears 135, 136 and 137. Within it is supported the return spring 141 for the feed lever. The inoperative or return stroke of the latter is limited by suitable stop means herein comprising a rubber or other buffer 146 on bracket 148 rising from the side frame 1, the buffer being positioned to abut a lateral projection 150 on the lever.

The feed lever 110 travels in a slot 140, see Fig. 2, provided between the upper arcuate wall of the quadrant cover 130 and a corresponding arcuate flange on the adjacent portion of the side frame. In some instances, particularly where the requirement is predeterminedly for maximum lengths of tape, the forward or maximum feed position of the lever may be determined by its engagement with the bottom end wall of the operating slot. But in order to obtain various selected intermediate lengths of tape, by setting the mechanism to supply such lengths, I desirably provide adjustable stop means associated with the feed lever. As herein illustrated the cover plate 130 is formed with an arcuate slot 151 slidably receiving a stud 152 having an inner end or head 152a positioned as a positive stop in the path of a detent 216 on the feed lever, as will later be described. The outer end of this stud is threaded to receive a nut 154 adapted to tighten the stop head 152a against the cover, thereby to hold it adjustably at any selected position along the arcuate slot. The advancing or tape feeding movement of the feed lever 110 thus is positively halted by the described adjustable stop means 152—154, at whatever point this stop is predeterminedly set, corresponding to the desired selected length of tape.

To assist the operator in arriving at known lengths of tape I desirably provide a scale 155, calibrated in units of tape lengths, for example, inches, and the stop may be provided with a setting pointer cooperable with the scale. As illustrated, such pointer herein comprises a separable element having a hub portion 156, Fig. 1, received on a flattened part of the stop stud 152, said pointer including an indicating portion or pointer proper 157 extending to a point adjacent or overlapping the graduated scale 155. The latter is shown as a separable strip on the arcuate flange of the cover plate 130, where it directly faces and may be readily viewed by the operator. Obviously also the scale whether graduated in inches or otherwise affords means whereby the operator may quickly determine at any instant during an actual feeding operation the particular length of tape which has been delivered past the severing means, and in this connection the leading edge or other part of the operating lever may be utilized as a pointer or indicator in connection with said index or scale 155, or the lever may conveniently be provided with a lateral projection or pointer 159 directly overlying the scale and moving along the latter during the feeding operation.

The described positive stop means provides for obtaining predetermined maximum tape lengths less than the extreme maximum available from a single operating stroke of the feed lever. It will be understood that where repeated lengths up to the single-stroke capacity of the machine are likely to be required, the stop 152 may be set at the extreme forward bottom end of the slot 151, or may be removed entirely. This adjustable positive stop 152, however, provides for but a single predetermined, although adjustable or variable length. Under some working conditions it is found desirable to be able to dispense optionally, at the will of the operator, either of two predetermined or set lengths of tape, whether alternately or in any plurality of one length followed by one or more of the other length. Of course any shorter length may be had at any time merely by use of the visual scale, the operator following the edge of the feed lever or its pointer 159 along the scale and halting the feed movement at the desired point. This requires special attention on the operator's part, however, so that he cannot give his entire attention at such time to other operations.

In accordance with the present invention I provide means for obtaining two or any desired plurality of predetermined or set lengths of tape, with capacity for shifting rapidly from any one length to another, in no usual or ordered sequence, which means may be employed either as a substitute for or together with the length-determining adjustable stop device previously described. Referring to the drawings, the initial or main stop and index elements 152 to 157, as previously described, are there shown together with one additional stop and pointer unit, comprising a pin 212, its head or stop 213, pointer 214 and tightening nut 215, all of similar construction as said parts 152 to 157, except that the stop 213 preferably is somewhat shorter than the stop 152a, extending a less distance into or across the path of the feed lever. It will be understood that any desired number of such stops may be provided within the structural limits of the mechanism.

In this instance the cooperating stop element upon the feed lever 110 is removably mounted, so that it may be rendered inoperative at any desired time. It comprises, see particularly Fig. 2, a slidable plunger or detent 216 in a housing or boss 217 on the lever. Said plunger is normally urged outwardly, to the right in Fig. 2, as by means of the coil spring 218. A pin 219 projects from the plunger, through a corresponding slot in the housing, and is engaged in an arcuate slot 220 in a dog 221 pivoted as at 222 on said housing or boss 217. The upper portion of said dog has a hook 223 engaging the lower end of a vertical push rod 224 slidably held, in general parallelism with the feed lever, in guides 225 on the latter. The push rod is extended upwardly to a point conveniently adjacent the han-

dle 112 of the feed lever, where it is provided with a head or finger piece 226 which is easily engageable by the thumb or other operation of the operator's hand while holding the feed lever handle. The push rod is normally held up in raised position as by means of the coil spring 227 between the head of the rod and the upper guide 225.

By merely depressing the push rod 224 the dog 221 is swung down, withdrawing the plunger 216 into its housing and out of the path of the supplemental stop 213 and of the others, if more than one is provided. As seen in Fig. 2 the lower or main stop 152a extends inwardly farther than the supplemental stop 213, and any additional stop may be of a corresponding graduated length, so that by depressing the push rod 224 to different extents the plunger may be withdrawn from active engagement with all of the stops or merely as to selected ones. Thus the operator is enabled to pass any stop, except the final stop 152a, at any instant he may desire to do so, readily shifting from one length of tape feed to another, or disregarding the stops entirely and feeding out measured lengths of tape by watching the progress of the lever or its pointers 159 or 160 along one or another of the scales and halting the feed at the length he wishes. If preferred, the arrangement may be such that even the final and adjustable stop corresponding to the member 152a may be passed at the operator's option, but generally it is found convenient to provide one final stop which will be effective whether or not the release rod 224 or other similar member is intentionally or otherwise manipulated.

In Figs. 3 to 6 I have illustrated a further embodiment of the invention. In said figures parts otherwise not referred to may be understood to be similar to those already described in connection with Figs. 1 and 2, like reference numerals indicating like parts. The feed length control means in this instance includes a pivoted detent, switch element or switch detent 230 rockably mounted on a stud 231 on the feed lever 110. This switch detent is provided with a finger piece 232 conveniently adjacent the hand of the operator as the latter engages the feed lever handle 112, and by means of which the detent may readily be rendered inoperative at any desired time. The detent is limited in its rocking movement, between two positions, as by means of a limiting yoke 233 supported on the pivot stud 231 and slotted at one end, at 234, Figs. 3 and 6, to receive a pin 235, see also Fig. 5, projecting laterally from the detent 230 and extending through this slot 234. A coil spring 236, for retaining the switch detent in one or the other of its positions such as illustrated in Fig. 6, has one end connected to the pin 235 and its other end secured to a lateral projection 237 formed on the limiting yoke 233. The spring 236 and its end supports are so arranged with respect to the pivot 231 of the switch detent that as the latter is moved from one position to the other the spring is caused to cross center and hence to retain the switch detent in either position. It will be understood that as the spring crosses center the switch detent will snap into and be held in the respective position.

When the switch detent is positioned as in Figs. 3 and 4 and in the full line showing in Fig. 6, it is in its operative or stopping position, for cooperation with an adjustable stop member 238, to be described. In its opposite or inoperative position, as illustrated by the dotted line showing in Fig. 6, the switch detent is out of line with the stop 238, thus allowing the feed lever 110 to be moved forwardly past the latter.

The adjustable stop 238 is formed on a plate 239 received beneath the head 213 of the adjustably positionable pin 212, the latter and its tightening nut 215 being similar to the corresponding parts shown and described in connection with Figs. 1 and 2. The plate is further held in position for guided adjustment along the arcuate slot 151 as by means of a projection 240 struck out from the plate and received in said slot. By loosening the nut 215 the stop 238 accordingly may be shifted to any desired position along the slot 151 and the scale 155. Hence it will be seen that the stop 238 and associated parts, in conjunction with the switch detent 230, similarly as in Figs. 1 and 2, afford means for obtaining predetermined adjustable intermediate lengths of tape, as compared with lengths fed by the use of a full forward stroke of the feed lever to the end of the slot 151 or to the stop 152—154 if the latter is employed. Assuming that the feed lever 110 is in an initial position as shown in Fig. 3, if now a length of tape corresponding to the set full feed stroke is desired, the operator merely tips the switch detent with his finger, by engaging the finger piece 232, sufficiently to allow the detent to clear the stop 238. On release of the feed lever on completion of the feed stroke, the lever is returned by its spring, the upper face of the stop 238 and the bottom face of the contact portion or finger 230a of the switch detent being inclined to permit the detent to yield against its spring and to ride back past the stop 238. Or if a succession of the longer tape lengths is desired the detent 230 may be quickly manipulated so that its spring snaps it into its inoperative position, as shown in dotted lines in Fig. 6, so that it is out of engaging relation with the stop 238. To return to a shorter length, the operator has but to switch or snap the detent back into its operative position as in Fig. 3 and in full line in Fig. 6. The described arrangement affords great flexibility and ease of manipulation in the selection of the different tape lengths corresponding to the adjustably and predeterminedly set position of the respective stops. It has the advantage, over the embodiment shown in Figs. 1 and 2, that the operator is not required to hold the movable or releasable element or switch detent 230 in one or the other of its operative positions whenever a succession of the same lengths of tape is desired. In this instance the operator has but to throw said element to one position or the other and it will then automatically remain in such position for any desired length of time, and in instant readiness to be shifted to the opposite position merely by movement of the operator's finger.

In the embodiment of Figs. 3 to 6 I have also illustrated an adjustable back stop for the feed lever comprising a stud 245 projecting through the slot 151 and adapted to be secured in fixed position as by means of the nut 246. At its inner portion the stud 245 carries a rubber or other bumper sleeve 247 removably held in place as by the screw 248. This adjustable stop bumper 247 is adapted to cooperate with a stop 249 formed as a lateral projection on the feed lever 110. The forward or left portion 250 of said projection constitutes a stop for cooperation with the adjustable finger or full stroke stop 152—154. Thus in said Figs. 3 to 6 I have provided three adjust-

able stop means, including the adjustable back stop 245, the adjustable full stroke or long length stop 152—154, and the adjustable and optionally inoperative intermediate length stop means 230—238. In some instances one or more additional intermediate and adjustable stops corresponding to the member 238 and its associated parts may be provided, similarly as described in the preceding figures, to afford additional intermediate lengths. Setting pointers corresponding to the members 157 and 214 of Figs. 1 and 2 may be used in connection with the construction illustrated in Figs. 3 to 6 if desired, although in the latter instance the stop element or elements 238 may themselves be utilized as pointers or indices to assist in predeterminedly setting them with relation to the graduated scale 155.

My invention is not limited to the particular illustrative embodiments herein shown and described, its scope being set forth in the appended claims.

I claim:

1. In a strip serving machine, in combination with a frame and a strip-roll support, means for engaging and feeding the strip, a reciprocating feed lever having a feeding movement and an opposite return movement between feeding and return limits, one or more stop elements in the path of the lever intermediate said limits, a stop-engageable member movably mounted on the lever and cooperable with said intermediate stop element or elements, and means carried by the lever for rendering said stop-engageable member inoperative at the will of the operator, whereby to feed different predetermined lengths of the strip material selectively.

2. In a strip serving machine, in combination with a frame and a strip-roll support, means for engaging and feeding the strip, a reciprocating feed lever having a feeding movement and an opposite return movement between feeding and return limits, a stop member in the path of the lever intermediate said limits, a stop-engageable member, one of said members being movable to and from operative position and one of them being on the lever and the other on a stationary part, and means for retracting said movable member from operative stopping relation with the other member, said means having an operating device readily actuatable by the operator's hand while on the feed lever, whereby to feed selectively different predetermined lengths of the strip material.

3. In a strip serving machine, in combination with a frame and a strip-roll support, means for engaging and feeding the strip, a reciprocating feed lever having a feeding movement and an opposite return movement between feeding and return limits, a stop member in the path of the lever intermediate said limits, a stop-engageable member, one of said members being movable to and from operative position and one of them being on the lever and the other on a stationary part, and means carried by the feed lever to release or prevent interengagement of said members, thereby to effect delivery of different predetermined strip lengths, at the will of the operator.

4. In a strip serving machine, in combination with a frame and a strip-roll support, means for engaging and feeding the strip, a reciprocating feed lever having a feeding movement and an opposite return movement between feeding and return limits, a stop member in the path of the lever intermediate said limits, a stop-engageable member, one of said members being movable to and from operative position and one of them being on the lever and the other on a stationary part, and a spring-loaded push rod located conveniently to the operator's lever-operating hand for selectively controlling the position of said movable member to condition it to engage or to avoid the other member, thereby selectively to vary the length of the strip to be.

5. In strip serving machine, in combination with a frame and a strip-roll support, means for engaging and feeding the strip, a reciprocating feed lever having a feeding movement and an opposite return movement between feeding and return limits, a stop member in the path of the lever intermediate said limits, a stop-engageable member, one of said members being movable to and from operative position and one of them being on the lever and the other on a stationary part, and a selecting element on the feed lever for affording a mutually operative or inoperative status for said members.

6. In a strip serving machine, in combination with a frame and a strip-roll support, means for engaging and feeding the strip, a reciprocating feed lever having a feeding movement and an opposite return movement between feeding and return limits, a stop member in the path of the lever intermediate said limits, and a member movably carried by the feed lever, said movable member having a portion adapted in one position of the movable member to make stopping engagement with said stop member, and said movable member having an operating portion for moving the member between said stopping position and an inoperative or non-stopping position thereof.

7. In a strip serving machine, in combination with a frame and a strip-roll support, means for engaging and feeding the strip, a reciprocating feed lever having a feeding movement and an opposite return movement between feeding and return limits, a stop member in the path of the lever intermediate said limits, and a stop-engageable member carried by the feed lever and movable relative thereto and to said stop member into active and inactive position selectively, and means automatically to retain said movable member in the selected position.

8. In a strip serving machine, in combination with a frame and a strip-roll support, means for engaging and feeding the strip, a reciprocating feed lever having a feeding movement and an opposite return movement between feeding and return limits, an adjustable stop member to define the feeding limit of the lever, a second adjustable stop member to determine the lever return limit, one or more stop members intermediate said limit stop members, an abutment member on the feed lever for cooperation with said intermediate stop member or members, and means to render said intermediate stop and abutment members relatively operative or inoperative at the selection of the operator.

TREVOR R. GAUTIER.