Aug. 15, 1967 F. W. CAMPBELL ET AL 3,336,179

GLASS REINFORCED ROOF SYSTEM

Filed Jan. 3, 1966 3 Sheets-Sheet 1

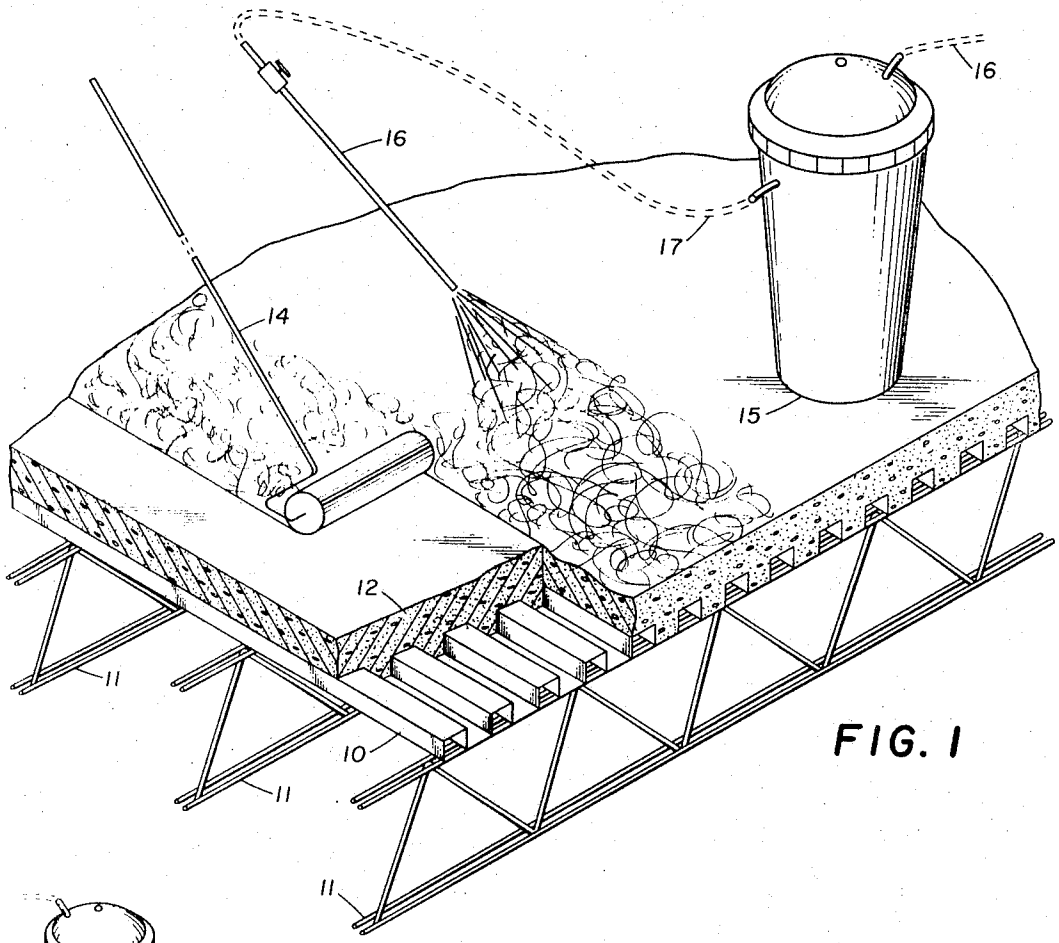

FIG. 1

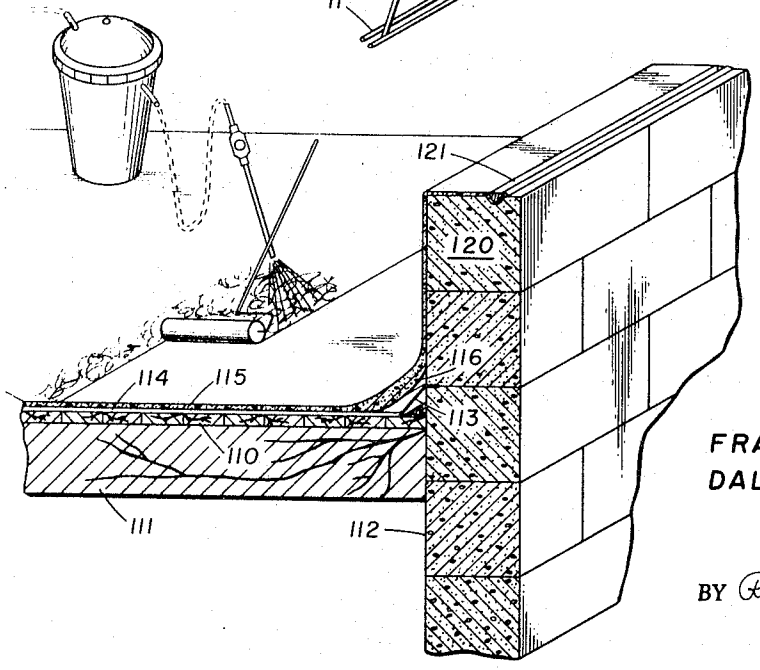

FIG. 6

FRANK W. CAMPBELL
DALE A. LEHR
INVENTORS

BY Richards Harris & Hubbard
ATTORNEY

Aug. 15, 1967 F. W. CAMPBELL ET AL 3,336,179

GLASS REINFORCED ROOF SYSTEM

Filed Jan. 3, 1966 3 Sheets-Sheet 2

FIG. 2

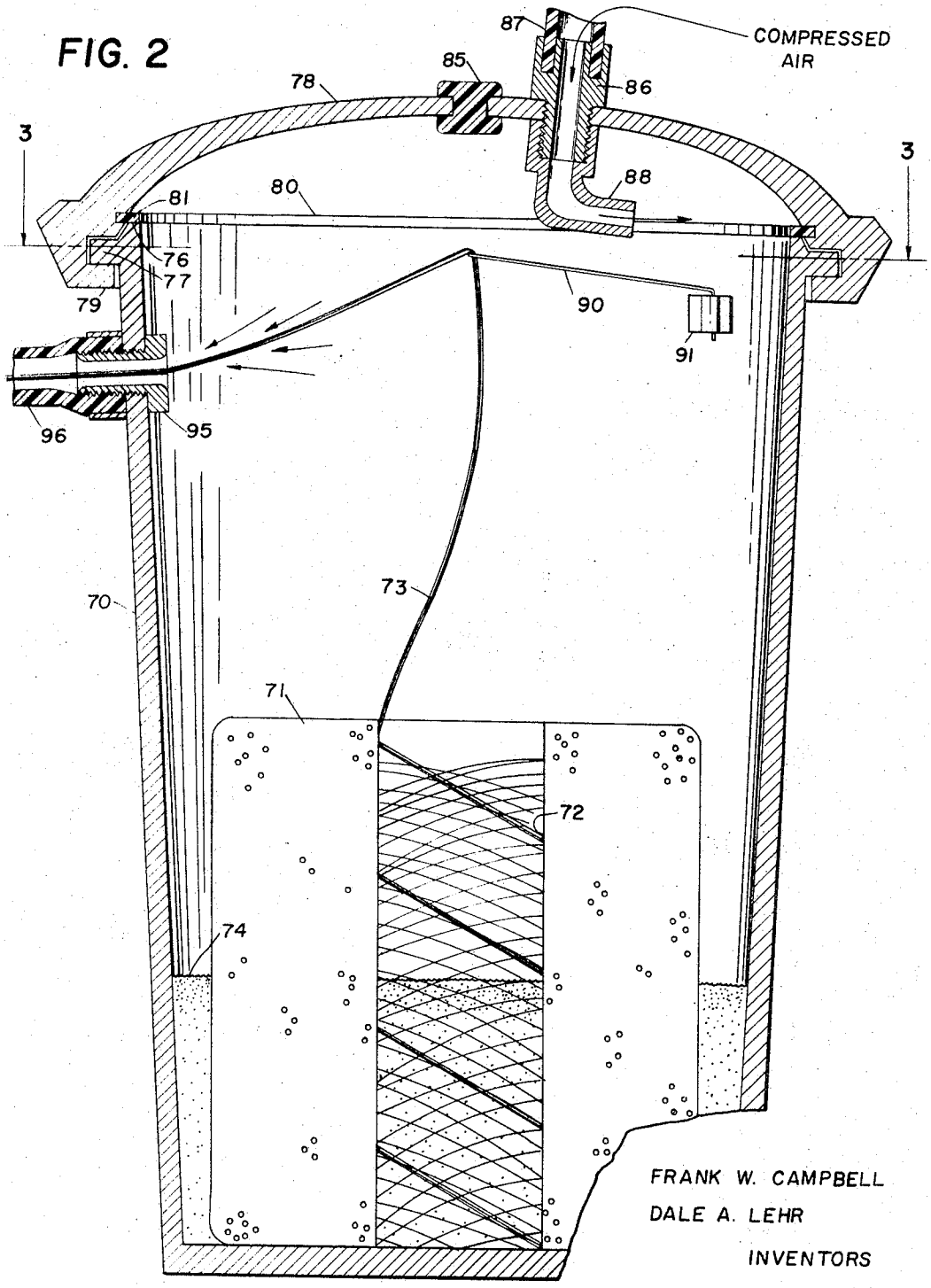

FRANK W. CAMPBELL
DALE A. LEHR
INVENTORS

BY Richards Harris & Hubbard
ATTORNEY

Aug. 15, 1967 F. W. CAMPBELL ET AL 3,336,179

GLASS REINFORCED ROOF SYSTEM

Filed Jan. 3, 1966 3 Sheets-Sheet 3

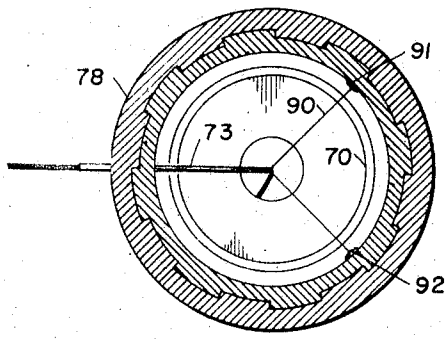

FIG. 3

FIG. 4

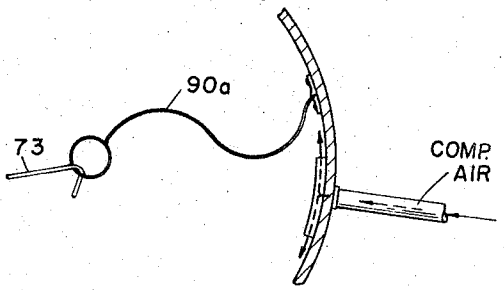

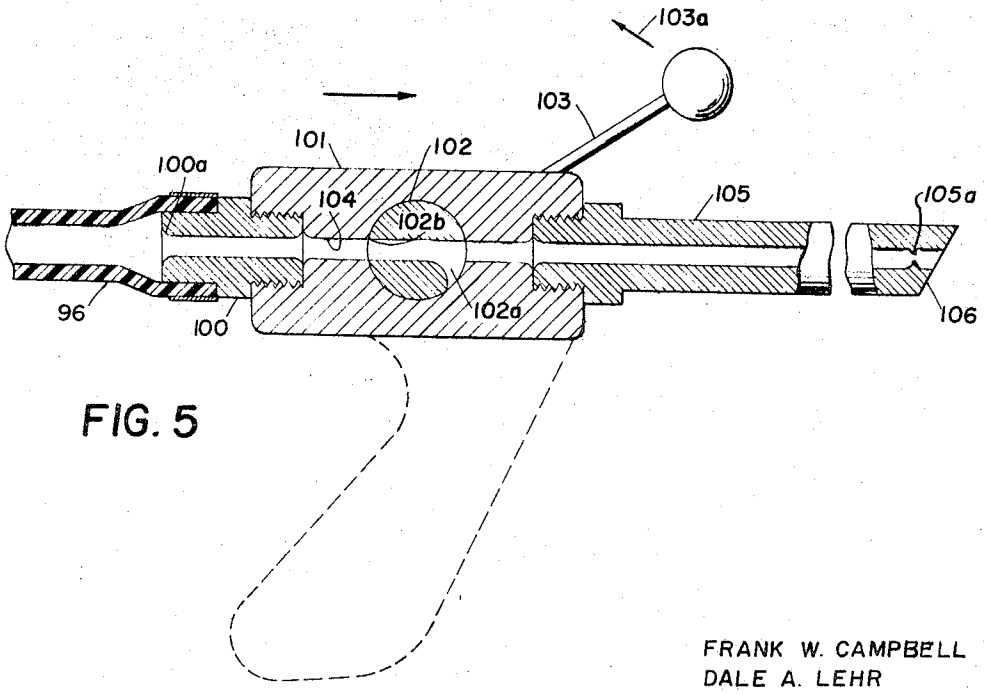

FIG. 5

FRANK W. CAMPBELL
DALE A. LEHR
INVENTOR

BY Richards Harris & Hubbard

ATTORNEY

United States Patent Office 3,336,179
Patented Aug. 15, 1967

3,336,179

GLASS REINFORCED ROOF SYSTEM

Frank W. Campbell and Dale A. Lehr, Dallas, Tex., assignors to The Archilithic Co., Dallas, Tex., a corporation of Texas

Filed Jan. 3, 1966, Ser. No. 518,463
3 Claims. (Cl. 161—72)

This application is a continuation-in-part of application Ser. No. 214,132 filed Aug. 1, 1962, now abandoned. This invention relates to the formation of roofing structures which are watertight, which are readily applied and which will withstand weathering over substantial periods without cracking. In a more specific aspect, the invention relates to the formation of a fiber reinforced waterproof film to form a waterproof finish.

The formation of watertight roof structure in general represents a substantial item of the cost of a building. Experience has taught that re-roofing operations often are required at a relatively early age in order to protect the building interior from damage. The use of rigid roof shells of concrete and the like is widely known. However, in both new structures as well as re-roofing operations there still remains the problem of a reliable installation which will withstand the stresses developed by various weathering conditions.

In addition to reliability, it is often desired to incorporate various color effects to promote the aesthetic appearance of the roof which in prior art systems is difficult to achieve. A number of compositions have been developed which have highly desirable characteristics for the formation of films for a final coating on roofs and decks. However, such coating materials are expensive and must be used in minimum quantity in order to be competitive and yet must be used in sufficient quantity to assure a reliable installation.

It is an object of the present invention to provide a method and system for the application of such improved coating materials while embodying within the resultant coating a new measure of integrity. More particularly, there is provided a roof coating suitable for either a new roof or for a re-roofing environment which is competitive cost-wise with more conventional roofing systems but which incorporates therein a reinforcing medium which facilitates application of the coating to compounds, assures long life under severe conditions, and prevents shrinkage while permitting application of coatings of greater thickness. Also provided is increased tensile strength with greater resistance to traffic wear. Further, there is incorporated a desirable appearance along with ability to withstand impact loads and coating forces by reason of continuity and mechanical integrity not heretofore available.

In accordance with the invention, there is provided a method of forming a stable waterproof roof at a site occupied by a new or an aged built-up pebble covered roof. The roof is first stabilized by application of a first coating of a time curing cement, such as a lightweight aggregate layer, or a polyester cement. Thereafter, a thin coating of a resilient material is followed by a randomly dispersed uniform layer of glass fibers and at least one final coating of resilient material accompanied by a depressant force to integrate the fibers into the film.

For a more complete understanding of the present invention and for further objects and advantages thereof, reference may now be had to the following description taken in conjunction with the accompanying drawings in which:

FIGURE 1 is an isometric view of a new roof installation;

FIGURE 2 is a sectional view of a pressurized chamber for dispensing fibrous materials;

FIGURE 3 is a reduced sectional view taken along the line 3—3 of FIGURE 2;

FIGURE 4 illustrates a modification of a guide and a compressed air entry port;

FIGURE 5 is a sectional view of a fiber control gun; and

FIGURE 6 is an isometric view of a re-roofing installation.

Referring to FIGURE 1, a new roof is provided with a surface covering of a reinforced, flexible, waterproof skin. More particularly, in this example there is provided a roof deck **10** of preformed metal sheets supported by trusses **11**. A relatively thin slab **12** of concrete is poured over the deck **10**. The concrete slab **12** may be either an insulating concrete such as formed from expanded aggregates or may be conventional concretes of heavier density. In either case, the upper surface is finished as to provide a substantially continuous planar surface. The surface does not require trowel finishing but should be at least the quality of a float finished surface.

After the finished surface is dry and has developed its initial strength, a coat of a suitable coating material is applied.

The coating material may be one of several different types available. One type is of the class generally known as asphaltic or coal tar pitch, water type emulsions. Another type is of the class generally known as elastomeric materials such as polymerized rubber and the like. Representative of the first class is the coating material of the type manufactured and sold by the Koppers Co., of Pittsburgh, Pa., under the trade name "Tar Guard." Tar Guard is a water-coal tar emulsion. Illustrative of the materials of the second type are those manufactured and sold by the Du Pont Company of Wilmington, Del. under the trade name "Neoprene." In either case, the coating composition is first applied to the surface by spraying or by rolling. In FIGURE 1 a roller **14** is illustrated as being employed for applying such a coating compound. The roller is preferred in some cases because of the economy with which a continuous and reliable coating can be applied.

In cases where the finish is applied to corrugated roofing sections, spray application may be found profitable. After the entire upper surface of the concrete slab **12** has been coated with a first layer of the coating material, there follows a highly dispersed, relatively scant layer of continuous fiber glass rovings.

In FIGURE 1 a tank **15** is provided in which a spool of fiber glass rovings is placed. A compressed air line **16** leads to the tank **15**. An output line **17** connects an output port in the tank **15** to a fiber control gun **16**. The air flowing through the tank **15** carries the fiber roving with it through the gun **16**. The gun is provided with a suitable dispersion type nozzle so that the fiber glass filaments issuing from the gun will be widely dispersed over the slab **12**. Thereafter, a second layer of the coating materials is applied by the roller **14** over the fiber glass to incorporate the glass into a resultant thin elastomeric coating.

In practice, the fiber glass is applied with a density of about one to one and one-fourth pounds per hundred square feet.

The amount of glass installed will vary greatly dependent upon the desired or specified quality of the resultant film, while the coatings may vary in total thickness dependent upon various conditions and specifications. In one application of the invention, a coating of an elastomeric material such as neoprene was applied in the base and finish coats in such quantity as to establish a film thickness of the order of 0.020 inch. The coatings of from 0.020 to 0.100 inch or more may be built up by

the present method. Since the coating material as applied contains solvents of high volatility, much of the total volume of the coating material as supplied in liquid form disappears during application and curing. In the example above given where a 0.020 inch coating was installed, neoprene was employed in the quantity of about four to seven or eight gallons per 100 square feet.

In order to apply the coating material on the fibers in such a manner as to be competitive even with the use of the coating compounds in quantities and of character that makes the cost thereof seem expensively high, it is necessary to apply fiber glass rovings to reinforce the coatings in relatively small quantities and at the same time to provide a substantially uniform dispersion of the fibers.

A preferred system for handling the glass fibers is illustrated in FIGURES 2–5. In FIGURE 2, for example, there is illustrated an improved and preferred embodiment of a pressure vessel which receives a spool of glass rovings particularly adapted to dispense the glass rovings. A relatively deep vessel **70** is provided with inwardly sloping shaped walls and a flat bottom. The diameter of the vessel **70** preferably is larger than the diameter of a spool of rovings so that a spool can be loaded or unloaded from the vessel with ease. The spool of rovings **71** is of the type in which the supply may be unwound from the inner wall **72** of the spool. The roving strand **73** will be understood generally to comprise a bundle of parallel, untwisted, separate strands of glass fibers or the like. Glass fiber rovings are commercially available in spools of bundles of twenty, thirty, one hundred or two hundred strands. The specific features of the control system for dispensing rovings of various numbers of strands will depend upon the bundle size to some degree as will hereinafter be pointed out.

The vessel **70** is provided with an upper shoulder **76** for sealing purposes. It is also provided with an outwardly extending segmented rib **77** which mates with locking means provided on a lid **78**. More particularly, the lid **78** is provided with a segmented, inwardly extending rib **79**. As best seen in FIGURE 3, the ribs **77** and **79** are intermeshed so that the lid can be placed over the vessel **70** and rotated to engage the ribs **77** and **79**. A gasket **80** is carried in an annular recess **81** in the lid **78** so that, when the lid is locked onto the vessel **70**, the gasket will bear on the upper shoulder **76**.

The lid is provided with a blowout gasket or plug **85**. The construction of the plug will be dependent upon the pressures to be employed in the given system. Also extending through the top of the lid **78** is a structure forming a flow channel. More particularly, a threaded bushing **86** and a supply line **87** are provided for introduction into the vessel **70** of compressed air or gas. The bushing **86** is threaded into the lid **78** and a fitting **88** is secured inside the lid onto the threaded extension of the bushing **86**. The fitting **88** comprises an elbow in which the direction of flow of the compressed air is diverted as to be parallel to the inner surface of the lid and is thus prevented from impinging directly into the spool **70** and the roving strand **73** as it courses upward from the spool **71**.

A roving guide **90** is provided in the upper region of the vessel **70**. The guide **90** in the form shown is a V-shaped yoke which extends from anchor tabs **91** and **92** upward and toward the center of the vessel **70** to an apex which is located generally in the region of the axis of the vessel **70**. The guide **90** is formed of a rigid smoothed-surface wire so that there will be minimized any entanglement or tendency to interrupt or interfere with the flow of the strand **73**.

The strand **73** is threaded over the guide **90** and then extends through an outlet bushing **95** which is threaded into the wall of the vessel **70**. A flexible hose **96** is secured to and extends from the bushing **95**. The bushing **95** is provided with a central flow channel through which the strand **73** passes. The bushing is formed with a flared or rounded entry which is smooth so that there will be a minimum of wear or friction on the fibers as they enter therein. The fibers then course through the flexible hose **96** to a control gun such as shown in FIGURE 5.

Before proceeding with a description of FIGURE 5, it is emphasized that a fiber gun which will operate for extended periods is dependent upon the manner of control exercised upon the roving **73**. In the course of producing spooled rovings, small segments or short lengths of fiber glass are left in the spool. Further, the movement of fiber rovings at relatively high velocities serves to establish electrostatic charges in the system so that there is a tendency to pull to the discharge port in the fitting **95** debris and bits of glass fibers. Such debris tends to clog or disrupt the uniform flow of the fibers.

It has been found that control it materially enhanced by the inclusion of a suitable treating substance in or on the spool **71**. More particularly, there is provided a lubricant for the fiber roving which in one form is a talcum powder. As indicated in FIGURE 2, the spool **71** is set on the bottom of the vessel **70**. Talcum powder is then provided in quantity sufficient to fill the center void and the annulus around the spool **71** to a suitable level generally indicated by the level **74**. Some of the powder will be heaped onto the upper surface of the spool **71** so that the fiber as it is withdrawn from the spool will be coated with talcum which serves to lubricate the fiber in its course through the hose **96**. Additionally, the talcum serves to assist in the removal of any electrostatic charge accumulated on the fiber roving as it is entrained for movement from vessel **70**.

A spool of fiber rovings having the lubricant impregnated therein and distributed throughout the entire spool facilitates the handling of the rovings. Other lubricants than talcum powder have been employed with satisfactory results. Powdered asbestos, carbon, and aluminum have been used satisfactorily. Furthermore, by incorporating such materials into the spool of rovings itself, they can be dispensed in measured amounts proportional to the amount of roving drawn from the spool.

In FIGURE 5, the fiber control gun is illustrated as being coupled by way of the hose **96** leading from the vessel **70** of FIGURE 2. Hose **96** is connected to a bushing **100**. The bushing **100** is part of a flow channel extending through the gun structure **101**. A plug valve **102** is adapted to be rotated by a control handle **103**. As indicated, the plug valve **102** is positioned in a cylindrical opening in the valve body **101** and permits fiber flow through channel **104** in the open position. A pipe **105** extends from the forward end of the valve body **101**. The flow channel **104** continues through the pipe **105** to a discharge point **106**.

It will be noted that the channel through the valve body **102** is generally cylindrical and is tapered at the downstream section **102*a***. By this means, there is avoided the cutting of small segments of rovings when the valve is closed. Closure of the valve is brought about by moving the handle **103** in the direction of the arrow **103*a***. The edge **102*b*** of the valve body serves to sever the rovings as the valve is closed. However, since the diametrically opposite edge of the channel passing through the valve **102** is relieved as at section **102*a***, the trailing edge of the glass roving is permitted to continue on through the nozzle section **105** and is thus discharged, leaving the gun free and clear for re-establishing flow immediately upon opening of the valve.

It has been found necessary to make the valve substantially pressure-tight when closed. Otherwise, leakage of air therethrough causes the rovings to pile up in the flow channel **96** adjacent to the valve and thus causes the operation to become fouled upon attempted resumption.

It will be noted that the fitting **100** is provided with smooth entry sections such as the faired entry port **100*a***. In addition, each connection element is similarly faired so that mechanical working of the glass fibers as they pass

therethrough is minimized. Production of debris in the channel which would foul the flow channel is substantially eliminated.

With the system illustrated in the FIGURES 1–5, fiber glass rovings are applied as an intermediate coat between two coatings of elastomeric coating material. In accordance with a preferred embodiment of the invention, the container illustrated in FIGURE 2 is operated at an air pressure of about 20 pounds per square inch. Glass fiber rovings of 60 strands are employed. The relatively slow rate of discharge of the rovings produced by use of low pressure and a relatively small number of fiber strands per roving facilitates wide distribution and disintegration of the roving into separate filaments. As a result, there is a substantially uniform random distribution of fibers over the slab **12**. In a preferred embodiment, the control gun of FIGURE 5 is provided with protrusions or deformations **105***a* along the flow channel **105** at the discharge port, so that turbulence is created in the air stream as the fibers leave the gun, thereby greatly enhancing the distribution of the individual fibers.

The foregoing deals with the formation of a new roof illustrated in FIGURE 1 with the facilities described above in connection with FIGURES 2–5. It may be found desirable in forming the concrete slab **12** to add reinforcing glass fibers dispensed in the same manner above described and incorporated in the surface of the slab **12**. Such reinforcement will inhibit the tendency to form hairline cracks therein. In any event, there is provided a relatively thin but reliable surface coating in which a resilient coating material is reinformed with a uniform dispersion of relatively low density of continuous fiber glass rovings. The continuous character of the rovings provides for a finer final appearance and greater continuity having greater tensile strength than is possible through the use of chopped fibers and the like and at the same time provides a medium which permits the use of the coating material which otherwise is difficult to control.

In FIGURE 6, the invention is illustrated in connection with an aged roof to be recovered for waterproofing or for appearance or both. The installation illustrated involves a lumber deck **110** supported by joists, such as joist **111**, terminated adjacent to a parapet wall **112**. In the initial construction a cant strip was applied at the joint between the wall **112** and the deck **110** which, together with flashing **113**, served to seal the roof. A built-up roof cover involving a plurality of layers of sheet material such as felt and hot asphalt with a final layer of gravel is represented by layer **114**. In conventional re-roofing operations the gravel cover is removed along with one or more felt layers so that a virgin surface area is exposed. Onto this area a new built-up section topped with fresh gravel is applied. In accordance with the present invention, a new roof structure is applied without disturbing the old roof structure other than merely cleaning off foreign debris such as leaves or papers, large rocks and the like which may have collected on the old roof. After the initial general cleaning, there is first applied to the old room directly on top of the gravel a stabilizing layer **115** of concrete in which fiber glass rovings are embedded. Ordinarily, a relatively thin layer **115** of light weight concerete may be applied to the order of three-eighths to one-half inch thick. However, it may be an inch or more, depending upon the dimensions of the pebbles used on the old roof and will be sufficient to cover completely any such gravel or pebbles. Thinner layers of stabilizing materials may be applied when formed of glass embedded in sprayable polyesters, such as the sprayable polyester No. 4152 manufactured and sold by American Cyanamid Co., of New York, N.Y., or the general purpose sprayable polyester manufactured and sold by Allied Chemical Co., of Morristown, N.J. Furthermore, a form **116** is provided at the juncture between the roof and the parapet wall which completely encases and old cant strip and flashing **113**. The cement layer **115** thickens over the form **116** and continues up the wall itself and onto the top of the wall. There is thus provided a continuous reinforced skin extending from the deck to the top of the parapet wall. In the example illustrated, the coating extends onto the top of the parapet wall. However, it may be terminated at the bottom of a parapet stone in a suitable reglet.

After the layer **115** has been allowed to dry and to attain its initial strength, there is then applied an initial layer followed by a reinforced layer of sealing material in the manner above described in connection with FIGURE 1. In this case, however, the glass fibers together with the sealing material are applied as by roller **14** and gun **16** not only to the deck itself on top of the stabilizing concrete layer but also continue up the wall surface and onto the top of the wall. In a preferred aspect of the invention, the top layer of blocks, such as the blocks **120**, is provided with a surface groove **121**. As the coating material and glass fibers are applied, the coating is forced into the groove by a suitable finishing instrument so that the roofing coating is terminated at the groove **121** in a sealed manner. The groove will be filled with caulking to seal the coating.

In carrying out the roofing operations such as illustrated in FIGURES 1 and 6, the concrete mix forming the cementious material for the matrix in the stabilizing layer **115** may be of the following constituents and in the following relative proportions:

Table I

Portland cement ---------- cubic feet--	2
Polyvinyl alcohol of type such as Elvanol Grade 51–05, available from Du Pont of Wilmington, Del. pounds--	6
Perlite concrete aggregate (8 pounds per cubic foot) cubic feet--	2
Perlite aggregate 60–40 ---------- do----	2
Standard plaster sand ---------- do----	3
Fly ash ---------- pounds--	12
Water ---------- gallons--	17

There results a lightweight aggregate having a modulus of elasticity of the order of two to six million pounds per square inch. By reason of its relatively low modulus of elasticity and the inclusion therein of the alcohol, it is wholly compatible with fiber glass strands.

The pressurized container method and system for dispersing the fiber rovings disclosed herein are described and claimed in an application of James B. Winn, Jr., entitled Dispensing of Fibrous Material, Ser. No. 206,497, filed June 29, 1962, now Patent No. 3,111,270.

Having described the invention in connection with certain specific embodiments thereof, it is to be understood that further modifications may now suggest themselves to those skilled in the art and it is intended to cover such modifications as fall within the scope of the appended claims.

We claim:

1. The re-roofing cover for a built-up pebble-covered roof which comprises:

(a) a layer of light weight concrete having a depth approximately eyqual the major dimension of the largest of the pebbles on said roof for smoothing and stabilizing the surface of said roof,

(b) a thin coating on said layer of a waterproof coating emulsion,

(c) a cover over said roof overlaying said thin coating with a substantially uniform random dispersion of continuous glass fibers, and

(d) a second layer of said coating emulsion over said fibers to hold said fibers substantially at the configuration of the concrete layer.

2. The roof set forth in claim **1** in which said cover is an elastomeric material of a solvent type coating emulsion with glass fibers interspersed therein.

3. The roof set forth in claim **1** in which said cover

is an asphaltic-water emulsion with glass fibers dispersed therein.

References Cited

UNITED STATES PATENTS

1,230,396	6/1917	Foster	52—58
1,977,669	10/1934	Dantz	52—516
2,695,257	11/1954	Castellani	161
2,849,018	8/1958	Donegan et al.	52—516 X
3,096,225	7/1963	Carr et al.	234—235 X
3,111,440	11/1963	Prentice	156—71
3,144,376	8/1964	Plumberg	161—156

OTHER REFERENCES

Addex publication: "How to Apply Addex Roofshield on Smooth Asphalt Surfaces," by Labco Inc., Cleveland, Ohio, 2 pp.

Asphalt and Allied Substances, by Abraham, 5th ed., pub. by D. Van Nostrand Co., New York, vol. , pp. 736, 737, vol. 2, p. 1725.

Built-up Roofs, by Owens-Corning Fiberglas Corp., April 1952.

Journal of American Concrete Institute, February 1959, p. 5.

JOHN E. MURTAGH, *Primary Examiner.*