Feb. 13, 1968 J. P. NORTON ETAL 3,368,364

REFRIGERATION CONTROL SYSTEM

Filed Jan. 6, 1966

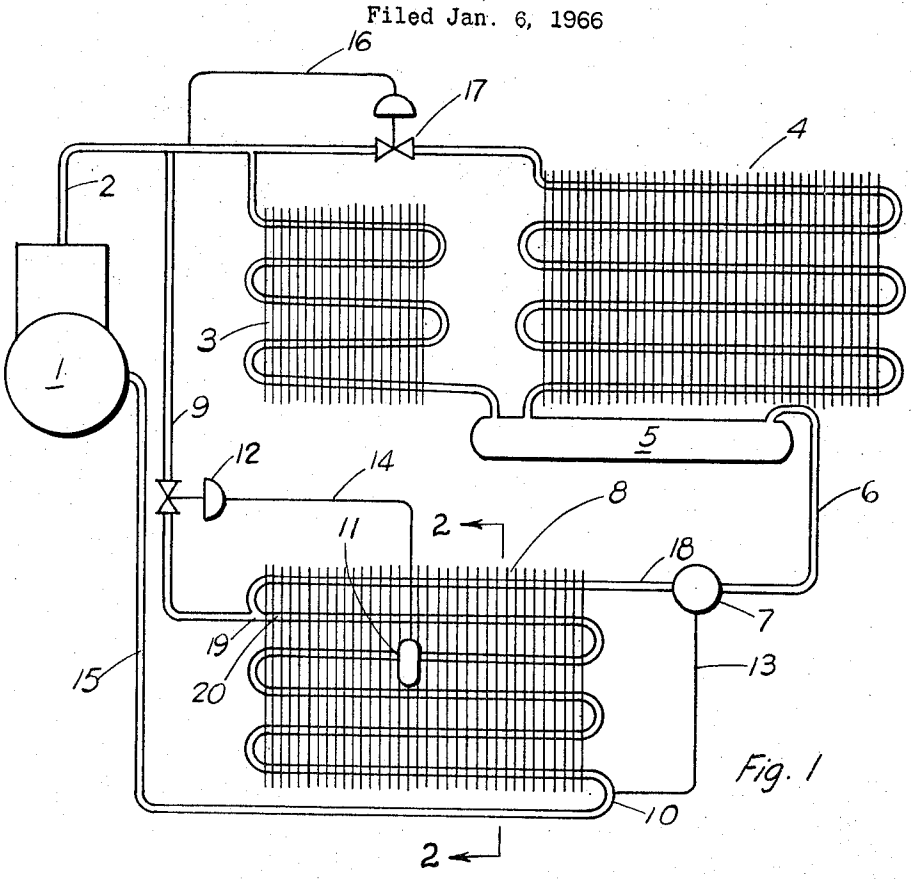

Fig. 1

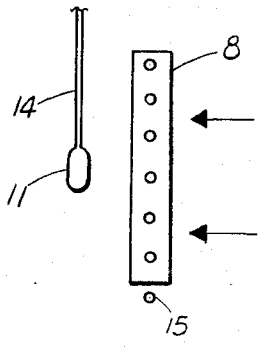

Fig. 2

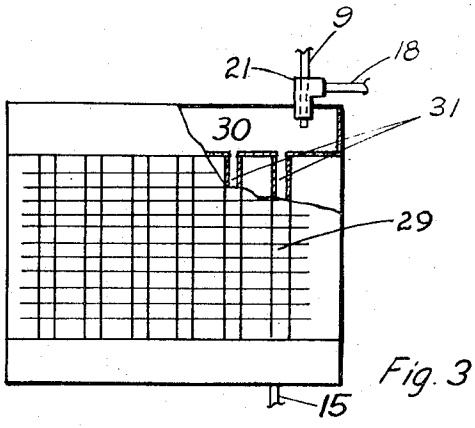

Fig. 3

INVENTORS

Saxon Cole

John P. Norton

United States Patent Office 3,368,364
Patented Feb. 13, 1968

3,368,364

REFRIGERATION CONTROL SYSTEM

John P. Norton, St. Louis, and Saxon Cole, Shrewsbury, Mo., assignors to American Air Filter Company, Inc., Louisville, Ky., a corporation of Delaware

Filed Jan. 6, 1966, Ser. No. 519,041
4 Claims. (Cl. 62—117)

ABSTRACT OF THE DISCLOSURE

This invention relates to a method and apparatus for regulating the operation of a refrigeration system including a hot gas bypass system to pass a portion of the compressed refrigerant directly from the compressor outlet to the evaporator and means to apportion the second portion of the refrigerant between parallel condensers to control the condensing surface and the rate of condensation of refrigerant.

Background of the invention

In refrigeration systems having a refrigerant compressor, refrigerant condenser, a refrigerant expansion valve, and an evaporator, the cooling capacity of the evaporator and the compressor discharge pressure have been regulated by mixing hot compressed refrigerant from the compressor outlet with expanded refrigerant before the mixture is passed to the exaporator. In some previous refrigeration systems, the hot compressed refrigerant has been mixed with condensed refrigerant on the downstream side of the condenser before the expansion valve. In other refrigeration systems the heat compressed refrigerant has been introduced directly into the expansion valve, or in some instances, the hot refrigerant has been introduced downstream of the expansion valve but upstream of the evaporator.

In the apparatus and method of previous refrigeration systems, mixing compressed refrigerant with expanded refrigerant upstream of the evaporator increases flow resistance and pressure in the area of mixing. Increased pressure is transmitted through the system as a wave which causes undesirable fluctuations in refrigerant flow, and variable pressure drop across the expansion valve leading to momentary interruptions in flow or reduced flow capacity through the valve. Erratic operation of the expansion valve adversely affects the refrigeration control system and causes cyclic operation of the refrigeration system.

In previous refrigeration systems where the cooling capacity of the evaporator is regulated by the rate of introduction of heat compressed refrigerant into expanded refrigerant upstream of the evaporator, cyclic operation has resulted and makes system control very difficult.

Summary of the invention

In accordance with the new and advantageous method and apparatus of the present invention, it has been found that the undesirable pressure wave can be eliminated and stable operation can be realized, without additional complicated equipment or radical changes in design of conventional equipment, by mixing compressed refrigerant with expanded refrigerant in the evaporator instead of upstream of the evaporator. Further, in accordance with the present invention it has been found that advantageous features of the present invention are further improved by controlling the discharge pressure of the refrigerant compressor. The advantageous and useful method and apparatus of the present invention further provides improved operation in systems where the cooling capacity of the evaporator is regulated by the rate at which compressed refrigerant is mixed with expanded, cooled refrigerant.

Various other features of the present invention will become obvious to one skilled in the art upon reading the disclosure set forth hereinafter.

In accordance with the present invention, an improved refrigeration system is provided comprising: a refrigerant compressor, for compressing a refrigerant medium, including an expanded refrigerant inlet and a compressed refrigerant outlet; a refrigerant condenser, to cool compressed refrigerant medium, including compressed refrigerant inlet communicating with the compressor outlet and a cooled refrigerant outlet; a refrigerant expansion means to expand cooled refrigerant, including a refrigerant inlet communicating with the condenser outlet and an expansion means outlet; refrigerant evaporator means to receive expanded refrigerant medium and transfer cooling effect from the refrigerant to a load to be cooled wherein the load is cooperatively associated with the evaporator to receive the cooling effect, the refrigerant evaporator means including refrigerant inlet means communicating with the expansion means outlet, refrigerant outlet means communicating with the compressor expanded refrigerant inlet, and a separate compressed refrigerant inlet to cooperatively mix compressed refrigerant with expanded refrigerant in the evaporator; and a compressed refrigerant bypass conduit to pass refrigerant from the compressor outlet to the evaporator, including a first end comunicating with the compressor outlet and a second end communicating with the evaporator.

Further, in accordance with the present invention, a novel refrigeration method is provided comprising: compressing a refrigerant in a compressor; passing compressed refrigerant from the compressor to a condenser; cooling a first portion of the compressed refrigerant in the condenser; expanding the first portion of the refrigerant; passing the expanded refrigerant to an evaporator to provide a cooling effect for a load to be cooled; passing a second portion of the compressed refrigerant from the compressor to the evaporator; mixing the second portion of refrigerant with the first portion of refrigerant in the evaporator; and passing the mixed first and second portions from the evaporator to the compressor means.

Referring now to the drawing which discloses one advantageous example of the present invention:

FIGURE 1 shows a schematic view of a refrigeration system embodying the principles of the present invention;

FIGURE 2 is a view taken along a line passing through plane 2—2 of FIGURE 1, showing a cross section of the evaporator of FIGURE 1; and

FIGURE 3 is a front view, partly in section, showing an alternative embodiment of an evaporator using the method and apparatus of the present invention.

The schematic view of FIGURE 1 shows a refrigeration system including a compressor 1 having a compressed refrigerant outlet 2. Condensers 3 and 4 are provided to cool, and at least partially condense, the compressed refrigerant which is then delivered to receiver 5. Condensed refrigerant line 6 connects receiver 5 and thermostatic expansion valve 7. Refrigerant is expanded in thermostatic expansion valve 7 and passed to evaporator 8. A conduit 15 connects the outlet of evaporator 8 with the inlet of compressor 1.

In accordance with a novel feature of the present invention, a compressed refrigerant bypass 9 is provided to connect compressor outlet 2 directly with evaporator 8, so that the compressed refrigerant is directly and efficiently combined with expanded refrigerant in the evaporator. Further in accordance with the present invention, it has been found that mixing hot compressed refrig-

erant with expanded refrigerant in the evaporator eliminates the undesirable pressure wave as hereinbefore described, which is generated in previous systems.

One apparatus for introducing compressed refrigerant directly into a refrigerant evaporator without causing an undesirable pressure wave, in accordance with the present invention, is shown in FIGURE 1. Compressed refrigerant conduit **9** can, advantageously, be joined in return coil **20** of the evaporator **8** to mix compressed refrigerant with expanded refrigerant after the expanded refrigerant has passed part way through evaporator **8**. Before mixing with hot compressed refrigerant the expanded refrigerant is warmed and vaporized in passing through a part of evaporator **8** so flow velocity and refrigerant quality begin to approach that of the compressed refrigerant introduced at **19**.

In an example of the present invention as seen in FIGURE 1, compressed refrigerant flow rate from compressor discharge line **2** through conduit **9** into one of the return bends of coil **8** can be controlled by flow control valve **12**. The cooling capacity of evaporator **8** is determined by the relative proportions of compressed and expanded refrigerant to be introduced to evaporator **8**, and in accordance with the present invention, hot compressed refrigerant flow rate to evaporator **8** can be used to regulate cooling capacity of evaporator **8**. In the example of FIGURE 1, a control valve **12** can control the rate of flow of compressed refrigerant through conduit **9** in response to the temperature of the load cooled by evaporator **8**. As shown in FIGURE 2, the fluid to be cooled can be passed through evaporator **8** by any convienent fluid moving means (not shown) and passed over thermal bulb **11** which communicates with flow control valve **12** by means of conduit **14** to control the operation of valve **12** accordingly.

In another example in accordance with the present invention, a distributor-type evaporator **29** can be substituted in the system of FIGURE 1 for the coil evaporator shown. The evaporator of FIGURE 3 includes a refrigerant header **30** as shown. An injector **21** can be provided to mix in header **30** of evaporator **29**, expanded refrigerant from conduit **18** with compressed refrigerant from conduit **9**.

In the refrigeration system of FIGURE 1, expansion valve **7**, which can be a thermostatic expansion valve, can be controlled to modulate flow in response to thermodynamic conditions of the refrigerating medium in the low pressure side of compressor conduit **15** or by other suitable means. Conduit **13** can be connected to communicate with conduit **15** at outlet **10** of evaporator **8** to transmit thermostatic conditions of the refrigerant to expansion valve **7**.

For various reasons it has been found desirable to provide means for controlling the refrigerant pressure in compressor outlet **2**. For instance, controlling compressor discharge pressure and accordingly condenser discharge pressure provides a constant reference pressure against which expansion valve **7** operates and improves the operation of such valve **7**. In another instance, when the discharge pressure is not controlled and the refrigerant condenser is exposed to very low temperatures, the equilibrium pressure of the refrigerant in the condenser decreases, and therefore, the pressure at compressor outlet **2** is below the desired minimum operating pressure. Furthermore, in accordance with the present invention, it has been found that the advantages of the novel feature of introducing hot compressed refrigerant directly into the evaporator of a refrigeration system can be further enhanced by maintaining a uniform compressor discharge pressure.

In this example of the present invention, compressor discharge pressure can advantageously be controlled by a split condenser arrangement, such as condensers **3** and **4**, with means such as valve **17** to control the flow of refrigerant to condenser **4**.

Condenser **3** can advantageously be designed to remove the quantity of heat normally gained by the refrigerant passing through compressor **1** when there is minimum load on evaporator **8** and condensers **3** and **4** are exposed to a minimum temperature. Therefore, when the refrigeration system is operated with a minimum load on the evaporator and a very low temperature in the area surrounding the condenser, the refrigerant will gain sufficient heat in passing through the compressor to maintain compressor discharge pressure within desired limits. The capacity of condenser **4** can be equal to the maximum heat load which evaporator **8** will be expected to remove. Valve **17** communicating with compressor outlet **2** by means of conduit **16** can be provided to control the flow of refrigerant through condenser **4** in response to the pressure in compressor outlet **2**. In the advantageous example of the present invention, valve **17** can control compressor outlet pressure by regulating flow of refrigerant to condenser **4** in response to a compressor discharge pressure above a selected minimum. Valve **17** closes at a preselected minimum compressor discharge pressure so refrigerant is then condensed only in condenser **3**. It will be realized the increased pressure can result for any number of reasons, including increased temperature of the cooling medium surrounding the condenser or an additional heat load on evaporator **8**.

The invention claimed is:

1. An improved refrigeration system comprising: a refrigerant compressor for compressing a refrigerant medium having a refrigerant inlet and a compressed refrigerant outlet; refrigerant condenser means to cool said compressed refrigerant medium including a first condenser section having warm refrigerant inlet means communicating with said compressor outlet and cooled refrigerant outlet means, and a second condenser section including warm refrigerant inlet means communicating with said compressor outlet and cooled refrigerant outlet means; refrigerant control means to regulate flow of warm refrigerant to said second condenser section in accordance with refrigerant pressure at said compressor outlet; refrigerant expansion means including an inlet communicating with said cooled refrigerant outlets of said first and second condenser sections and an expanded refrigerant outlet; refrigerant evaporator means to receive expanded refrigerant medium and transfer a cooling effect from said refrigerant to a load to be cooled which is cooperatively associated with said evaporator in heat transfer relation to receive said cooling effect, said refrigerant evaporator means including refrigerant inlet means communicating with said expanded refrigerant outlet means of said expansion means, refrigerant outlet means communicating with said compressor refrigerant inlet; and, a compressed refrigerant condenser bypass conduit means to pass compressed refrigerant from said compressor to said evaporator in accordance with the temperature of said load to be cooled, said conduit including a first end communicating with said compressor outlet and a second end communicating with said evaporator refrigerant inlet means.

2. The apparatus of claim **1** including: compressed refrigerant thermostatic flow control means to regulate flow of compressed refrigerant through said condenser bypass conduit to said evaporator in response to temperature of said load on which cooling effect is exerted.

3. An improved method for controlling the operation of a refrigeration system comprising: compressing a refrigerant in a compressing zone; dividing said compressed refrigerant into first and second portions; dividing said first portion between parallel refrigerant condenser means in accordance with the condition of said refrigerant in said compressing zone to control the pressure of refrigerant emitted from said compressing zone and cool said first portion of compressed refrigerant; passing said expanded first portion of refrigerant into an

evaporative zone to provide a cooling effect to a load to be cooled; passing said second portion of said compressed refrigerant directly from said compressing zone to said evaporative zone; mixing said second portion with said first portion in said evaporative zone; and, returning said mixed first and second portions from said evaporative zone to said compressing zone.

4. The method of claim 3 including: controlling flow of said compressed refrigerant from said compressing zone to said evaporative zone in response to temperature of said load to be cooled.

References Cited

UNITED STATES PATENTS

1,790,237	1/1931	King	62—196
2,252,300	8/1941	McGrath	62—196
2,344,215	3/1944	Soling	62—196
2,614,394	10/1952	McGrath	62—199
2,710,507	6/1955	Ashley	62—81
2,944,411	7/1960	McGrath	62—278 X

MEYER PERLIN, *Primary Examiner.*