# United States Patent

Des. 242,511

Patented Nov. 30, 1976

242,511


## PEGBOARD MOUNTED SUPPORT FOR A HEDGE TRIMMER


Albert J. Enckler, North Olmsted, Ohio, assignor to A-B-L Associates, Inc., Cleveland, Ohio



Filed Sept. 11, 1975, Ser. No. 602,453

Term of patent 14 years

Int. Cl. D6—*04*

U.S. Cl. D6—114


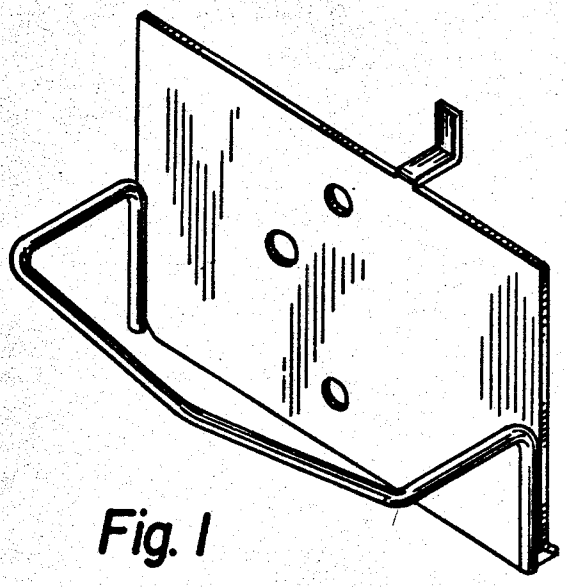

Fig. 1

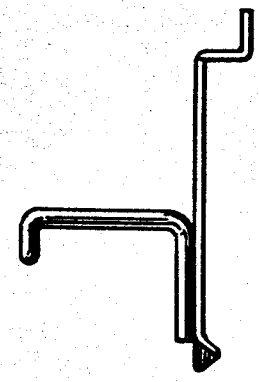

Fig. 2

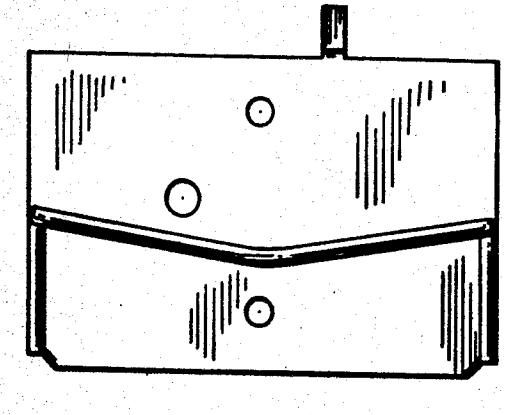

Fig. 3

FIG. 1 is a perspective view of a pegboard mounted support for a hedge trimmer showing my new design;

FIG. 2 is a side elevational view thereof; and

FIG. 3 is a front elevational view thereof.

I claim:

The ornamental design for a pegboard mounted support for a hedge trimmer, as shown and described.


**References Cited**

UNITED STATES PATENTS

| | | | |
|---|---|---|---|
| D. 213,451 | 3/1969 | White | D6—125 |
| 2,991,968 | 7/1961 | Lydard | 248—223 |
| 3,315,816 | 4/1967 | Mallory | 248—Dig. 3 |
| 3,484,069 | 12/1969 | Larson | 248—216 |



WALLACE R. BURKE, Primary Examiner

B. J. BULLOCK, Assistant Examiner