(No Model.) 6 Sheets—Sheet 1.

L. H. BRIGHTMAN.

MACHINE FOR DRAWING WIRE.

No. 564,302. Patented July 21, 1896.

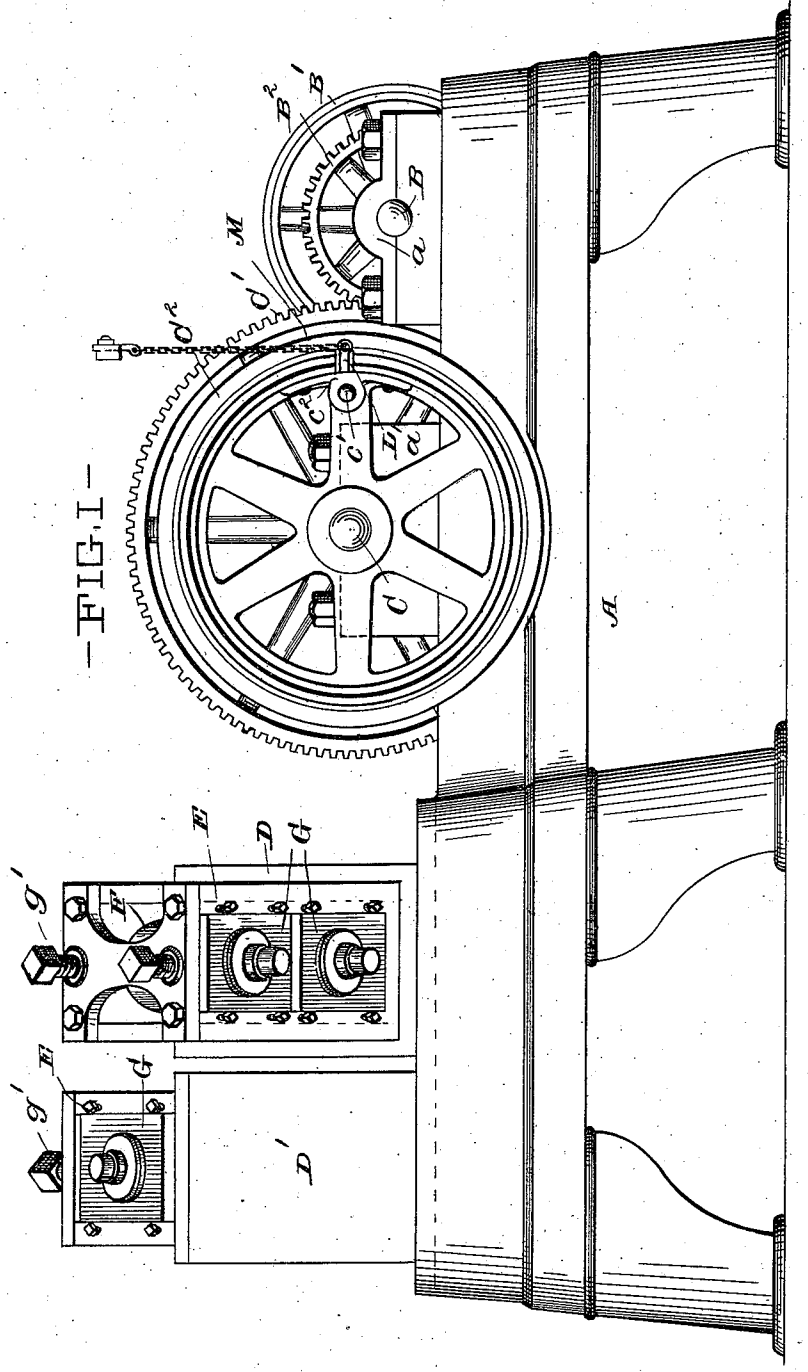

—FIG. I—

Witnesses,
J. C. Turner
Wm Fecher

Inventor,
L. H. Brightman
By Hall & Fay
Attys.

THE NORRIS PETERS CO., PHOTO-LITHO., WASHINGTON, D. C.

(No Model.) 6 Sheets—Sheet 2.

L. H. BRIGHTMAN.

MACHINE FOR DRAWING WIRE.

No. 564,302. Patented July 21, 1896.

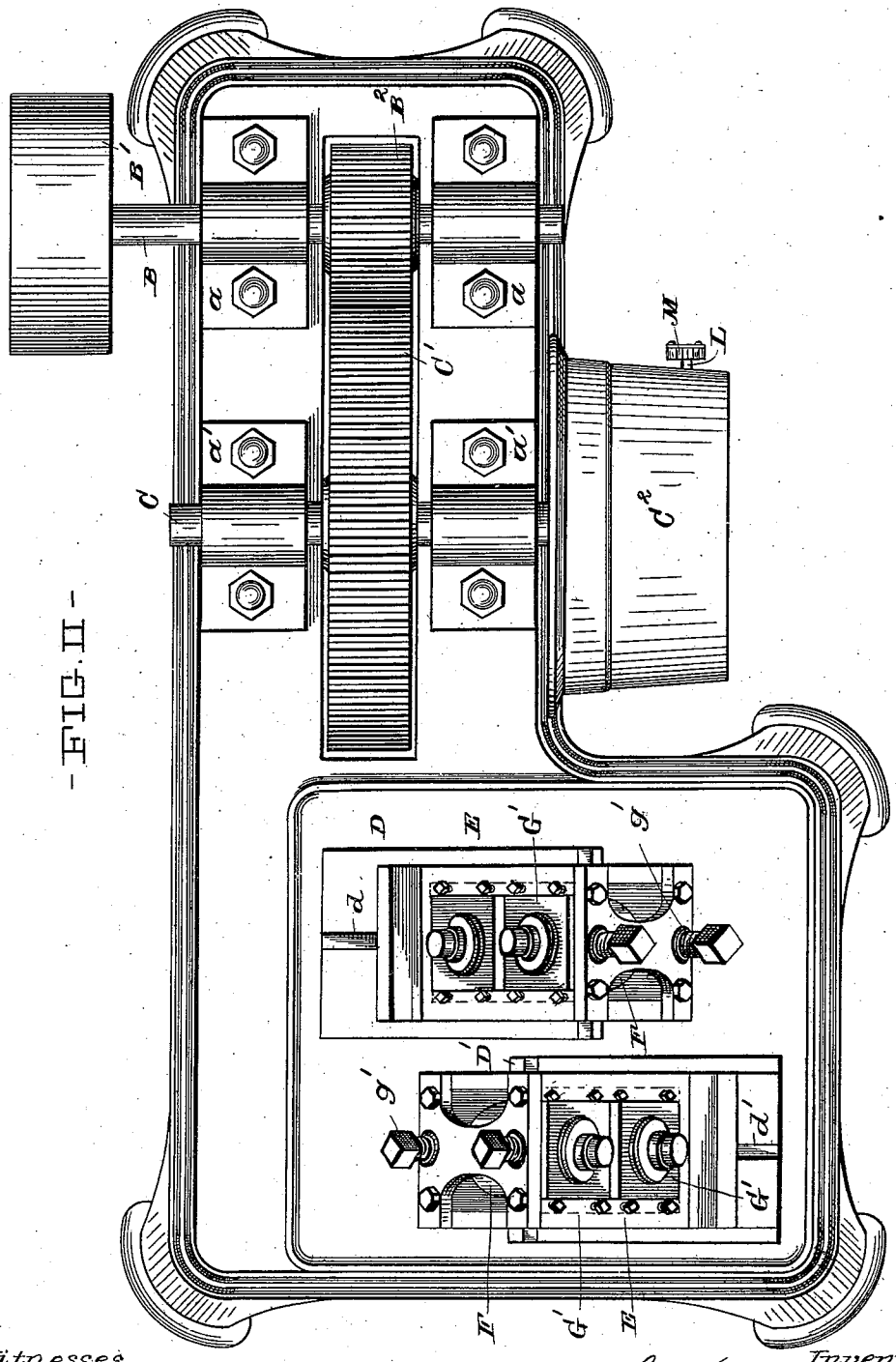

FIG. II.

Witnesses,
J. C. Turner
Wm. Secker

Inventor,
L. H. Brightman
By Hall & Fay
Atty's.

THE NORRIS PETERS CO., PHOTO-LITHO., WASHINGTON, D. C.

(No Model.) 6 Sheets—Sheet 3.

L. H. BRIGHTMAN.

MACHINE FOR DRAWING WIRE.

No. 564,302. Patented July 21, 1896.

—FIG. III—

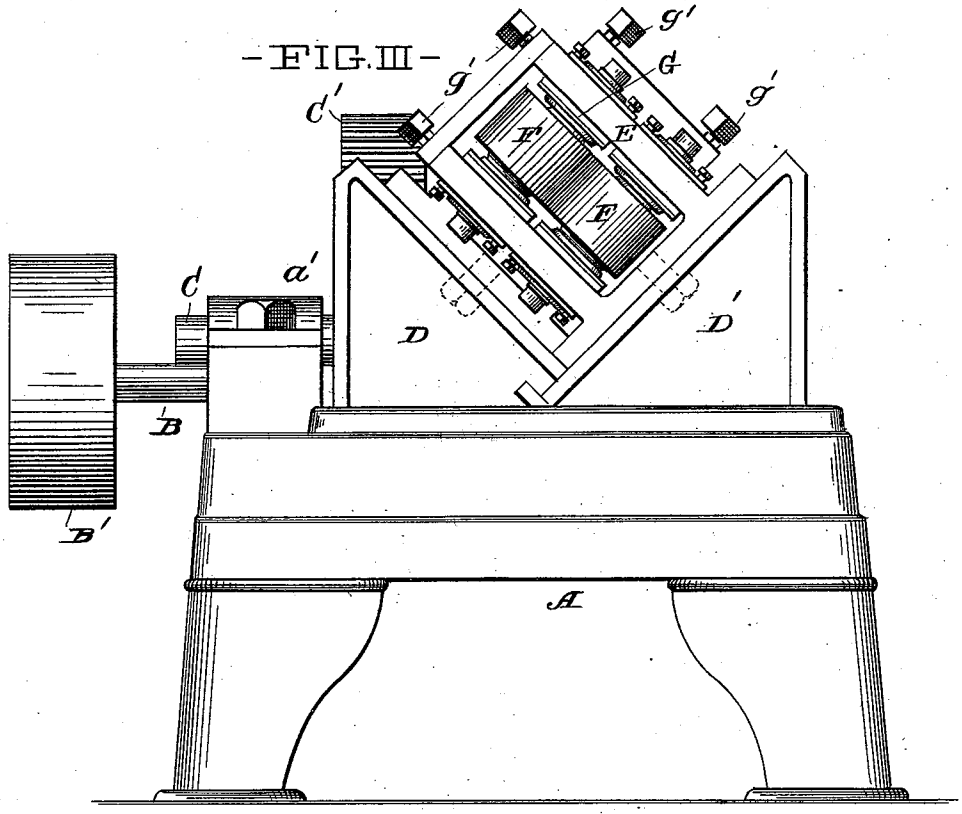

—FIG. IV—

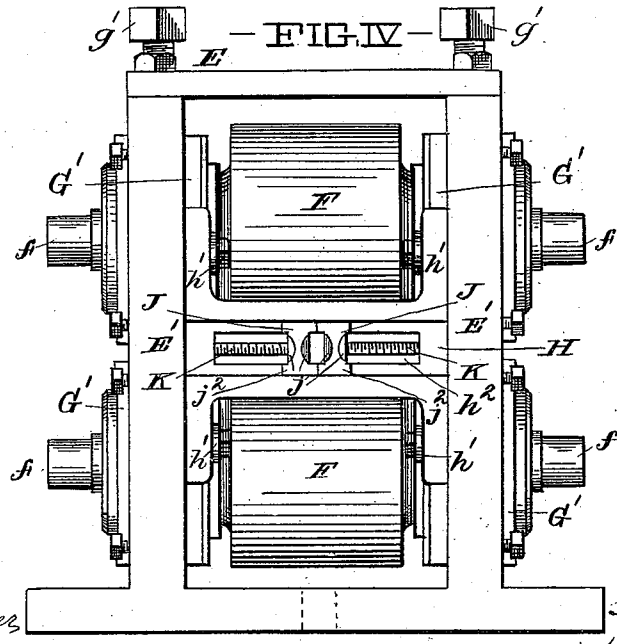

Witnesses,
J. C. Turner
Wm. Fecher

Inventor,
L. H. Brightman
By Hall & Fay
Atty's.

THE NORRIS PETERS CO., PHOTO-LITHO., WASHINGTON, D. C.

(No Model.) 6 Sheets—Sheet 4.

L. H. BRIGHTMAN.

MACHINE FOR DRAWING WIRE.

No. 564,302. Patented July 21, 1896.

-FIG. V a-

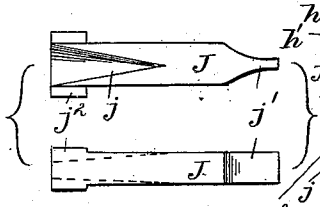

-FIG. V-

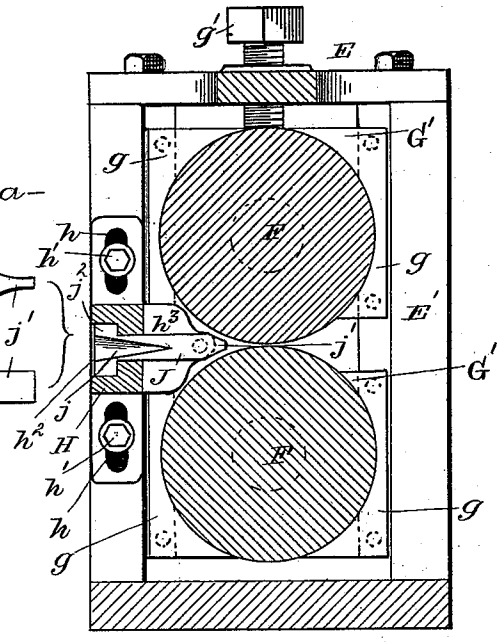

-FIG. VI-

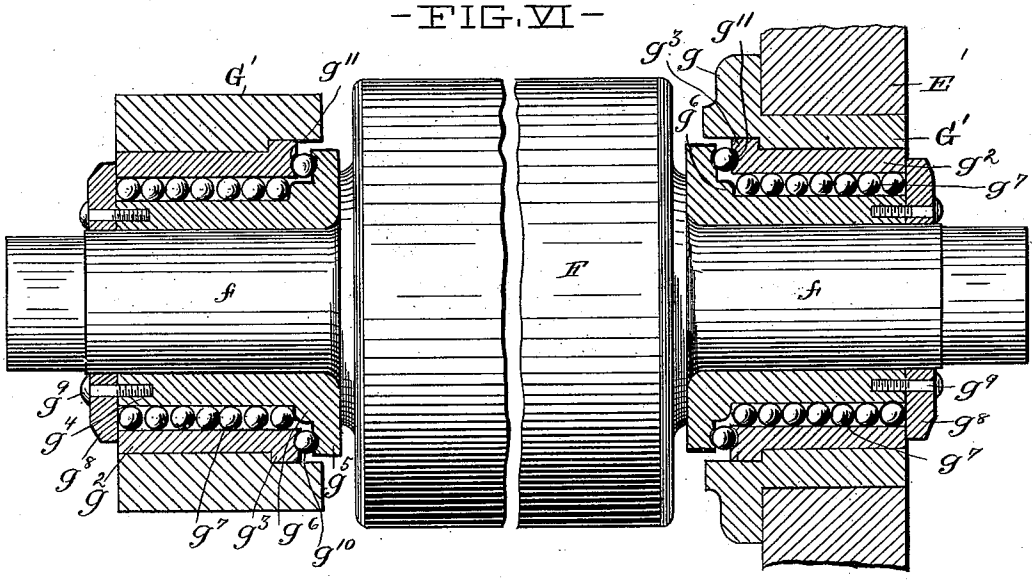

Witnesses,
J. C. Turner
Jm. Secker

Inventor,
L. H. Brightman
By Hall & Fay
Attys.

THE NORRIS PETERS CO., PHOTO-LITHO., WASHINGTON, D. C.

(No Model.) 6 Sheets—Sheet 5.

L. H. BRIGHTMAN.

MACHINE FOR DRAWING WIRE.

No. 564,302. Patented July 21, 1896.

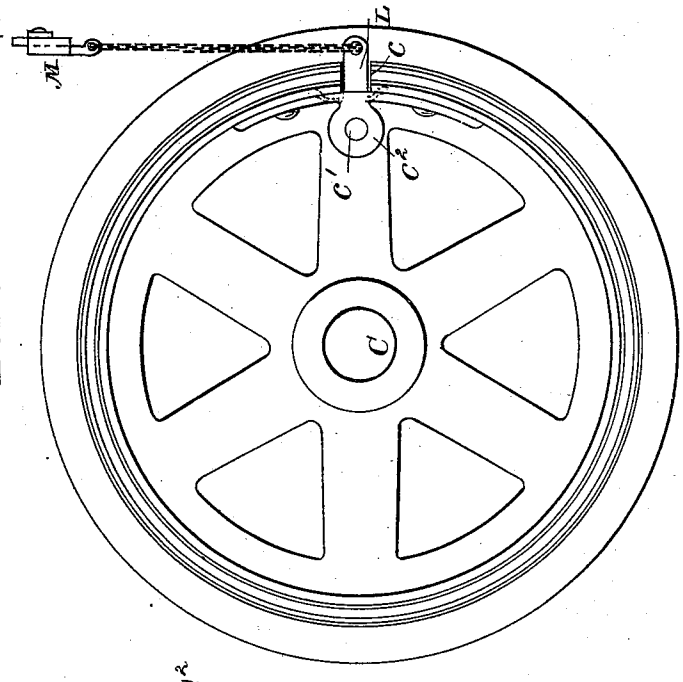

—FIG. VII—

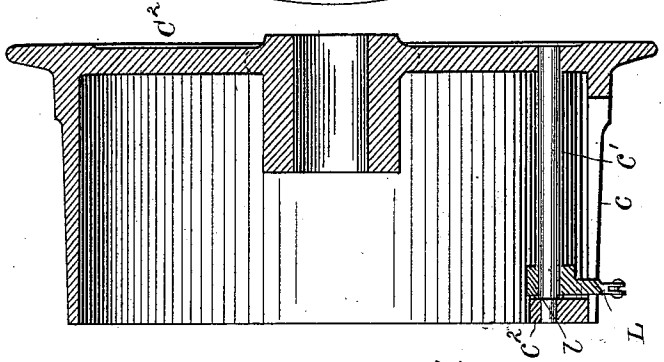

—FIG. VIII—

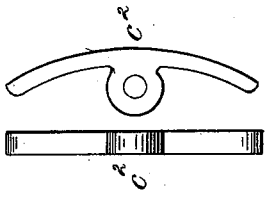

—FIG. IX—

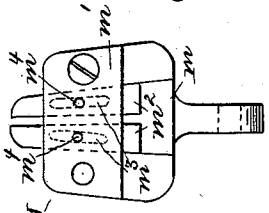

—FIG. XI—

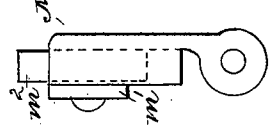

—FIG. X—

Witnesses,

J. C. Turner

Wm. Lecher

Inventor,

L. H. Brightman

By Hall & Fay

Attys.

THE NORRIS PETERS CO., PHOTO-LITHO., WASHINGTON, D. C.

(No Model.) 6 Sheets—Sheet 6.

L. H. BRIGHTMAN.

MACHINE FOR DRAWING WIRE.

No. 564,302. Patented July 21, 1896.

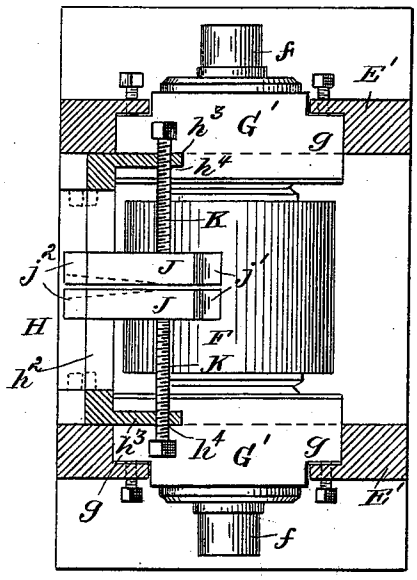

-FIG. XII-

-FIG. XIV-

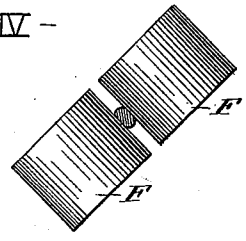

-FIG. XIII-

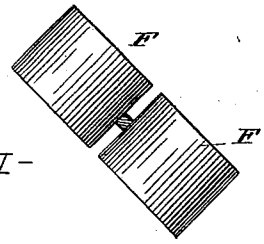

-FIG. XV-

WITNESSES:

J. C. Turner

A. E. Merrick

INVENTOR:

L. H. Brightman

BY Hall & Fay

ATTORNEYS.

THE NORRIS PETERS CO., PHOTO-LITHO., WASHINGTON, D. C.

UNITED STATES PATENT OFFICE.

LATHAM H. BRIGHTMAN, OF CLEVELAND, OHIO.

MACHINE FOR DRAWING WIRE.

SPECIFICATION forming part of Letters Patent No. 564,302, dated July 21, 1896.

Application filed August 4, 1894. Serial No. 519,466. (No model.)

To all whom it may concern:

Be it known that I, LATHAM H. BRIGHTMAN, a citizen of the United States, and a resident of Cleveland, county of Cuyahoga, and State of Ohio, have invented certain new and useful Improvements in Machines for Drawing Wire, of which the following is a specification, the principle of the invention being herein explained and the best mode in which I have contemplated applying that principle so as to distinguish it from other inventions.

In said annexed drawings, Figure I represents a side elevation of my improved wire-drawing machine; Fig. II, a top plan view of the same; Fig. III, an end view of the machine; Fig. IV, a front view of one roll-stand; Fig. V, a vertical section of a roll-stand; Fig. V^a, side and edge views of one bar of a guide; Fig. VI, a sectional detail view of the bearings for the rolls, the left-hand portion of the view illustrating a vertical section of the bearing and the right-hand portion illustrating a horizontal section; Fig. VII, an end view of the block; Fig. VIII, an axial section of the block; Fig. IX, detail views of the bracket within the block; Figs. X and XI, respectively, an edge view and a plan view of the wire-clamp; Fig. XII, a horizontal section of a roll-stand; Fig. XIII, sections of three forms of the wire as it is acted upon when rolled square; Fig. XIV, a view of the rolls giving the wire its preliminary flattening, as indicated in the second section of Fig. XIII; and Fig. XV, a view of the rolls giving the wire its final square shape, as indicated in the third section of Fig. XIII.

The machine has a bed A, upon which are journaled two shafts B and C in bearings a and a'. The shaft B is the drive-shaft of the machine, and has a pulley B′ or other gear for receiving rotary motion and a pinion B^2. Said pinion meshes with a cog-wheel C′ upon the shaft C, which shaft carries a block C^2, upon which the wire is wound, and the detail features of which will later be described.

Two brackets D and D′ are secured upon the bed and have longitudinal grooves or slots d and d' in their inclined faces. The brackets are placed one behind the other and have their faces inclined toward the center line of the part of the bed upon which they are secured at an angle of forty-five degrees to the horizontal plane, so that they will face in opposite directions and will be in planes at a right angle to each other. Housings E are secured with their bases upon the inclined faces of the brackets, so as to be adjusted in their relative positions upon such faces by means of bolts or similar fastenings entering the grooves or slots in the faces of the brackets. Rolls F are journaled in antifriction-bearings G—to be more fully described later—in said housings, so that the axes of the rollers will be at right angles to each other and so that their passes will be in a straight line which will strike the periphery of the block.

The side pieces E′ of the housings are longitudinally slotted, and boxes G′ having laterally-projecting flanges g are fitted to move longitudinally in the slots, set-screws g' bearing against the upper boxes to set the rolls at their proper positions. The boxes have cylindrical bores in which hardened bushings g^2 fit, said bushings having flanges g^3 at their inner ends and fitting into corresponding rabbets in the bores of the boxes. Thimbles g^4 of hardened metal fit upon the journals f of the rolls, and said thimbles are formed at their inner ends with flanges g^5 having shoulders g^6 upon their outwardly-facing sides. Antifriction-balls g^7 are placed between the thimbles and the bushings, and balls g^{10} are placed between the flanges of the thimbles and the flanges of the bushings, said last-mentioned balls resting upon the shoulders of the thimbles and being retained in grooves g^{11} in the flanges. The balls are confined from escape at the outer ends of the bushings and thimbles by means of rings g^8, secured to the ends of the thimbles by screws g^9. The journals of the rolls fit within the thimbles, which latter revolve with reduced friction within the balls and bushings, so that the rolls will meet with a minimum of frictional resistance to their rotary motion. The balls g^{10} serve to remove frictional resistance during endwise movements of the rolls.

An H-shaped guide-support H has longitudinal slots h in its end pieces, through which slots pass screw-bolts h' into the side pieces of the housings, so that the support may be adjusted up or down upon the housing, according to the position of the rolls within the same. The cross-piece of the

guide-support has a rabbeted longitudinal slot h^2, and lips h^3 project inward from the middles of the end pieces and have screw-threaded holes h^4 in them. A guide is composed of a pair of bars J J, formed with flat sides having widening round grooves j in their outer portions and with pointed inner ends j', which may enter between the forward portions of the rolls. The outer ends of the guide-bars have shouldered enlargements j^2, which may fit and slide in the rabbets of the slot in the cross-piece of the guide-support, and the inner ends of screw-bolts K, which fit in the threaded holes h^4, bear against the inner portions of the guide-bars and adjust the position of the latter in relation to the rolls and in their relative position. The block is formed with a longitudinal slot c, and a rod c' is secured in the inner head of the block parallel to said slot and has its outer end supported by a bracket c^2 secured to the inner side of the drum portion of the block at the edge of the same. An arm L has a perforated head l, with which it slides upon the rod, and said arm projects through and slides in the slot of the block and has a clamp M attached to a flexible connection to its outer end. The body of said clamp has an outwardly-converging way or recess m in one face, which is covered by a plate m', and two wedge-shaped jaws m^2 slide in said way, having longitudinal slots m^3, with which they slide upon pins m^4 secured through the plate and the bottom of the converging way.

The above-described clamp attachment to the block admits of the end of the wire being caught by the clamp and held by the same for the entire length of wire drawn and reeled upon the block without the necessity of removing the end of the wire from the clamp and otherwise securing the end, as the clamp will travel outward with the arm, sliding upon the rod and in the slot of the block as the bundle coiled upon the block increases in width. As the bundle springs open when the drawing strain is released, and consequently will have a greater internal diameter than the exterior diameter of the block, and as said block tapers outward, the clamp will offer no obstruction to the easy removal of the bundle from the block.

My machine is adapted to the making of square wire or rods.

The first stand of rolls consists of two flat-faced rolls.

In practice the end of the rod to be drawn into wire is reduced so as to be capable of passing through the rolls and to be grasped by the wire-clamp upon the block, or the rolls are sufficiently separated to pass the end of the rod through them, whereupon they may be again tightened to the proper positions for the required reduction. In the latter case the first end of the bundle upon the block will form waste, and must be cut off if a perfect bundle of wire is desired. When power is applied to revolve the drive-shaft and the block, the rod is drawn between the rolls. The first stand of rolls imparts compression to the rod from two opposite directions and produces a flattened rod with round edges. As the second stand of rolls is at right angles to the first stand, the flattened rod will be presented edgewise to the second stand of rolls, and will receive its compression from two opposite directions at right angles to the directions from which it received its first compression.

Heretofore the only practically successful way of reducing metal rod to wire has been by drawing the rod through dies in the draw-plate. The rod has required previous pickling and cleaning, as well as annealing between successive reductions. This drawing through dies and annealing the wire has affected the texture of the metal in the rod and wire, and has, particularly in the case of steel rod and wire, caused the stock to lose its temper and to become soft and yet brittle, and to be less fit for manufacture into wire nails. It has been proposed to draw wire between rolls, but this has proven itself as an impractical method, as the rolls were not provided with antifriction-bearings and would move with too much friction upon their journals, so that the wire would tear and the reduction would be very uneven. Cold rolling by means of positively-driven rolls has been tried; but, while a hot metal rod will be easily reduced by such rolling on account of the soft condition of the metal, cold metal is too hard and unyielding to be reduced in diameter and increased in length while being fed through rolls by the forward crowding of the stock by the rolls.

In my machine the elongation of the rod and the reduction in diameter of the same is aided by the drawing action upon the stock, and the rolls are journaled to revolve with so slight a frictional resistance that the stock will freely pass between the rolls, and will undergo considerable reduction at one pass without undue strain upon the metal.

Besides the advantage gained by the reduction of frictional resistance to the journals of the rolls in my improved machine, my improved means for exerting reducing pressure upon the stock from two opposite sides alternately from directions substantially at right angles to each other will render the diametrical reduction and longitudinal expansion easy and beneficial to the fiber of the metal, the skin of the stock remaining unbroken and the elongation of the stock being so gradual that the stock may be taken immediately from the mill and be reduced six or more gages in about two passages through the machine without prior pickling or cleaning, and without annealing. The finished stock will be hard and tough on account of the diametrical compression it has received.

As the bushing, balls, and thimble of each antifriction-bearing are all connected together so as to form a separate structure

which may be removed from the roll-journal and box as a whole, journals of different diameters may be accommodated in the same boxes by providing bearings having thimbles of different interior diameters suitable for the journals, but all fitting into the same size bore of the box. The antifriction-balls g^7 cannot fall out of the bearings, as they are retained by the shoulder g^6 of the bushing and the ring g^8, and the end-thrust balls g^{10} are confined by the grooves g^{11} in the flanges of the thimble and bushing.

I therefore particularly point out and distinctly claim as my invention—

1. In a machine for drawing wire the combination with a drum C^2 for drawing the stock, of two stands of parallel flat-faced rolls F through which the wire is drawn, the axes of the rolls in one stand being at right angles to the axes of the rolls in the other stand, substantially as set forth.

2. The combination of a thimble, a bushing, antifriction-balls in the space between said thimble and bushing, and a ring secured to the end of the thimble to cover the end of the ball-space and admit of the thimble, bushing and balls being detached from the spindle as one structure, substantially as set forth.

3. The combination with a pair of rolls and their housing, of a guide-support secured between the sides of the housing and formed with inwardly-projecting lips and with a slot registering with the space between the rolls, guides projecting through the slot, and screws adjustably passing through the lips and bearing with their inner ends against the guides to adjust their relative positions and their positions in the slot, substantially as set forth.

4. In a machine for drawing wire, the combination of a block formed with a slot in its circumference parallel with the axis of the same, a rod secured parallel with the slot and inside of the circumference of the block, an arm having a perforated head which slides upon the rod and projects through the slot to slide in the same, and a wire-clamp attached to the outer end of the arm, substantially as set forth.

5. In a machine for drawing wire, the combination with means for drawing the stock, of a pair of flat-faced rolls through which the stock first is drawn and a pair of rolls placed with their axes at right angles to the axes of the first pair of rolls and through which the stock subsequently is drawn, substantially as set forth.

In testimony that I claim the foregoing to be my invention I have hereunto set my hand this 26th day of July, A. D. 1894.

LATHAM H. BRIGHTMAN.

Witnesses:
WM. SECHER,
DAVID B. DAVIES.