OPIC
Office de la propriété intellectuelle du Canada

CIPO
Canadian Intellectual Property Office

(12) (19) (CA) **Demande-Application**

(21) (A1) **2,229,522**
(22) 1998/04/15
(43) 1999/10/15

(72) INKPEN, Thomas Randall, CA
(72) WILLIAMSON, Laura Jean, CA
(71) INKPEN, Thomas Randall, CA
(71) WILLIAMSON, Laura Jean, CA

(51) Int.Cl.[6] A61M 5/46

(54) **AIDE-AIGUILLE**

(54) **NEEDLE AID**

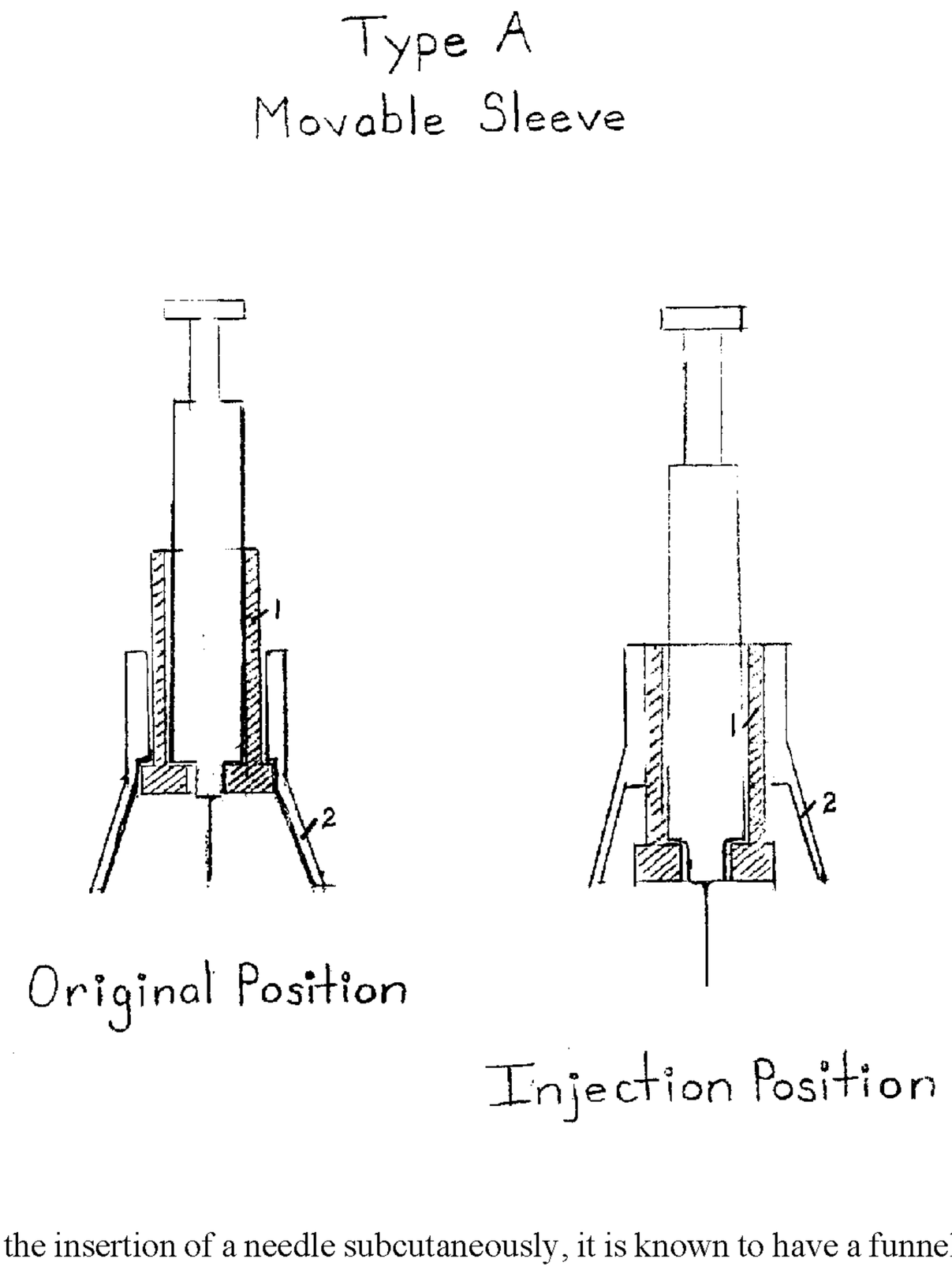

(57) In a device to aid in the insertion of a needle subcutaneously, it is known to have a funnel-shaped outer casing with a spring controlled inner sleeve which, when depressed, allows for insertion of the needle and injection of the medication, then released, with extraction of the needle. Various sized inserts may be used within the sleeve to adapt it to different sizes of syringes. The device will assist those unable, or unwilling, to administer medication by means of injection.

ABSTRACT

In a device to aid in the insertion of a needle subcutaneously, it is known to have a funnel-shaped outer casing with a spring controlled inner sleeve which, when depressed, allows for insertion of the needle and injection of the medication, then released, with extraction of the needle. Various sized inserts may be used within the sleeve to adapt it to different sizes of syringes. The device will assist those unable, or unwilling, to administer medication by means of injection.

SPECIFICATIONS

This invention relates to a manually operable device intended as an aid in the injection of medication by means of a hypodermic syringe or medication pen.

The difficulty in the use of a syringe or medication pen is the insertion of the needle into the skin. This is compounded in individuals who are visually impaired, are lacking in fine motor control, in children learning to administer their own medication (e.g. insulin) or in individuals with an aversion to needles and injections.

The difficulties of needle insertion will be overcome by means of a broad based device which stabilizes and shields the needle. The visually impaired or unsteady individual can easily determine a particular location for injection while ensuring a 90 degree entry and reducing the possibility of a bent syringe needle, and those unwilling to give themselves an injection will be unable to see the needle enter the skin. Because of the exact dimensions of the base, an exact site for needle insertion can be determined for use in treatment or investigation. The angle of needle insertion can be altered by angling the base of the outer casing and inner sleeve to allow for a 45 degree angle of injection. The placement of the device will also indicate the site to be wiped by an alcohol swab following an injection.

The device illustrated as "Type A" comprises an inner sleeve 1 which is adapted to slide freely up and down within an outer broad based, funnel-shaped casing 2. The vertical movement is regulated by a spring 3 on either side of the device, set within the wall of the outer casing 2. Each spring is held in place by means of a pin 4 which is inserted into the outer wall of the inner sleeve. When downward pressure is applied, these pins slide in two grooves in the inner wall of the outer casing depressing the spring. When pressure is released, the springs return the inner sleeve to its original position. Adaptors 5 may be inserted within the inner sleeve to accommodate an insulin syringe or a 3 cc. syringe.

In the embodiment shown in type A1, a coiled spring 6 is used around the upper portion of the inner sleeve 1, held in place by an adjustable ring 7 attached above the spring for the purpose of tension control.

In the embodiment shown in Type B, the device is a one piece bell-shaped fixed sleeve which can facilitate adaptors.

Any of the above devices may be fabricated from either metal or heat resistant plastic.

"The embodiments of the invention in which an exclusive property or privilege is claimed are defined as follows:"

1 A manually operable device used to stabilize a hypodermic syringe or medication pen during medication administration, comprising a funnel-shaped outer casing, a sliding inner sleeve which is held in place by two small cylindrical springs located within the wall of the outer casing and two small pins located in the outer wall of the inner sleeve.

2 A device as defined in claim 1 in which the guide is angled to accommodate a 45 degree insertion of the hypodermic syringe.

3 A device as defined in claim 1 or claim 2 in which the inner sleeve contains appropriate sized adaptors to accommodate various sizes of syringes e.g. insulin, 3 cc. etc.

4 A device as defined in claim 1, claim 2, or claim 3 in which the dimensions of the apparatus are enlarged proportionately to accommodate larger syringes.

Figure 1

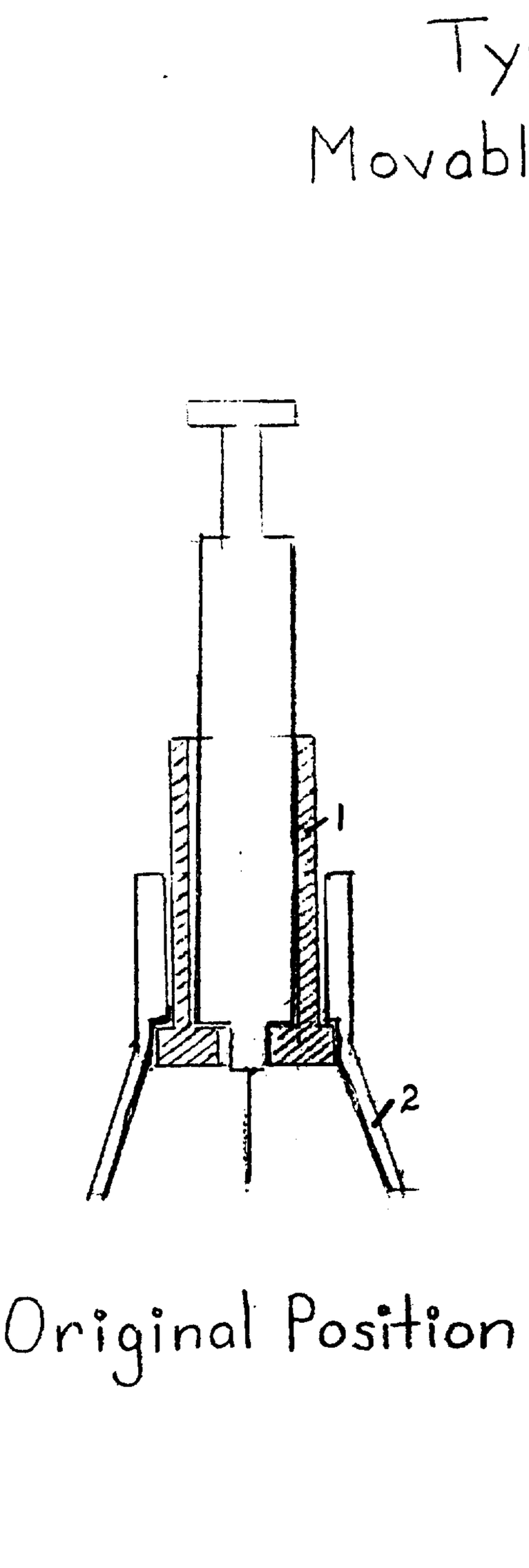
Type A
Movable Sleeve
1
2
Original Position
1
2
Injection Position

Figure 2

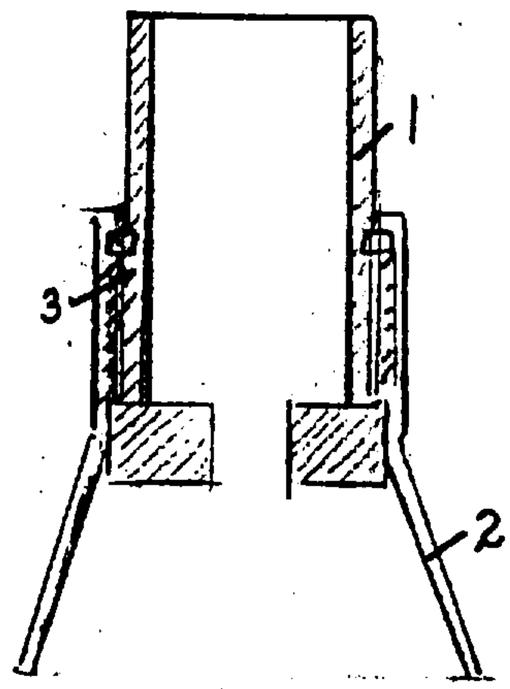

Normal Position

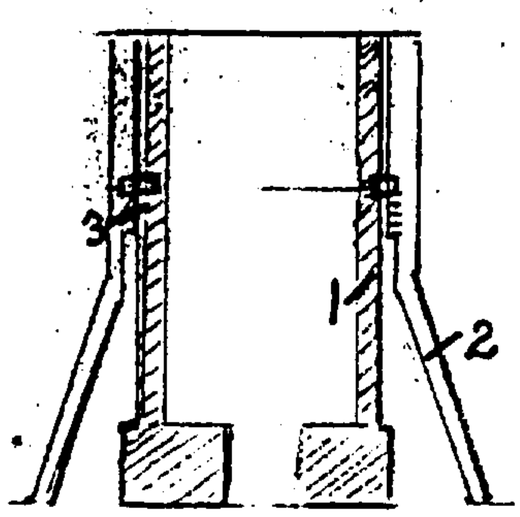

Compressed Position

Figure 3

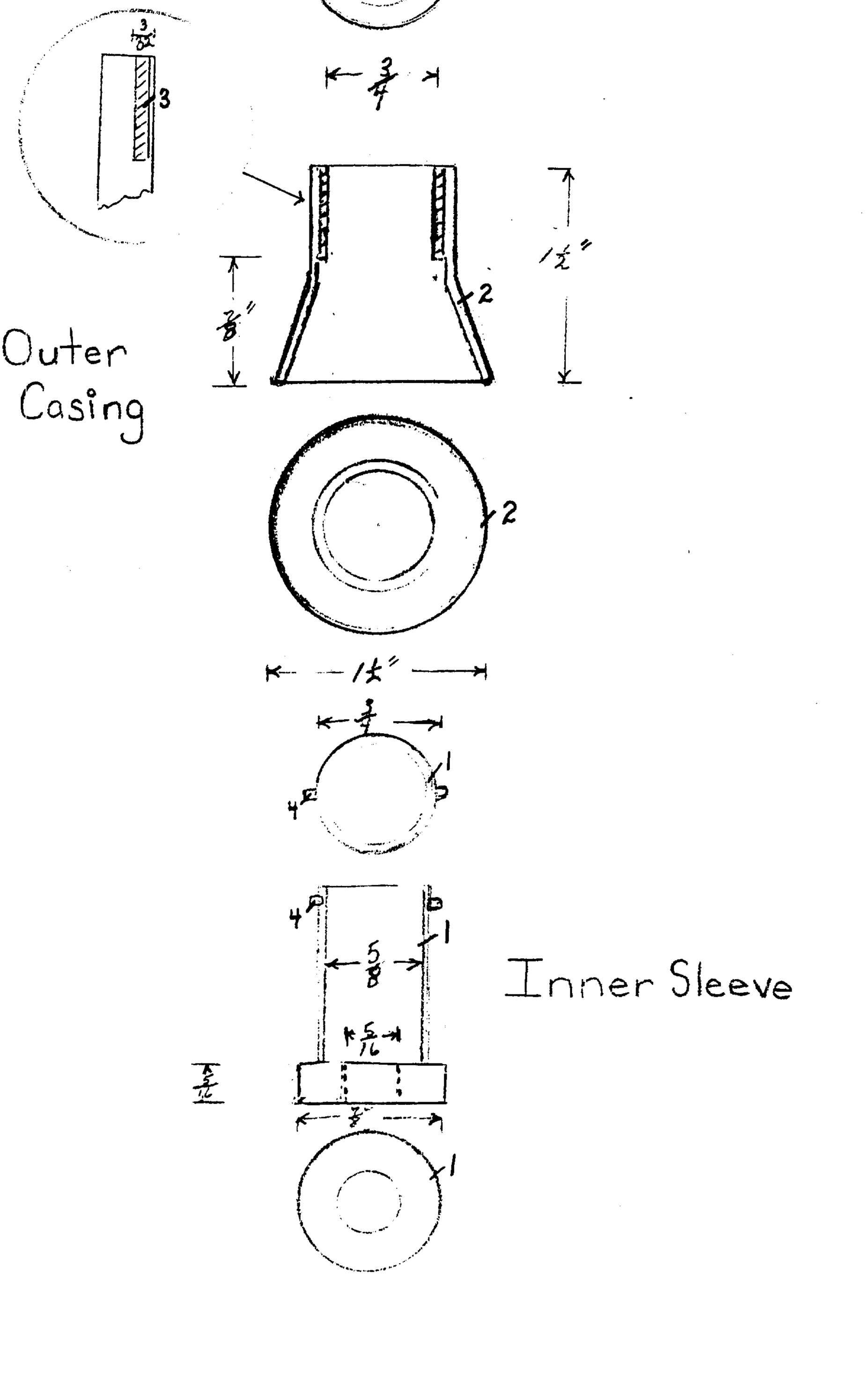

Outer Casing

Inner Sleeve

Figure 4

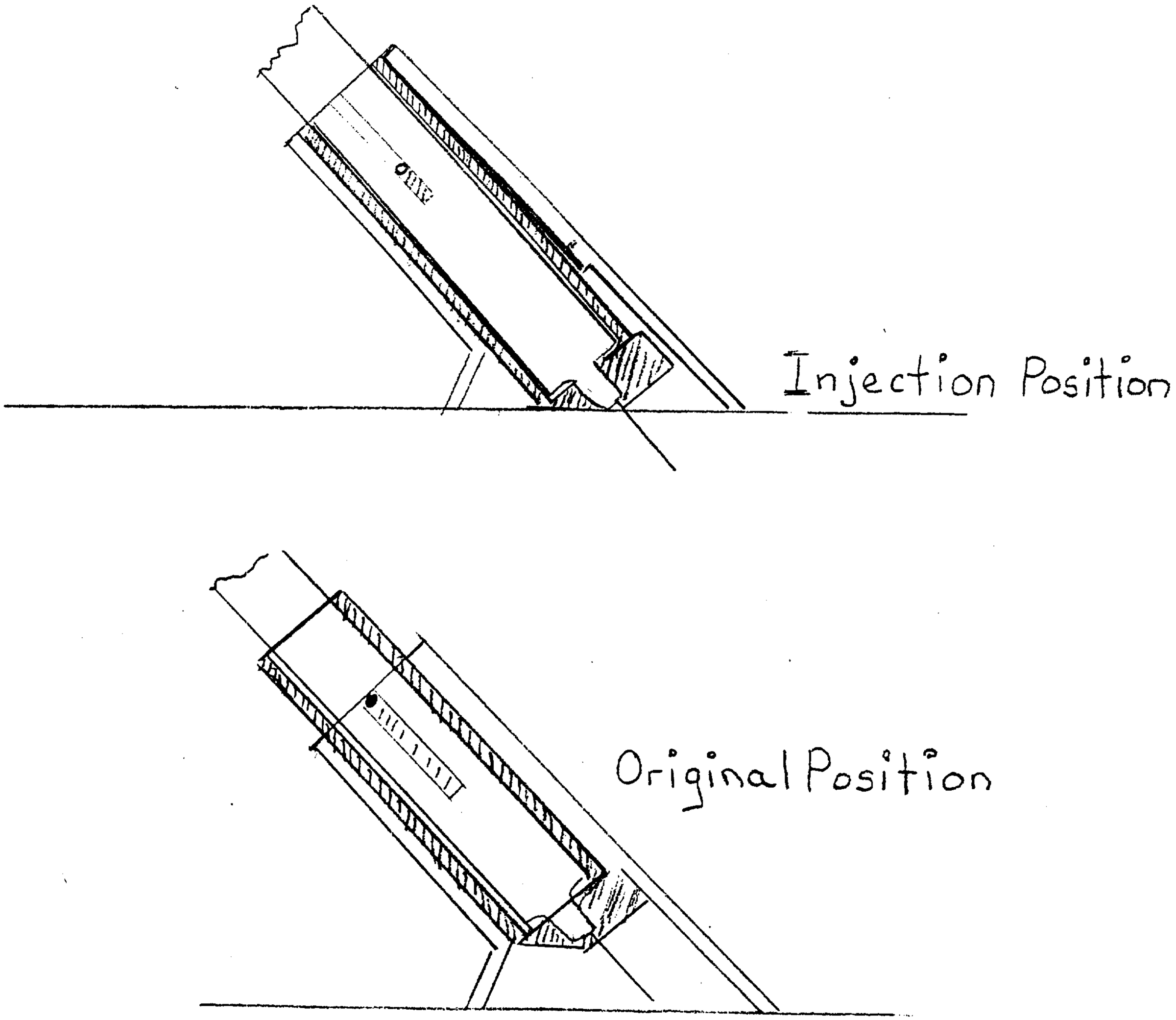

Figure 5

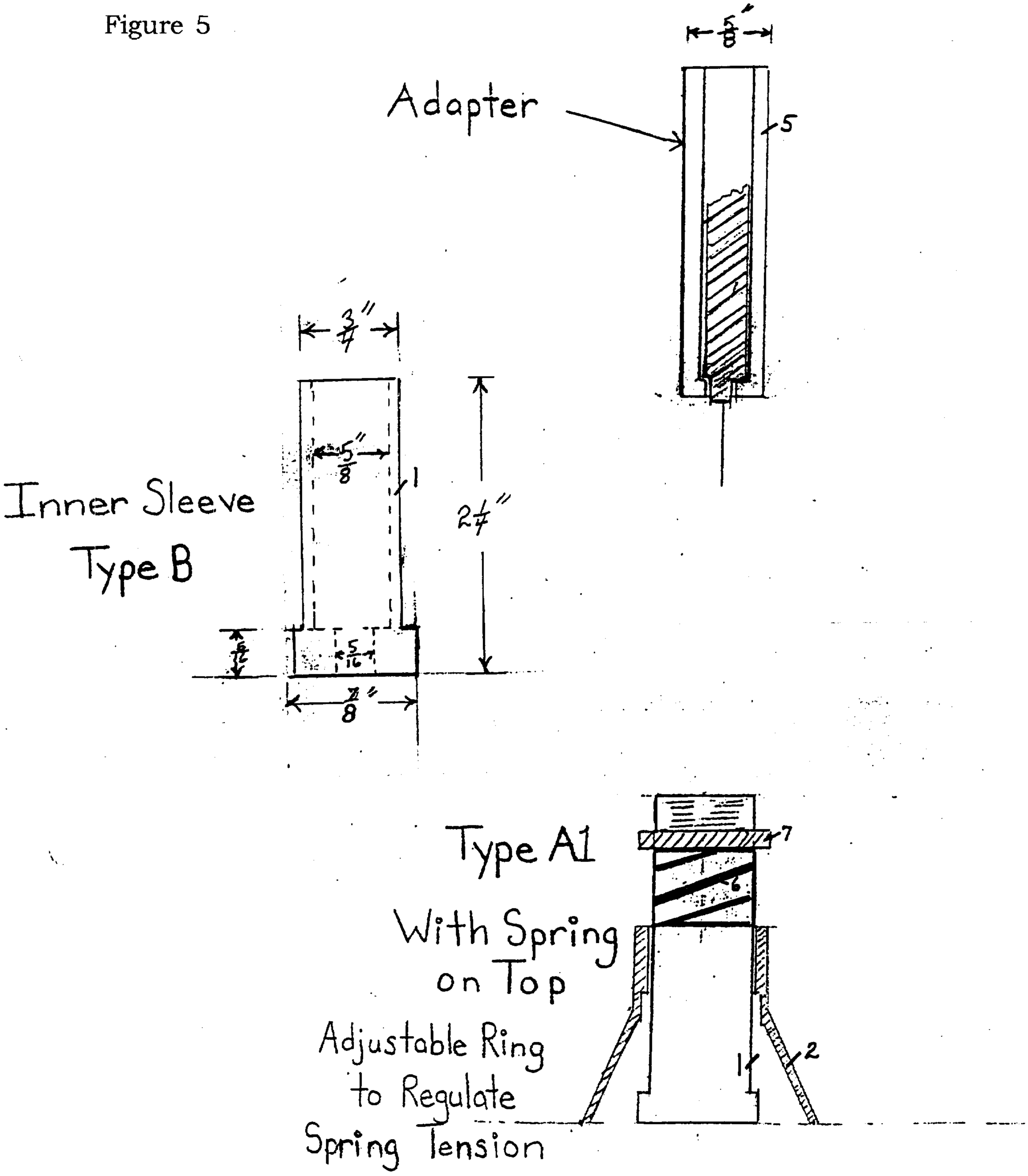
Adapter
5/8"
5
Inner Sleeve
Type B
3/4"
5/8"
1
2 1/4"
1/2"
5/16"
7/8"
Type A1
With Spring
on Top
Adjustable Ring
to Regulate
Spring Tension
7
6
1
2

Figure 6

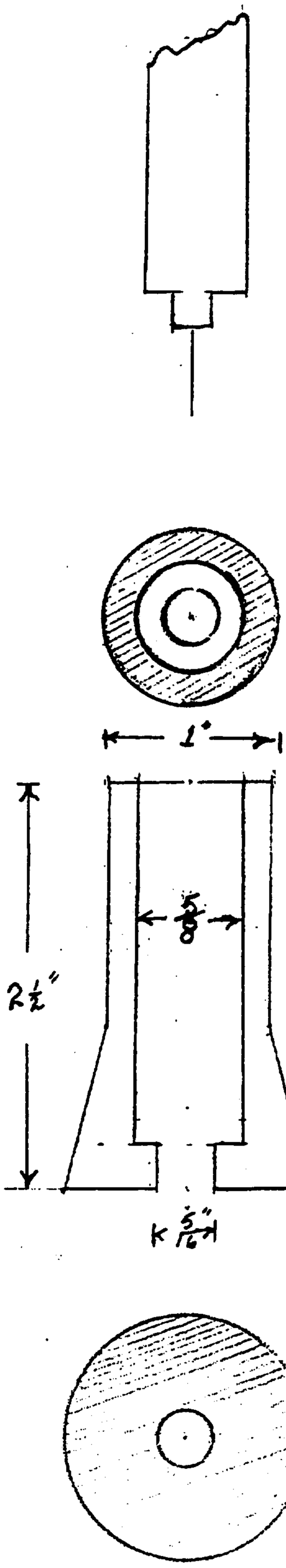

Type B
Fixed Sleeve