H. BESSER.

PULVERIZING MACHINE.

APPLICATION FILED NOV. 11, 1907.

909,275.

Patented Jan. 12, 1909.

2 SHEETS—SHEET 1.

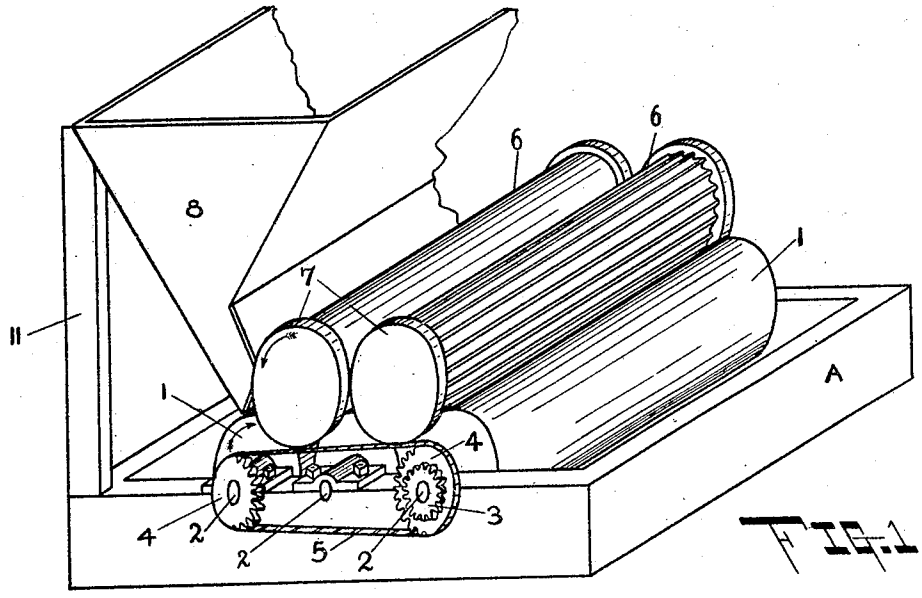

FIG. 1

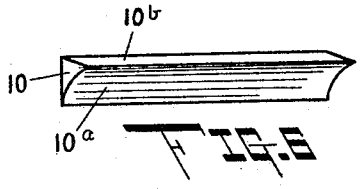

FIG. 5

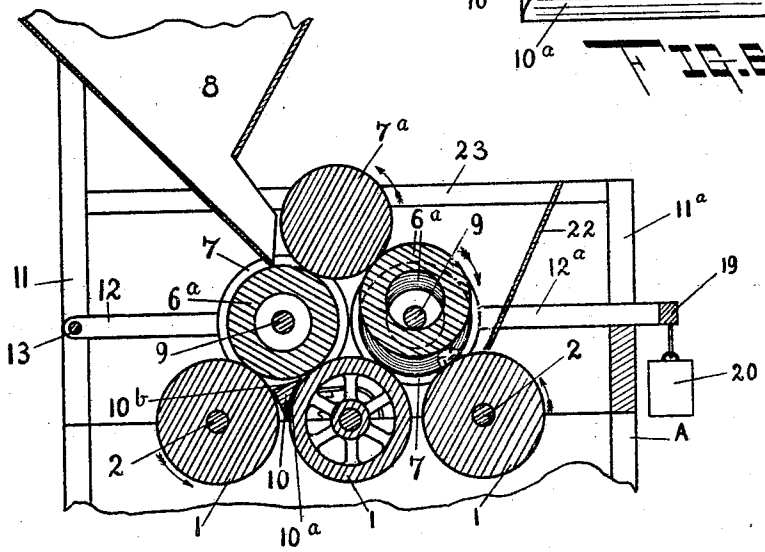

FIG. 3

WITNESSES:

J. Ray Abbey

Ralph S. Warfield

INVENTOR

Herman Besser

BY

Geo. B. Willcox

ATTORNEY

THE NORRIS PETERS CO., WASHINGTON, D. C.

H. BESSER.

PULVERIZING MACHINE.

APPLICATION FILED NOV. 11, 1907.

909,275.

Patented Jan. 12, 1909.

2 SHEETS—SHEET 2.

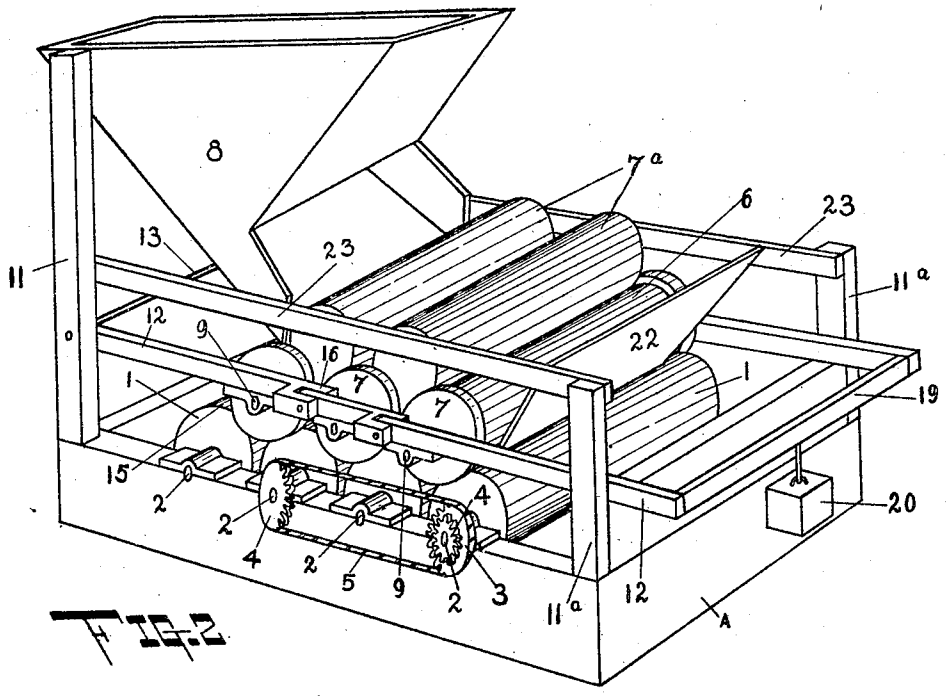

FIG. 2.

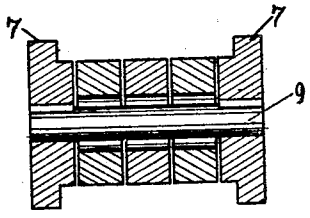

FIG. 7.

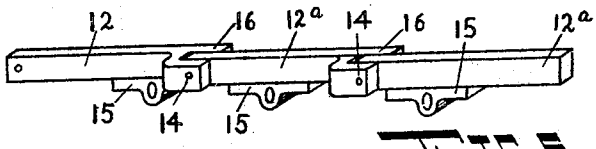

FIG. 5.

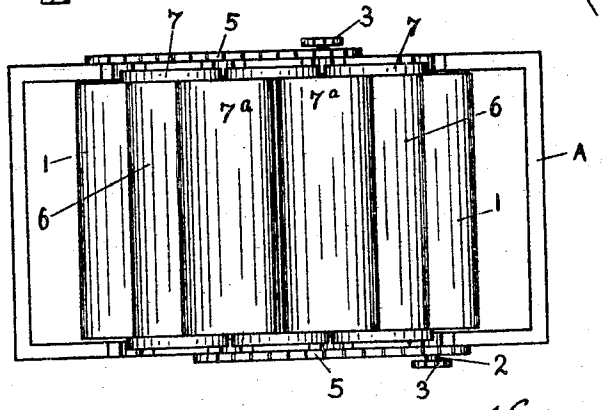

FIG. 4.

WITNESSES:

J. Ray Abbey

Ralph S. Warfield.

INVENTOR

Herman Besser

BY

Geo. B. Willcox

ATTORNEY

THE NORRIS PETERS CO., WASHINGTON, D. C.

UNITED STATES PATENT OFFICE.

HERMAN BESSER, OF ALPENA, MICHIGAN.

PULVERIZING-MACHINE.

No. 909,275. Specification of Letters Patent. Patented Jan. 12, 1909.

Application filed November 11, 1907. Serial No. 401,723.

To all whom it may concern:

Be it known that I, HERMAN BESSER, a citizen of the United States, residing at Alpena, in the county of Alpena and State of Michigan, have invented certain new and useful Improvements in Pulverizing-Machines; and I do hereby declare the following to be a full, clear, and exact description of the invention, such as will enable others skilled in the art to which it appertains to make and use the same.

My invention relates to pulverizers and more particularly to that class of pulverizers wherein the material is fed to and drawn between a series of rotating rolls carried by a suitable support.

One object of the invention is the provision of a simple easily-operated machine which will quickly and effectually comminute the material fed thereto with the use of comparatively low power.

Another object is the provision of means whereby a lump of refractory material may be passed through the machine without so acting upon the rolls as to prevent the grinding of the finer material.

A further object is the provision of means whereby the material is subjected to a heavy crushing force and yet in the event of a lump of refractory material entering the machine, the rolls are adapted to yield to avoid the strain on the journals.

A still further object is the provision of means for preventing displacement of the superposed rolls while permitting them to yield.

Still another object is the provision of means for rendering the machine, when worn, capable of finely pulverizing the material fed thereto.

Another object of my invention is the provision of means whereby the material may continuously travel two or more times through the machine before being discharged in order that the material may be finely pulverized.

To these and other ends, my invention consists in certain novel features and combinations, such as will be more fully described hereinafter and particularly pointed out in the claims.

In the accompanying drawings, Figure 1 is a perspective view of one form of my invention; Fig. 2 is a similar view showing additional mechanism applied thereto; Fig. 3 is a vertical sectional view through a machine similar in construction to that shown in Fig. 2; Fig. 4 is a top plan view showing the use of several base rolls; Fig. 5 is a detail view of a connecting arm; Fig. 6 is a detail view of a wear compensating device; and Fig. 7 is a cross-sectional view of a sectional roll.

(A) indicates a supporting frame of any suitable design and length to accommodate the number of rolls used. I have illustrated the machine as being provided with three base or supporting rolls, but it is evident that two base rolls only might be employed or any larger number, depending upon the degree of fineness to which the material is to be ground. The rolls may be plain or corrugated either longitudinally or peripherally. Any number of base rolls (1), (1), may be journaled in the frame, the shafts (2) of the first and second rolls of the series being driven in any suitable manner, as by drive sprockets (3), the latter being secured to the shaft. The shafts of all the rolls are also equipped with sprockets (4) around which pass the chains (5). Any other suitable method of imparting motion to be the base rolls may be used, whereby they are all driven in the same direction.

In my invention I drive all the rolls in the lower tier in one direction and thus rotate the rolls on the tier above by friction in the opposite direction. By driving each tier of rolls in one direction, the lower tier toward the left, the next tier toward the right, the third tier toward the left, and so on, the material is ground between the rolls of adjacent tiers and not between rolls of the same tier, and it is impossible for hard lumpy material to get in between individual rolls of the same tier.

The base or lower tier of rolls may be hollow if desired to decrease their weight, care being taken to make them sufficiently strong, however.

Mounted or placed loosely upon the base rolls and received between the convex peripheries at the interstices between each two adjacent rolls, are the loose rolls (6) (6), provided at their ends with the flanges (7) (7) adapted to take against or embrace the ends of the base rolls to prevent or limit the endwise movement of the loose superposed rolls. The rolls (6) may be either solid in one piece or composed of sections mounted on a connecting shaft (9), as in Figs. 3 and 7. In the latter event, the end sections of the roll are provided with flanges (7) fast there-

with, the end sections being preferably keyed to the shaft (9).

It is obvious that I may place other loose rolls (7^a) on top of the superposed rolls (6), as shown in Figs. 2 and 3, and continue to place horizontal series or tiers of rolls on top of each other until the apex of the pyramid is reached, such additional rolls being either solid or sectional as desired. The loose rolls add considerably to the crushing force brought to bear on the material being pulverized and yet at the same time will yield to permit the passage of a refractory lump of material between the adjacent tiers of rolls.

In using the rolls two-high, shown in Fig. 1, as when grinding fine material, the material is fed into a chute (8) at the receiving end of the machine and discharged onto the first roll (1), which will draw the material in between itself and the first of the series of loose rolls (6), crushing the material and allowing the finer particles thereof to drop down through the space between the two adjacent base rolls, the coarser particles being passed on between the next two upper and lower rolls and so on through the machine. The superposed loose rolls have two points of contact and operate to finely pulverize the material in the shortest possible time, the loose rolls being frictionally driven in a direction reverse to that in which the base rolls travel, and prevented from displacement by the flanges (7) on the end sections which are fast on the shaft.

If the loose rolls are solid and a refractory lump passes between the loose rolls and the base rolls, it will operate to raise the loose rolls which, as they rise, bring a tremendous crushing pressure to bear on the refractory lump. However, by so rising, the solid roll permits finer particles to pass between it and the lower roll unground, to obviate which, I may make the superposed roll of sections, as at (6^a) (6^a) in Figs. 3, and 7, so that when a refractory lump passes between the upper and lower rolls only one section of the upper roll will be raised, the remaining sections keeping their normal position to grind the finer material.

All the roll sections except the end sections are provided with large bores through which the shaft (9) of considerably less diameter passes to permit this vertical play of the sections relative to each other. The flanges (7) are fixed on the ends of the end rolls which end rolls are keyed or otherwise secured to the shaft (9) to prevent or limit endwise or longitudinal movement of the roll sections. Also a slight amount of grinding will take place between the end faces of each two loose sections as they move vertically relative to one another and the raised section will move slower than the sections engaging the base rolls. The end sections resting upon the base rolls operate to keep the intermediate sections free from the shaft, such intermediate sections engaging the shaft only when large hard lumps pass under any of them, to force them upward. Ordinarily, the intermediate roll sections rest loosely on the lower rolls and run clear of the shaft.

In a pulverizer of this style, it is obvious that the peripheries of all the rolls will become worn down. Such wearing of the loose rolls is of comparatively little consequence, as they will maintain their psoitions on the base rolls and may be used until they have nearly worn away, or they may be replaced from time to time, as desired. The wearing away of the base rolls, however, is more serious, as unless compensated for in some manner, the spaces between each two rolls will allow coarse material to drop therethrough and hence render the machine ineffective. To prevent this result, I preferably provide filling-in pieces (10) (10) having a length at least equal to the length of the parallel rolls and being of a substantially triangular shape in cross section, although one side (10^a) is curved to conform to the curvature of the roll against which it contacts. These filling-in pieces are placed in the interstices between each two base rolls, with one angle or corner depending downward, as shown, and the upper face (10^b) arranged on an incline, the member normally and automatically assuming this position when it is placed between and supported by the rolls, the inclined face adapted to shunt the material from one roll to the next and prevent it from falling down between the rolls. Of course grinding takes place between the roll and the curved surface (10^a) of the member.

In operating a three-high machine, I find that the intermediate tier of rolls is liable to be accidentally thrown off the machine when refractory lumpy material is being fed thereto, because the weight of the upper tier of rolls resting upon the intermediate tier will force them apart if any unusual separation between the individual rolls of the intermediate tier takes place, by reason of their yielding to let the hard lumps pass beneath, to avoid which displacement I preferably utilize the following arrangement: Projecting upward from the frame (A) are the standards (11) (11^a), braced in any suitable manner. Connecting arms (12) mounted on a shaft (13), journaled at its ends in the standards (11) project horizontally toward the shaft (9) of the foremost roll of the first intermediate series of rolls (6). The outer ends of the arms (12) are preferably Y-shaped to receive the adjacent ends of the next side arm (12^a), the yokes carrying the pins (14) (14) which pass through the adjacent ends of the side arms (12^a) to pivotally connect them with the connecting arms (12). Boxes (15) on the arms (12) and (12^a) in front of the yokes

(16) are adapted to receive the ends of the shafts (9) of the loose rolls (6). It is obvious that there are as many side and connecting arms on each side of the machine as there are shafts (9). The last side arm on each side of the machine is not provided with a yoke, but the free ends of such arms may be connected by a space-bar (19) and are received between the standards (11ª). If desired, in order to obtain a greater crushing power, a weight (20) may be suspended from the spacing bar (19), such weight permitting the rolls to be raised by intervening lumps of refractory material.

It is obvious that when a lump of refractory material passes between the loose rolls (6) and the base rolls (1), as shown in Fig. 3, it will raise the successive loose rolls to accommodate which motion, the arms (12) (12ª) are pivotally connected, to allow the rolls to yield upwardly. Furthermore, the loose rolls may be given an impulse tending to throw them out of their respective beds between the base rolls, but the arms will permit only a limited lateral movement of the roll not sufficient to throw it entirely out of its bed and such strain is transmitted as a pulling strain on the arms (12) and (12ª), thus preventing the weight of the rolls from being thrown against the arms (12).

In using a machine of three-high rolls, the material is fed in at the rear end of the machine between the intermediate loose rolls (6) and the superposed loose rolls (7ª) in any convenient manner, as by means of a hopper (8), the material passing in a general horizontal direction between the series of rolls (7ª) and the intermediate loose rolls (6), until it is finally discharged over the last loose rolls (6), onto the first base roll (1) of the series, the material being drawn in between the series of intermediate rolls (6) and the base rolls (1) and passing in a reverse generally horizontal direction back to the discharge end of the machine. In order to insure that the material will be drawn in between the base rolls (1) and the loose rolls (6), I may provide a guard (22) at the forward end of the machine to prevent the material discharged from between the loose rolls (7ª) and intermediate rolls (6) from being shot over the first roll (1).

Plainly, material can be simultaneously fed to the rolls (6) and (7ª) and (6) and (1), through the chute (21) and guard chute (22) if desired. Also it is obvious that a number of changes and combinations is possible by adding superposed series of rolls until the machine is four or five rolls high or any other desired number.

It is sometimes desirable to prevent the possibility of endwise movement of the superposed rolls (7ª) to which end I may provide the braces (23) which not only prevent endwise movement of the rolls, but also support and strengthen the standards (11) (11ª).

The loose rolls (7ª) are normally prevented from endwise movement by the flanges (7) of the intermediate rolls.

While I have shown but two intermediate rolls (6) and one superposed roll (7ª), it is obvious that I might employ several more as indicated in top plan view in Fig. 4.

The base rolls are preferably driven from alternate sides respectively, as shown in Fig. 4, to equalize the strain. In three-high or more machines, the successive passage of the material back and forth between each succeeding lower series of rolls operates to most finely pulverize it, and the more tiers of rolls used, the finer is the material pulverized. I may provide a casing, not shown, to confine the dust arising when the machine is in full operation. Each series of rolls, save the base rolls (1), may be made sectional if desired.

Having thus fully disclosed my invention, what I claim as new is—

1. A pulverizing machine comprising a plurality of base rolls, an upper roll loosely resting between the adjacent convex surfaces of the base rolls, and means loosely received between the adjacent convex faces of the base rolls and supported entirely by the base rolls, such means located beneath the upper roll and adapted to compensate for the wear of the base rolls, and provide a grinding surface coöperating therewith.

2. A pulverizing machine comprising a series of horizontally-arranged rotatable base rolls, means for rotating the rolls, an intermediate series of rolls loosely and wholly supported on and received between the upper adjacent convex surfaces of each two base rolls, and a second series of rolls loosely superposed upon the intermediate series of rolls, every alternate series of rolls rotating in the same direction, each two adjacent series of rolls rotating in opposite directions, the individual rolls of each series rotating in the same direction.

3. A pulverizing machine comprising a frame, a series of horizontally-arranged base rolls mounted in the frame, a second series of rolls loosely resting upon the base rolls, shafts carried by the loose rolls, a series of loosely connected arms pivotally connected to the frame at one end, and boxes on the arms.

4. A pulverizing machine comprising a suitable support, a series of base rolls rotatably mounted in the support, a second series of rolls loosely mounted upon the base rolls and capable of yielding upward relative to the base rolls, shafts carried by the loose rolls, a series of loosely connected arms, one end of the series being pivotally connected to the support, the arms extending past the ends of the loose rolls, and a box carried by each arm to receive the shafts of the rolls, the free ends of the series of loosely connected

arms being received between and guided by the support, and means coöperating with the series of loosely connected arms to increase the pressure brought to bear by the loose rolls.

5. A pulverizing machine comprising a plurality of base rolls, a roll loosely mounted upon and wholly supported by the base rolls, a shaft for the loose roll, arms to which the shaft is journaled, the arms at one end pivotally connected to the frame of the machine, and a weight connected to the opposite ends of the arms.

In testimony whereof, I affix my signature in presence of two witnesses.

HERMAN BESSER.

Witnesses:
W. F. DENISON,
L. N. MACALPINE.