Aug. 30, 1932. E. SINNER 1,875,168

LOCK SWITCH

Filed June 22, 1928 2 Sheets-Sheet 1

Fig. 1.

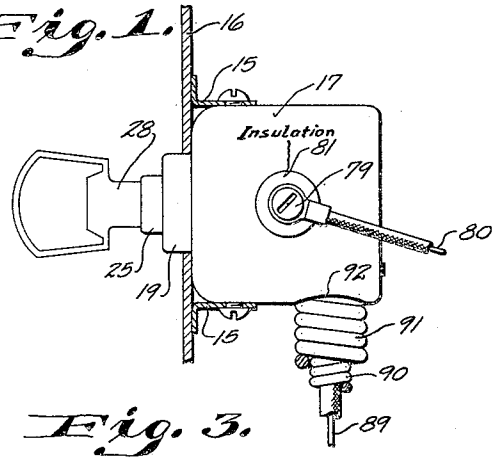

Fig. 12.

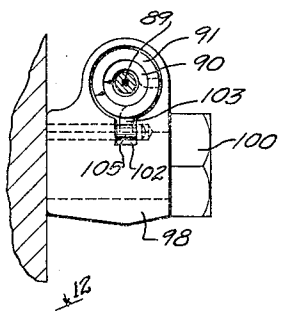

Fig. 3.

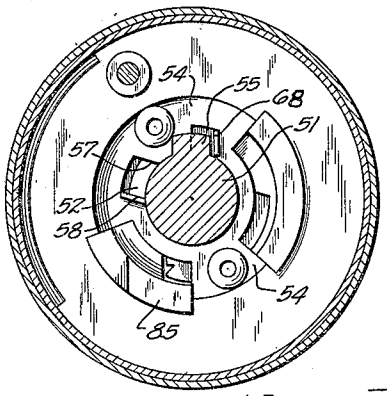

Fig. 11.

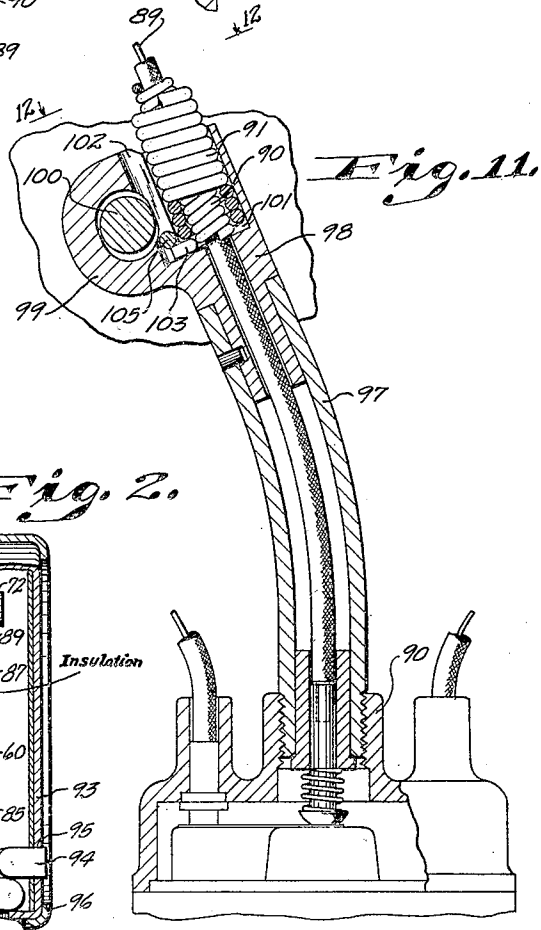

Fig. 2.

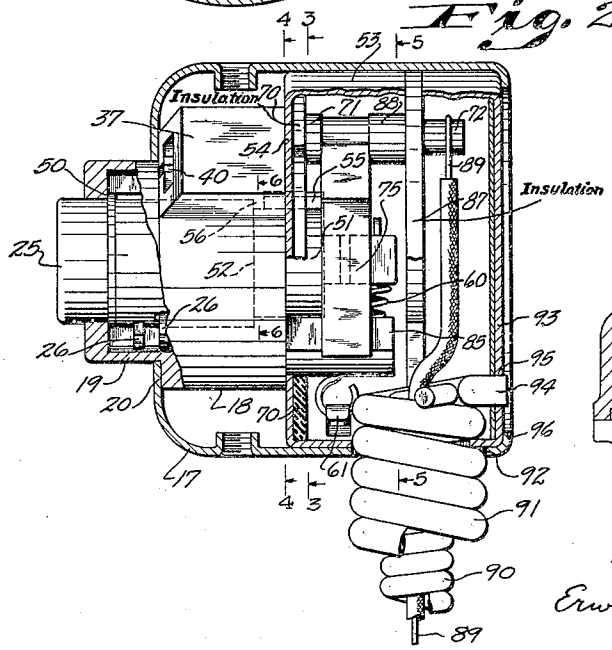

INVENTOR.

Emil Sinner

BY

Erwin, Wheeler & Woolard

ATTORNEYS

Aug. 30, 1932. E. SINNER 1,875,168

LOCK SWITCH

Filed June 22, 1928 2 Sheets-Sheet 2

Fig. 4.

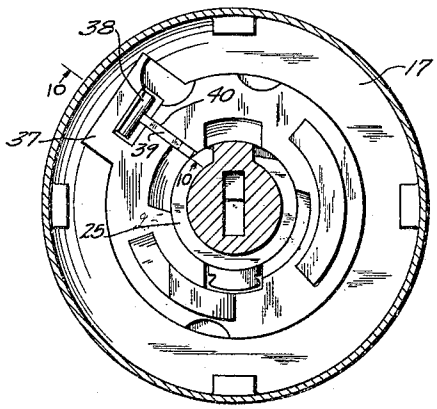

Fig. 5.

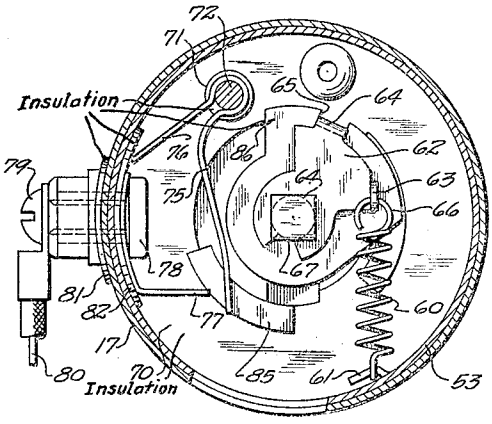

Fig. 6.

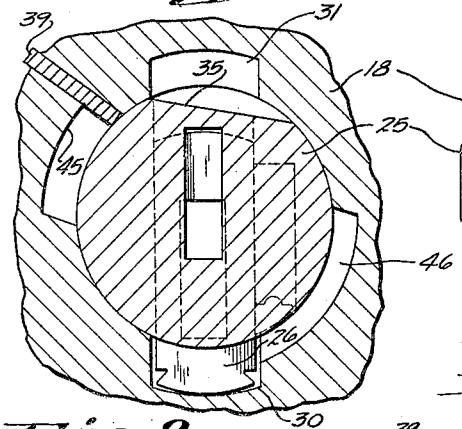

Fig. 10.

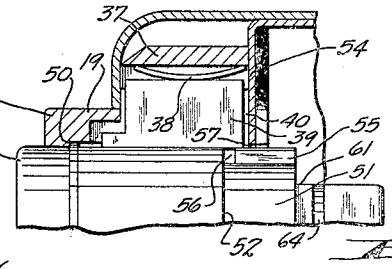

Fig. 7.

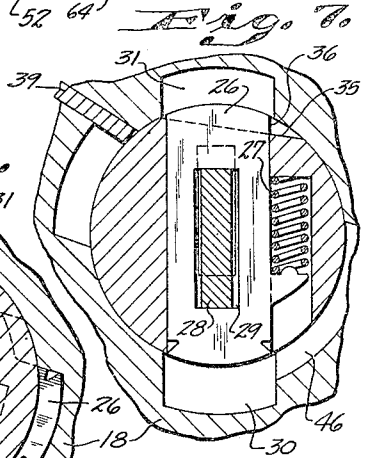

Fig. 8.

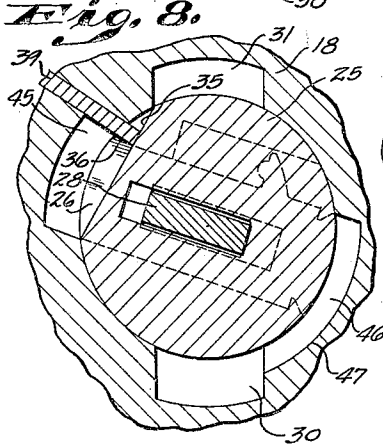

Fig. 9.

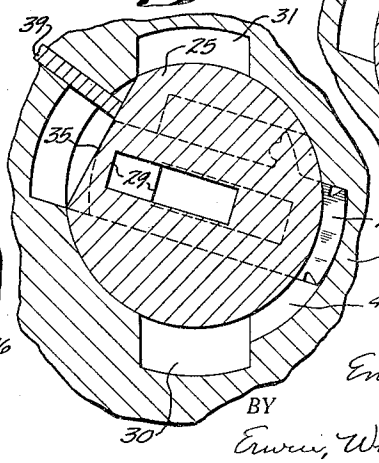

INVENTOR.

Emil Sinner

BY

Erwin, Wheeler & Woolard

ATTORNEYS

Patented Aug. 30, 1932

1,875,168

UNITED STATES PATENT OFFICE

EMIL SINNER, OF MILWAUKEE, WISCONSIN, ASSIGNOR TO CLUM MANUFACTURING COMPANY, OF MILWAUKEE, WISCONSIN, A CORPORATION OF WISCONSIN

LOCK SWITCH

Application filed June 22, 1928. Serial No. 287,442.

This invention relates to improvements in lock switches.

Notwithstanding the great improvement in locks with which motor vehicles are equipped, thefts have increased at an alarming rate because of the fact that even the best lock known to science is of no avail if the operator of the motor vehicle equipped with such locks leaves the key in the lock when the car is unattended. It is the forgetfulness of automobile operators rather than any deficiency in the strength or effectiveness of locks which is responsible for a very large proportion of thefts.

It is the purpose of the present invention to provide a solution for this situation by means of a lock construction which makes it practically impossible for the automobile operator to leave the key in the lock unintentionally. The lock switch to which this invention relates is applied in such a way as to control the ignition of the motor vehicle and it is the purpose of the invention to provide a mechanism so designed that so long as the key remains in the lock the switch cannot be shut off to stop the engine with which the motor vehicle is equipped. By making the complete removal of the key a prerequisite to turning off the ignition, I insure that the key will be called to the attention of the operator so that it cannot accidentally be left available to unauthorized persons.

Recognizing that it might be undesirable to require the operator to remove the key at the moment of stopping the motor and in further recognition of the fact that the owner will probably find it more convenient to put the key away on the same occasion upon which he takes the key from his pocket for unlocking the ignition, I have the further object for this invention of providing a construction in which the adjustment of the ignition switch to its off position and the consequent locking of the switch is accomplished by an adjustment of the lock mechanism independently of the key, whereby the key may be removed at any time subsequent to its initial use for unlocking or closing the switch and the lock will operate automatically when the switch is turned off.

It is my further object to provide a novel and improved anchorage for the ends of a theft-proof sheath for a conductor which leads from the lock and switch mechanism of this invention to the distributor or other ignition mechanism controlled by the switch, the switch being preferably of such a type that the opening of the switch will close a circuit to ground so that the ignition mechanism will be short-circuited irrespective of any attempted manipulation of the lock or switch.

It is also my purpose to ensure the inevitable operation of the lock to secure the switch in its open position. Contrary to usual practice, I provide a spring tending to open the switch and bring the lock plug to self-locking position. The withdrawal of the key is a prerequisite to the initiation of this automatic spring actuated movement which, when once initiated is not controllable by the operator, so that irrespective of the sequence of switch operation and lock engagement, the ultimate engagement of the lock will be inevitable.

In the drawings—

Figure 1 is a side elevation of a lock switch embodying this invention and provided with a sheathed conductor leading to the distributor;

Figure 2 is an enlarged view of the lock switch with the casing broken away to a central section to expose the interior mechanism in side elevation from the viewpoint of Figure 1;

Figure 3 is a section taken on the line 3—3 of Fig. 2;

Figure 4 is a section taken on the line 4—4 of Fig. 2;

Figure 5 is a section taken on the line 5—5 of Fig. 2 with the conductor and sheath removed;

Figure 6 is a view taken on the line 6—6 of Fig. 2 showing the cylinder and tumblers in their locked position with the switch off;

Figure 7 is a view similar to Fig. 6 but cut away to the plane of one of the tumblers, showing the position of the lock cylinder or plug and tumblers when the ignition switch mechanism is open but the key is in place

and the tumblers retracted to permit rotation of the cylinder and switch mechanism toward the switch closing position;

Figure 8 is a view similar to Figure 6 showing the cylinder and tumblers in the position which they occupy when the switch is closed but the key remains in the lock whereby the switch is locked in its closed position;

Figure 9 illustrates the cylinder and tumblers in the respective positions which they occupy when the ignition switch is still closed but the key has been removed to unlock the cylinder and move a contact of the switch for rotation in a switch opening direction;

Figure 10 is a detail taken through the lock casing in the section indicated at 10—10 in Figure 4;

Figure 11 is a detail view in section of the means whereby the conductor and sheath are anchored at the distributor and remote from the lock switch;

Figure 12 is a fragmentary detail in the section indicated at 12—12 in Fig. 11.

Like parts are identified by similar reference numerals throughout the several views:

The brackets 15 attached to the instrument panel 16 support the mechanism which is housed in shell 17 in the desired relation to the panel, through which the lock casing 18 projects at 19 to an extent determined by shoulder 20 which abuts the inside of shell 17, as shown in Fig. 2.

The lock may be of the plate or disk tumbler type wherein a rotatable cylinder or plug 25 carries flat tumblers 26 of the same length as the transverse diameter of the plug and mounted for reciprocation transversely of the plug whereby each tumbler may be projected laterally beyond the periphery of the plug by means of the compression springs 27 or may be registered with the plug by means of a suitable key 28 which passes centrally through the variously disposed slots 29 of the several plugs and is so notched in its bit portion as to be adapted to bring the tumblers simultaneously into registry with the plug when the key reaches its final position and not otherwise.

Figure 6 shows plug 25 adjusted to the position in which the ignition switch is open. In this position the tumblers 26 register with channel 30 in the lock casing 18 and are projected therein by springs such as that shown at 27 in Figure 7, whereby the plug 25 is non-rotatable and the ignition switch, hereinafter to be described, cannot be closed. When the key is inserted, however, to the position shown in Figure 7, its bit will cause the several tumblers 26 to become aligned with the plug in a well-known manner, whereupon the plug may be rotated from the position in which it appears in Figures 6 and 7 toward the position in which it is shown in Figures 8 and 9. As the key moves in and out of the plug, its serrated bit may cause the tumblers 26 to be projected either at one side of the plug 25 or at the other, wherefore a channel 31 is provided in the plug at a point diametrically opposite to the channel 30 into which the tumblers enter to lock the plug against rotation. As thus far described, the lock mechanism is of well-known construction and requires no further elaboration.

An unusual feature of the present invention consists in beveling off the side face of the lock plug or cylinder to a minor chord thereof, as shown at 35. This bevel is found adjacent the guideways for the lock tumblers remote from the end of the tumblers which, in a normal lock of this type, perform the locking function and enter channel 30. It is particularly to be observed that when the tumblers are retracted by the insertion of the key 28 to permit the rotation of the lock plug, as shown in Figure 7, they do not project beyond the extended periphery of the plug. But the beveled face 35 exposes at 36 a portion of the side margin of each of the several tumblers in their retracted positions.

The lock casing is also unusual in that it is provided at 37 with a box-like housing, clearly shown in Figures 2, 4, and 10. Within this housing the spring 38 is seated to press upon the dog 39 which operates in the slot 40 which affords communication between the cylindrical opening in which plug 25 is rotatable and the hollow interior of housing 37 wherein spring 38 is disposed.

The dog 39 comprises a flat plate of sufficient length so that it is adapted to engage all or substantially all of the tumblers 26 carried by the lock plug whenever the lock plug is rotated to the position shown in Figure 8 wherein the side marginal portions 36 of the tumblers 26 have uncovered dog 39, thereby allowing the dog to be projected in a centripetal direction to lodge behind the tumblers at the conclusion of their counter-clockwise rotation with the plug from the position shown in Figure 7.

In this position of the parts, it will be obvious that the tumblers register at one side of the lock casing with channel 45 and at the other side of the lock casing with an arcuate recess 46 which is of less radial depth than the several channels 30, 31, and 45 and which communicates with channel 30. Channel 45, like channel 31, is adapted simply to give clearance for the reciprocal movement of the tumblers during the insertion or retraction of the key. The recess 46, however, is of such depth as to receive a sufficient length of tumbler to retract into the lock plug the exposed margins 36 of each of the several tumblers.

It will be obvious, therefore, that if the key is withdrawn from the plug while the parts are in the position indicated in Figure 8, the tumblers will have adequate clearance for their reciprocal movement and, upon the full

withdrawal of the key, will be forced by their respective springs 27 into engagement with the outer peripheral wall surface 47 of the recess 46. In this position they are not as fully projected as when they register with channel 30. The additional movement provided by the increased radial depth of channel 30 provides a shoulder between channel 30 and recess 46 against which the tumblers engage to lock the plug, as shown in Figure 6.

Figure 9 shows the position which the tumblers assume when the key is withdrawn from the plug in the switch closing position of the latter. It will be observed that the margins 36 of the tumblers no longer project beyond the beveled side wall 35 of the plug, wherefore the dog 39 rests upon such wall which is adapted to act as a cam to move the dog radially when the plug is rotated clockwise toward its locked position. There is now nothing to restrain such movement of the plug except an additional detent device hereinafter to be described and the use of which is optional in that it merely enables the semi-automatic operation of the switch and lock mechanism. In any event, it will be observed that neither the tumblers nor the dog 39 oppose plug rotation in a clockwise direction as viewed in Figure 9 and upon such rotation the tumblers will ultimately register with channel 30 into which they will be forced to lock the parts in the original positions shown in Figure 6.

As a result of the arrangement and construction of the mechanism thus far disclosed, it will be obvious that the tumblers operate to lock the plug of this device both in its switch opening and switch closing positions, being retracted from locking position in the first instance by the insertion of the key and in the second instance by springs 27 upon withdrawal of the key.

In order to permit the key to be withdrawn without opening the ignition switch or operating the lock, while rendering the lock and switch self-acting in a rotating direction upon the mere release of the detent by the operator, I have provided the following mechanism:

The lock plug is not only rotatable within the lock casing but is also axially reciprocable therein. The various channels 30, 31, and 45, and the recesses 46 which receive the tumblers are all of them axially elongated sufficiently to permit of the desired range of axial cylinder movement. The outer end portion of plug 25 is reduced slightly in diameter and there is a corresponding reduction in the diameter of the bore in which the plug operates whereby complementary shoulders are formed at 50 (Figs. 2 and 10) whereby to limit the outward axial reciprocation of the plug. Similarly the interior end of the plug is reduced in diameter, as shown at 51, to provide a shoulder at 52 which seats against a cup-shaped member 53 inserted into shell 17 in such a manner that the bottom of the cup comprises a partition 54 apertured to receive the reduced extremity 51 of the plug.

The reduced extremity 51 of plug 25 is provided at 55 with a radially projecting lug which is spaced at 56 from shoulder 52. The periphery of the aperture through which the reduced portion 51 of the plug projects is provided at 57 with a notch of such dimensions as to be adapted to receive the lug 55 when the lug is in such notch, as shown in Figure 10. The plug and switch mechanism hereinafter to be described are keyed against rotative movement but are free to move axially. It will be observed that if the plug is pushed axially to the right as viewed in Figure 10 the partition 54 will ultimately register with the space 56 between lug 55 and shoulder 52 whereupon lug 55 will be wholly removed from engagement with such partition and the plug and related parts will be free for rotation.

Within the cup-shaped member 53 is a tension spring 60 which is attached at one end to a hook 61 struck from the wall of the cup member. At its other end, spring 60 is connected to an anchorage device 62 which is somewhat similar in form to a split washer with the addition of a plate which supports the apertured ear 63 to which the spring attaches and a finger 64 which enters a notch at 65 in a di-electric switch actuator 66 which may comprise a piece of fibre mounted on the squared end portion 67 of the lock plug to rotate therewith and held in place by the anchorage device 62 which is engaged in a groove at 64 in the end of the plug.

While the di-electric switch actuator 66 has primarily to do with the switch mechanism, hereinafter to be described, nevertheless it serves as a means for insuring the transmission of motion between tension spring 60 and the lock plug and is, therefore, here described.

The tension spring 60 is not disposed in a transverse plane normal to the axis of the device, but is inclined from such a plane so that it not only tends to rotate the lock plug and associated parts but also to move them axially to the left as viewed in Figures 2 and 10. The tension of spring 60 as applied to the rotation of the plug is such as to tend to oscillate the plug to its switch opening position, as shown in Figure 5. This position of the parts is defined by a stop lug 68 struck up from the face of partition member 54 in the path of movement of lug 55 on the lock plug, as best shown in Figure 3. When the key is inserted to align the tumblers with the plug, as shown in Figure 7, the plug may be rotated to its Figure 8 position, whereupon lug 55 will encounter the stop lug 58 which is likewise struck up from partition 54 and

may conveniently be formed by the material removed from the notch 57.

In this position of the parts it will be found that lug 55 registers with notch 57 and there is a tendency for the tension spring 60 to move the plug and related parts axially to cause the lug to enter notch 57. If the spring does not effect this axial adjustment of the lock plug at the moment of registry, the desired result will be obtained nevertheless, upon withdrawal of the key, since there is considerable friction between the serrated bit of the key and the tumblers which are reciprocated through engagement with said bit during the progressive withdrawal of the key from the plug. The ultimate result therefore, at the time the key is withdrawn to leave the parts as shown in Figure 9, involves an axial position of the lock plug and related parts corresponding to the disclosure in Figures 2 and 10.

It is to be noted that insofar as the lock tumblers are concerned the plug and related parts are now free to rotate to their Figure 6 position under the tension of spring 60. The tumblers have been forced by their compression springs 27 out of engagement with the stop dog 39. The plug cannot, respond, however, to the urge of tension spring 60 because of the splined engagement of lug 55 in notch 57 which, notwithstanding the withdrawal of the key, will continue to hold the plug in such a position that the ignition switch mechanism is closed to complete an electrical circuit. This arrangement makes it conveniently possible for the operator of the vehicle to replace his key in his pocket immediately after he has used it to unlock the switch, the switch continuing to remain closed until the detent device which includes the splined mechanism just described is released by pressure of the operator's finger upon the exposed end of the lock plug 25 which projects from the lock casing for that purpose, as is clearly shown in Figures 1, 2 and 10.

When the detent mechanism is released by axial movement of the parts to the right as viewed in Figs. 2 and 10, spring 60 is then free to act and will rotate the plug and related parts to the position in which they are illustrated in Figs. 3, 4, 5, and 6.

From the foregoing, it will be understood that while the withdrawal of the key releases the lock mechanism which restrains the plug from counter-clockwise rotation toward switch opening position so long as the key remains in the lock, there nevertheless remains an additional detent which requires manual release to permit the parts to move toward switch opening position in which position they are automatically relocked.

Having now described the lock mechanism, I shall describe the switch actuated and controlled thereby.

Switch mechanism

Upon the interior surface of the bottom 54 of cup member 53 is a di-electric annulus 70 of fibre, bakelite, or the like, provided at 71 with a boss in which is a conducting bearing pin 72 for a resilient moving contact 75 constructed in the form of a spring having one end portion 76 in abutment with a fixed stop.

The fixed contact 77 comprises a strip conductor bent to present its end to the moving contact 75 and anchored by the head of a terminal rivet 78 which is tapped to receive terminal screw 79 by which conductor 80 is secured to the terminal. Suitable sheets of insulation material are interposed at 81 and 82 between the parts of the terminal and the metal sheel 17 on the outside, and cup 53 on the inside. The end 76 of the moving contact springs seats against the di-electric sheet 82, as shown in Fig. 5.

The free end of the moving contact 75 normally abuts a stop lug 85 which projects axially from the lock casing. When the lock plug is rotated to the position in which it is shown in Figures 8 and 9 the concentric portion 86 of the switch actuator 66 strikes the spring contact 75 and moves it from engagement with lug 85, upon which it is normally grounded, into engagement with the end of the fixed terminal contact 77 to close the ignition circuit between conductor 72 and conductor 80.

Conductor 80 may be exposed since so long as the lock and switch mechanism herein disclosed remains intact nothing done to conductor 80 will make the ignition circuit operative, particularly in view of the grounding of contact 75 within the switch. It is essential, however, that the conductor between pin 72 and the distributor be protected and to this end the following arrangements are made.

Protection for switch control circuit

Fitted into shell 17 immediately adjacent the switch mechanism above described, is a di-electric partition 87 which seats against the outer margin of cup 63. A sleeve 88 interposed between this partition and the contact spring 75 serves to position such spring axially of the pin 72. Pin 72 projects through partition 87 and there receives connection with the conductor 89 which requires protection and leads to the distributor, a standard form of which is shown generally at 90.

The conductor 89 comprises an insulated wire and in order to protect it I wind about it two helical sheaths 90 and 91 of opposite pitch. It is very difficult to cut such a compound sheath not only because the wires of which the sheath is wound are hardened piano wire or the like, but for the further reason that the opposite pitch of the component sheath elements makes it very difficult to find a good point of engagement upon either one

of them with a cutting tool, which will tend to penetrate between the wires rather than to cut.

The end of the sheath extends through an aperture at 92 in the side of the shell 17 and is there secured by a cup-shaped member 93 which is inserted in the shell in opposition to the cup 53 and is provided with a notch of less radius than opening 92 so that the margin of the cup-shaped member about such notch will enter between two concentric turns of the outer helix 91 of the sheath thereby holding such sheath to the shell. The extremity 94 of the helix is formed to project laterally, as shown in Figure 2, and is received into an opening 95 in the cup member 93 whereby the helix is secured against rotation and cannot be unscrewed from the binding engagement of cup 93 therewith. Thereupon, the upper peripheral margin 96 of the shell is spun or otherwise upset over cup 93 to hold the same permanently in place thereby fixing the assembly of the lock switch mechanism.

The other end of the conductor passes through an anchorage tube 97 to the distributor 90. This tube is formed with a head-piece 98 having an apertured ear 99 adapted to receive one of the cap screws 100 of the engine with which the device is used. The head-piece has a bore at 101 which is provided at 102 with a slot opening into the bore in the nature of a keyway. The end of the sheath is received into the bore and the extremity of the outer helix 103 is formed to project laterally into the slot 102. When the sheath has been thus assembled to the head-piece 98 and before the head-piece is screwed to the engine block, a pin 105 is driven into the head-piece from the face thereof which is intended for abutment with the engine block to intersect slot 102 and thereby to confine the projecting extremity 103 of the sheath and to anchor the sheath in place. It will be observed from Figure 12 that the aperture into which this pin is driven is not accessible from the exterior and hence it will be very difficult to remove this pin and to disassemble the parts.

Operation

The parts being assembled, as disclosed above, prior to the insertion of key 28 in the lock, the ignition circuit will not alone be opened but the distributor will be grounded due to engagement of contact 75 with the conducting stop plug 85. The parts will be locked due to the fact that all of the several tumblers 26 will have been projected into channel 30 by their respective compression springs 27. It is, therefore, impossible to operate the switch until key 28 having the proper conformation of bit is inserted to retract the tumblers into registry with the lock plug, as shown in Figure 7.

The lock not merely controls but serves to operate the switch mechanism. When the key is inserted and the tumbler retracted, the key may be used as a handle for the rotation of the lock plug in a counter-clockwise direction to the position shown in Figure 8, thereby adjusting the switch mechanism from the position illustrated in Figure 5 to a position in which contact will be effected between spring 75 and the fixed terminal contact 77 to close the ignition circuit.

In this position of the parts, the dog 39 will be forced by spring 38 into a position behind tumblers 26. Since the switch mechanism can be operated only through the lock mechanism, it now becomes impossible to adjust the parts in a clockwise direction to open the switch due to the inter-action of dog 39 and the several tumblers. In other words, the switch is locked closed and will remain so until the key is withdrawn to permit the tumblers, free of control by the key, to be projected radially into engagement with the wall of recess 46 at which point they will no longer interact with dog 39. At least as soon as the withdrawal of the key, however, a new form of interlocking is established to prevent the opening of the switch.

When the key is withdrawn, if not sooner, the axial component of the tension of spring 60 is exerted to adjust the lock plug in a direction such that the plug projects from the casing at the front of the device and its lug 55 enters notch 57 to effect splined engagement between the plug and the relatively fixed partition wall 54, as above indicated, this arrangement is intended to make it possible to use the automatic switch opening and locking feature while providing a suitable detent to prevent the automatic mechanism from operation upon the mere withdrawal of the key until such time as the operator of the vehicle may desire to stop the engine thereof. So far as the key controlled part of the lock is concerned, the parts now in position for opening the switch and locking it open automatically. The detent, however, restrains the automatic operation.

It being assumed that the operator has withdrawn the key and replaced it in his pocket immediately following his use of the key to unlock and close the switch, the vehicle engine being in operation in the meantime, the switch may now be permitted to open and to lock itself in open position by the simple expedient of pressing upon the projecting and exposed end of the lock plug 25 thereby freeing lug 55 from notch 57 and permitting the parts to rotate to the positions indicated in Figures 3, 4, 5, and 6.

Since it is impossible to open a switch embodying this invention until the key therefor has been wholly and completely withdrawn from the switch, it will be obvious that the invention satisfies the objects afore-

said and guards against forgetfulness on the part of the operator as well as attack by unauthorized persons.

The invention also guards against careless or inadequate locking of the switch. When a switch is manually opened to a position in which it automatically locks itself, it is sometimes possible to open the switch without moving the parts sufficiently far to enable the lock to become operative. In this device, the purely mechanical opening of the switch to locking position makes it impossible for the parts to be brought to rest before the completion of the movement. The operator could not, if he wished, stop the mechanism after the switch is open and before the lock becomes effective. The mere withdrawal of the key releases the first detent mechanism and, in structures where the second detent is not desired, permits the imitation of the switch opening-lock operating movement. In any event the withdrawal of the key is a prerequisite to the initiation of such movement which as above indicated may be controlled by a secondary detent device if it is desired to postpone such movement to a time subsequent to the withdrawal of the key.

I claim:

1. In a device of the character described, the combination with a switch actuator movable between a switch opening position and a switch closing position, of a lock plug controlling the position of said actuator and adapted to receive a removable key, and means automatically acting to restrain said plug in the switch closing position of said actuator and including interacting members of which one is releasable solely upon withdrawal of the key.

2. In a device of the character described, the combination with a movable switch contact and an actuator for said contact of lock mechanism controlling said actuator and comprising a rotatable plug adapted to receive a key, tumblers carried by said plug and adapted to be aligned in one position upon the withdrawal of said key and in another position upon the insertion of said key, and a lock casing cooperative with said tumblers and provided with means against which said tumblers abut in their first position and also in their second position, said tumblers being adapted to be freed from engagement with said means by insertion of the key, in the case of one of said means, and by the withdrawal of the key in the case of the other.

3. In a device of the character described, the combination with a switch, of lock mechanism for the control and operation of said switch comprising a rotatable lock plug carrying a switch actuator, a tumbler transversely reciprocable with respect to said plug, a key insertable into said plug and adapted to retract said tumbler into alignment therewith, the plug being adapted to rotate between switch opening and switch closing positions, an actuating spring urging said tumbler in one direction transversely of said plug and tending to disalign said tumbler with respect to said plug, and a casing within which said plug is revoluble and which is provided with tumbler receiving openings in each of the aforesaid positions of the plug, and a dog carried by said casing and arranged for interaction with said tumbler in one of said plug positions, said key being adapted to free said tumbler for the rotation of said plug upon the insertion of the key in one of the plug positions, and said spring being adapted to free said tumbler for the rotation of said plug upon the withdrawal of the key in the other of said plug positions.

4. In a device of the character described, the combination with a switch having an on and an off position, of a lock including a plug rotatable to control and operate the switch, a casing within which said plug is supported for oscillation, a tumbler controlling the movement of said plug, a key adapted to adjust said tumbler with respect to said plug upon the insertion and withdrawal of the key, said casing being provided with means for co-acting with said tumbler both in the off and the on position of said switch, and said key being formed for releasing said tumbler from said means in the off position upon key insertion and in the on position by key movement for removal.

5. In a device of the character described, the combination with a switch having an on and an off position, of a lock including a plug rotatable to control and operate the switch, a casing within which said plug is supported for oscillation, a tumbler controlling the movement of said plug, a key adapted to adjust said tumbler with respect to said plug upon the insertion and withdrawal of the key, said casing being provided with means for co-acting with said tumbler both in the off and the on position of said switch, from which means said tumbler is releasable by a change in the position of the key, and a manually releasable detent operative to restrain rotation of said plug after the release of said tumbler in one of said positions by manipulation of the key.

6. In a device of the character described, the combination with a switch, of key controlled mechanism operable upon the insertion of a key for closing the switch, and adapted to lock in the closed position thereof against movement toward the open position thereof, said mechanism being releasable in the closed position of said switch upon withdrawal of the key, and means for returning said mechanism to the open position of the switch and locking said mechanism in said last mentioned position, together with a manually releasable detent restraining said

last mentioned means independently of said key.

7. In a device of the character described, the combination with a switch, of controlling and operating means therefor, including a lock comprising a plug, tumblers, and means cooperating with said tumblers to lock said plug both in the open and the closed position of said switch, together with a key formed for interaction with said tumblers and adapted to actuate said tumblers to a position for release from said means when the key is inserted in the open position of said switch, and adapted when withdrawn to release said tumblers from said means in the closed position of said switch.

8. In a device of the character described, the combination with a switch, of controlling and operating means therefor, including a lock comprising a plug, tumblers, and means cooperating with said tumblers to lock said plug both in the open and the closed position of said switch, together with a key formed for interaction with said tumblers and adapted to actuate said tumblers to a position for release from said means when the key is inserted in the open position of said switch, and adapted when withdrawn to release said tumblers from said means in the closed position of said switch, and a spring acting upon said plug in a direction to return said plug to the position in which said switch is open.

9. In a device of the character described, the combination with a switch, of controlling and operating means therefor, including a lock comprising a plug, tumblers, and means cooperating with said tumblers to lock said plug both in the open and the closed position of said switch, together with a key formed for interaction with said tumblers and adapted to actuate said tumblers to a position for release from said means when the key is inserted in the open position of said switch, and adapted when withdrawn to release said tumblers from said means in the closed position of said switch, and a spring acting upon said plug in a direction to restrain said plug to the position in which said switch is open, said tumblers being adapted automatically to co-act with said means upon reaching said positions.

10. In a device of the character described, the combination with a switch, of controlling and operating means therefor, including a lock comprising a plug, tumblers, and means cooperating with said tumblers to lock said plug both in the open and the closed position of said switch, together with a key formed for interaction with said tumblers and adapted to actuate said tumblers to a position for release from said means when the key is inserted in the open position of said switch, and adapted when withdrawn to release said tumblers from said means in the closed position of said switch, and a spring acting upon said plug in a direction to return said plug to the position in which said switch is open, said tumblers being adapted to co-act with said means upon reaching said positions, and a manually releasable detent device adapted to restrain said plug against rotation by said spring following the release of said tumblers from said means on withdrawal of said key.

11. In combination, a lock including a member movable when unlocked and a key-releasable self-acting tumbler adapted in one position of said member automatically to lock it in such position, a switch including a fixed contact and a movable contact controlled by said member and spaced from the fixed contact in said position of said member, a spring urging said member toward said position, and manually releasable detent means adapted to restrain said member and moving contact against spring actuated movement toward said position following withdrawal of said key pending separate manual release.

12. In combination, a lock including a member movable when unlocked and key-releasable self-acting tumblers adapted in one position of said member automatically to lock it in such position, a switch including a fixed contact and a movable contact controlled by said member and spaced from the fixed contact in said position of said member, a spring urging said member toward said position, and manually releasable detent means adapted to restrain said member and moving contact against spring actuated movement toward said position following withdrawal of said key pending separate manual release, said movement being beyond the control of the operator when initiated by manipulation of the detent.

13. In combination, a lock including a member movable when unlocked and key-releasable self-acting tumblers adapted in one position of said member automatically to lock it in such position, a switch including a fixed contact and a movable contact controlled by said member and spaced from the fixed contact in said position of said member, a spring urging said member toward said position, and manually releasable detent means operable without said key and adapted to restrain said member and moving contact against spring actuated movement toward said position, said movement being beyond the control of the operator when initiated by manipulation of the detent, and means whereby the withdrawal of the key is a pre-requisite to such movement.

14. The combination with a plug and a reciprocable locking tumbler, of a switch controlled thereby, a key for adjusting said tumbler, a stop co-acting with said tumbler in one position thereof to restrain the movement of said switch from a first position, and means co-acting with said tumbler in another

position thereof with respect to said plug to restrain the movement of said switch from a second position.

15. In a device of the character described, the combination with a switch having a movable contact adjustable between open and closed switch positions, of a lock plug provided with connections for the actuation of said contact and movable between positions invariably corresponding to the open and closed positions of said contact, and key controlled means for locking said plug in each of said positions and adapted to release said plug from the position in which said switch is closed solely upon withdrawal of the key.

EMIL SINNER.