Aug. 8, 1933. P. W. BLAKE 1,921,500

MOORING BUOY

Filed May 28, 1932

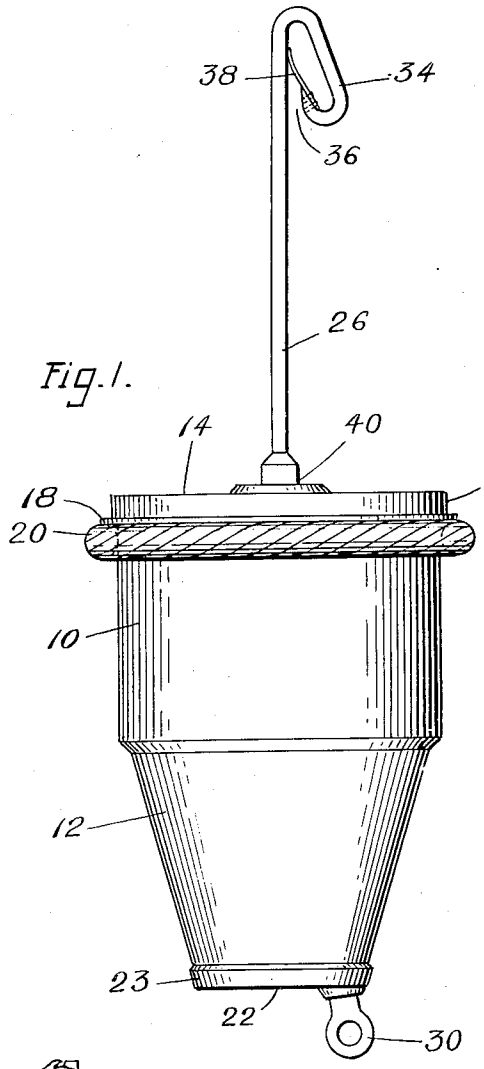

Fig. 1.

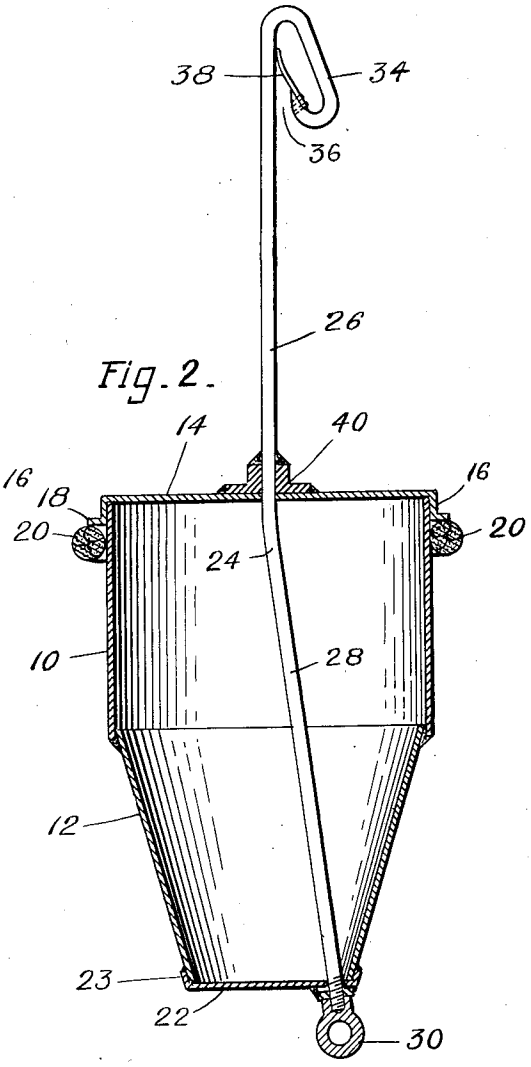

Fig. 2.

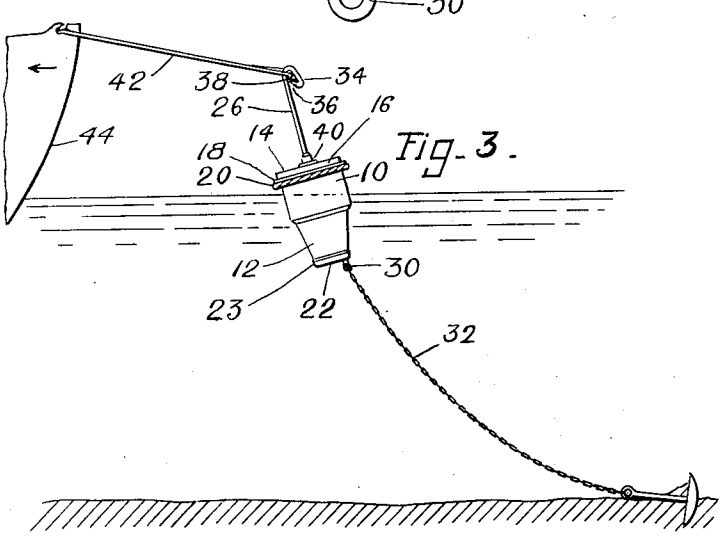

Fig. 3.

Inventor:
Preble W. Blake
by T. T. Greenwood
atty

Patented Aug. 8, 1933 1,921,500

UNITED STATES PATENT OFFICE

1,921,500

MOORING BUOY

Preble W. Blake, Newton, Mass., assignor to Harmon P. Elliott, Watertown, Mass.

Application May 28, 1932. Serial No. 614,157

5 Claims. (Cl. 9—8)

This invention relates to mooring buoys and is intended as an improvement on the buoy of the Elliott Patent No. 1,301,729, dated April 21, 1931.

One of the features of the Elliott buoy is that the mooring spindle upstands above the buoy at one side of the vertical middle thereof so that the buoy can rotate upon a side pull of the mooring rope on the spindle and present the inverted hook at the top of the spindle always in the proper position to be entered and engaged by the rope, regardless of the direction of pull of the rope. I have found, however, that the same result can be obtained when the spindle is in the middle of the buoy, if the connection between the anchor cable and the buoy is offset from the vertical middle of the buoy, an arrangement that is preferable for many purposes, since it provides a buoy that is symmetrical in appearance and eliminates the necessity of weighting the buoy to counterbalance the offset weight of the upstanding spindle. A buoy so constructed constitutes an object of the present invention.

A further object is generally to improve the construction of buoys.

Fig. 1 is an elevation of a mooring buoy embodying the present invention.

Fig. 2 is a sectional elevation through the buoy of Fig. 1.

Fig. 3 is a diagrammatic representation of the manner of using the buoy.

The buoy herein illustrated as embodying the invention comprises a hollow buoyant body composed of an upper cylindrical shell 10 formed of sheet metal, and a lower inverted conical metal shell 12, the two shells being secured together in a water-tight manner by any suitable means, as by welding. The open top of the upper cylindrical shell is closed by a head having a flat wall 14 which overlies the top of said shell and a circular side wall 16 which surrounds and overlies the upper portion of the side wall of said shell and is secured thereto in a water-tight manner as by welding. The lower portion of said side wall 16 is provided with a circumferentially outstanding flange 18 against which an endless bumper ring or band 20 is seated and outstands, said ring preferably being made of rope or other suitably yielding material which encircles and frictionally engages the cylindrical section of the buoy under said flange.

The open lower end or apex of the conical section of the buoy is closed by a head 22 having an upstanding circular side wall 23 that surrounds the lower portion of the conical section and is secured thereto in a water-tight manner.

In accordance with the present invention the buoy is provided with a spindle 24 which extends through the middle of the top head 14 and through the bottom head 22 at one side of the vertical axis of the buoy and near the bottom edge of the conical section 12. The spindle has a straight vertical section 26 that upstands above the top of the buoy to a suitable height in the middle or vertical axis of the buoy. The spindle is bent immediately under the top head and has a straight lower section 28 that extends downwardly and is inclined away from the vertical axis to the point where it passes through the lower head. The spindle, where it passes through the buoy, is sealed thereto in any suitable water-tight manner. The lower external end of the spindle is provided with an eye 30 to which an anchor cable or chain 32 is attached, the eye being screw-threaded onto the spindle and welded onto the lower head, thereby preventing the eye from turning and also providing a water-tight seal between the spindle and the buoyant member thereat. The upper end of the spindle is provided with an inverted hook 34 which is offset laterally from or is located at one side of the spindle, in a direction toward the attaching eye 30, and has an entrance 36 which faces the buoy. The entrance is yieldingly closed by a spring latch comprising a resilient plate 38 which is secured to the hook and bears yieldingly against the spindle. The bight of a rope passed upwardly on the spindle can spring the latch away from the spindle and thus enter the hook where it will be retained until the latch is sprung by hand.

A reinforcing collar or flange 40 is secured as by being welded to the top head about, and also to, the spindle where the spindle passes through the head to provide a good connection thereat between the buoyant member and the spindle and to provide a water-tight seal between the spindle and the buoyant member. However, no particular mooring strain is taken by the buoyant member as the spindle transmits the strain directly from the hook to the anchor chain.

The buoy as thus constructed is caused to rotate in the water under a sidewise pull of a mooring rope 42 thereon about the anchor chain as a pivot so that the straight upstanding axial section 20 of the spindle is nearer the boat 44 than the eye 30 to which the anchor chain is attached and the hook 34 is facing away from the boat. The pull of the mooring rope causes

the buoy to tilt to such an angle that the bight of the rope slides upwardly on the spindle and into the hook, thereby automatically causing the rope to be connected with the buoy and, through the spindle, with the anchor chain.

I claim:

1. A mooring buoy comprising a buoyant member having a spindle which upstands from the middle of the buoy and has a connection for a mooring rope above the buoy, and a connection for an anchor cable at the bottom of the buoy at one side of the middle thereof.

2. A mooring buoy comprising a buoyant member having a spindle which upstands from the middle of the buoy and has a connection for a mooring rope above the buoy, and a connection for an anchor cable at the bottom of the buoy at one side of the middle thereof, said mooring rope connection comprising an inverted hook having an entrance which faces said buoyant member and projects from the spindle on the side toward said anchor cable connection.

3. A mooring buoy comprising a buoyant member having a spindle which upstands from the middle of the buoy and has a connection for a mooring rope above the buoy, and a connection for an anchor cable at the bottom of the buoy at one side of the middle thereof, said mooring rope connection comprising an inverted hook having an entrance which faces said buoyant member and projects from the spindle on the side toward said anchor cable connection, said hook having a latch which removably closes said hook-entrance.

4. A mooring buoy comprising a symmetrical buoyant member, a mooring spindle carried by said buoyant member having a straight section which upstands from said member in the vertical axis thereof and has an inverted mooring hook at the upper portion which extends laterally from said spindle and has an entrance which faces said member and a latch disposed in position to removably close said entrance, said spindle having a lower section which extends downwardly through said buoyant member at an angle with the vertical axis and is terminated at the bottom of said member in an anchor chain connection which is disposed at one side of the vertical axis of said buoyant member.

5. A mooring buoy as defined in claim 4 wherein said anchor chain connection is on that side of the vertical axis of said buoyant member toward which said hook is directed.

PREBLE W. BLAKE.