United States Patent [19]

Weinar

[11] **4,221,095**

[45] * **Sep. 9, 1980**

[54] **WALL CONSTRUCTED FROM WALLBOARD HELD TOGETHER WITH CONCEALED FASTENERS**

[76] Inventor: **Roger N. Weinar,** 168 W. Woodside Ave., Buffalo, N.Y. 14220

[*] Notice: The portion of the term of this patent subsequent to Oct. 3, 1995, has been disclaimed.

[21] Appl. No.: **947,078**

[22] Filed: **Sep. 29, 1978**

Related U.S. Application Data

[63] Continuation-in-part of Ser. No. 736,425, Oct. 28, 1976, Pat. No. 4,117,644.

[51] **Int. Cl.**[2] **E04B 5/52**

[52] **U.S. Cl.** **52/489;** 52/281; 52/481; 52/714

[58] **Field of Search** ..... 52/481, 489, 281, 714, 52/483, DIG. 6, 509, 715

[56] **References Cited**

U.S. PATENT DOCUMENTS

2,831,222	4/1958	Anderson	52/489
3,187,389	6/1965	Anderson	52/489
3,308,590	3/1967	Etture et al.	52/714 X
4,000,596	1/1977	Magill et al.	52/481
4,052,831	10/1977	Roberts et al.	52/714 X
4,117,644	10/1978	Weinar	52/714
4,127,975	12/1978	Judkins	52/489

Primary Examiner—Price C. Faw, Jr.
Assistant Examiner—Carl D. Friedman
Attorney, Agent, or Firm—Raymond F. Kramer

[57] **ABSTRACT**

Mechanically fastened appended tabs invisibly secure common edge-abutting wallboard panels to common wood or metal framing members. The fastener appendants are spaced apart tabs extending from the back of and exposed beyond the vertical edges of the wallboard panels so as to be conveniently screw fastened. When screw fastened to common wall framing members, the appended tabs secure the wallboard panels slightly off the framing member front surface to permit offset appendant tabs of abutting wallboard panels to slide between the fastened wallboard panels and the framing members and be engaged by the fastened wallboard panels in a tongue and groove relationship.

13 Claims, 6 Drawing Figures

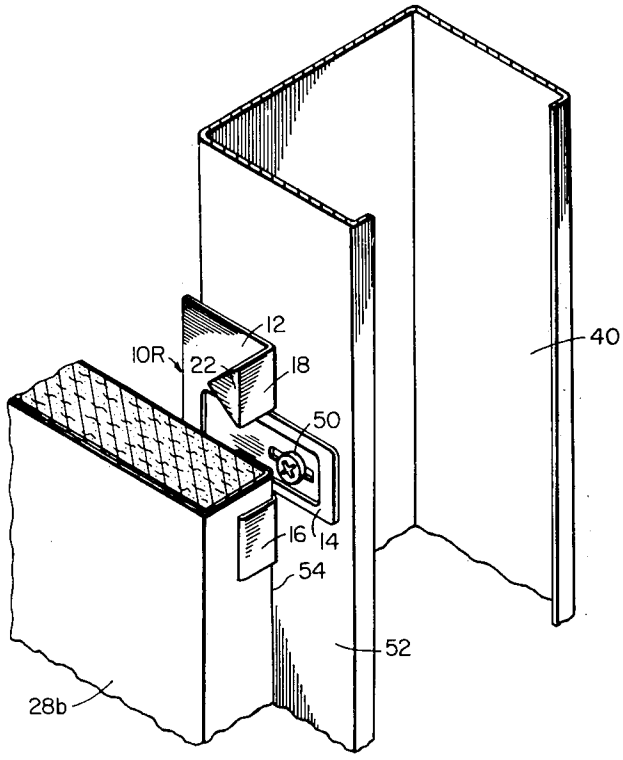

Fig. 1

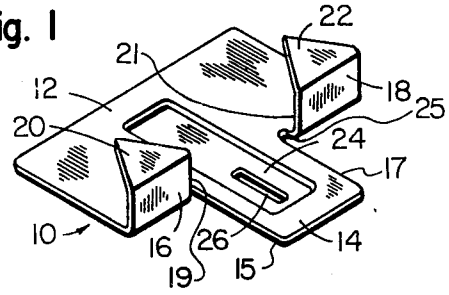

Fig. 2

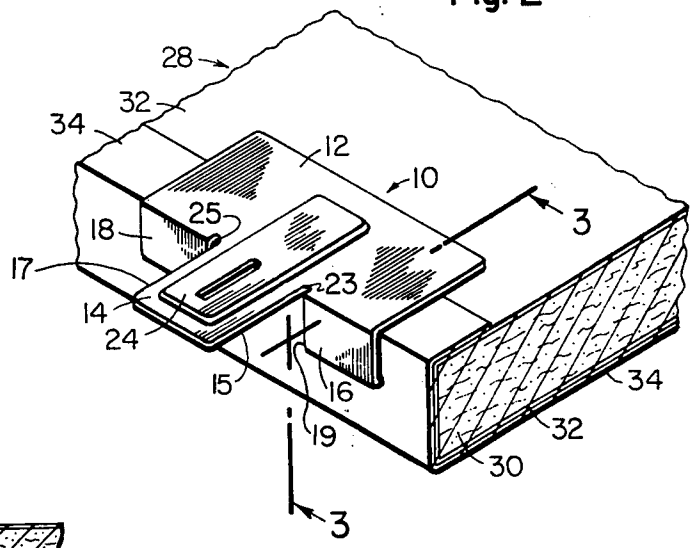

Fig. 3

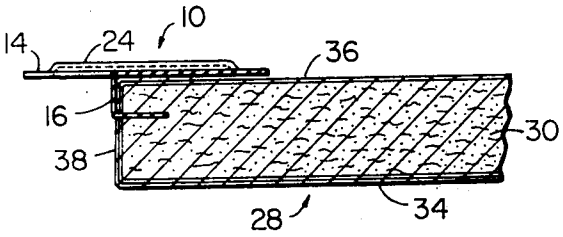

Fig. 4

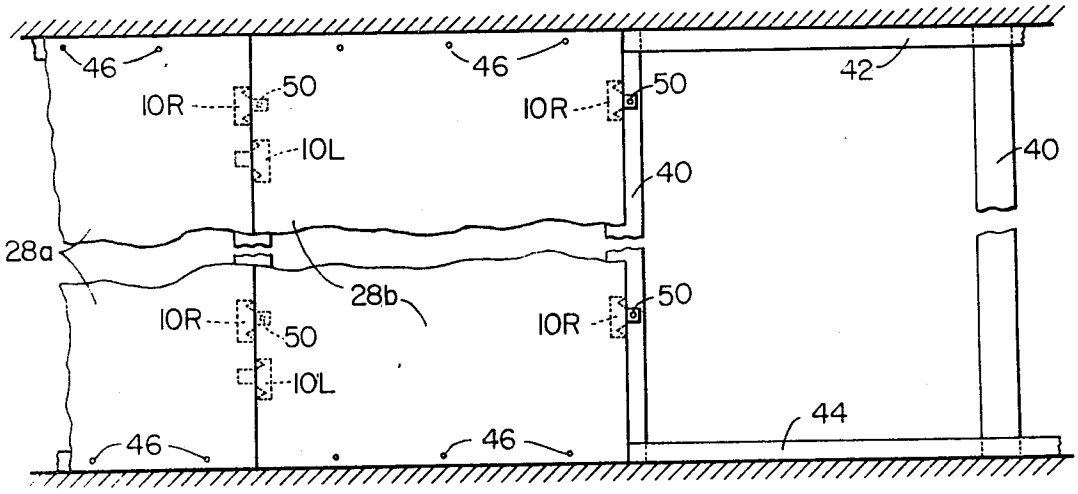

Fig. 5

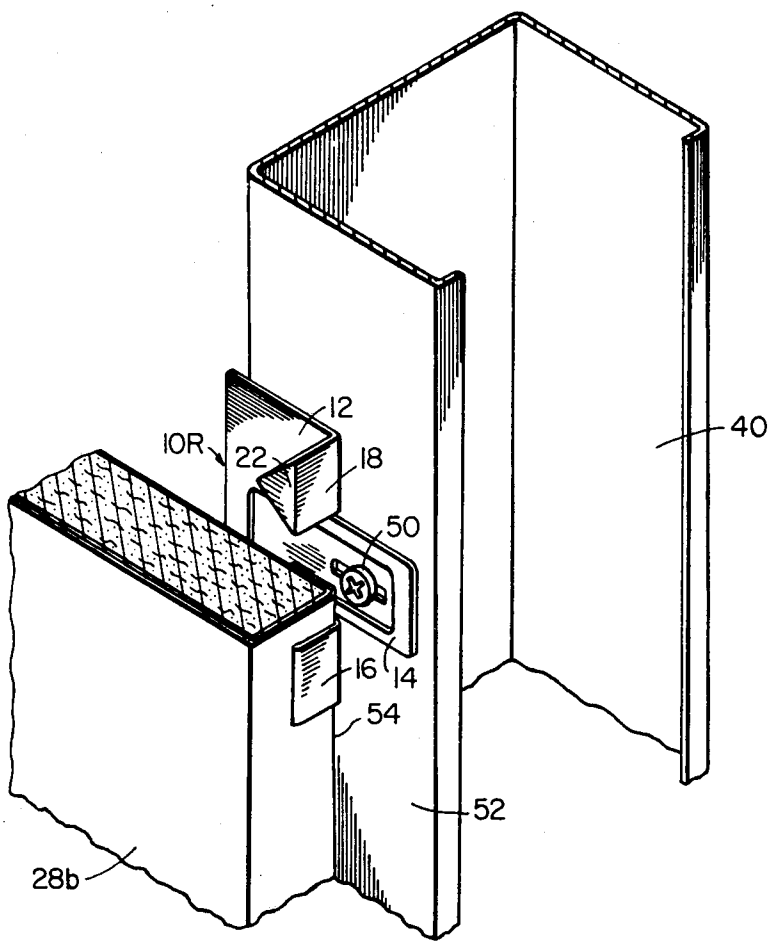

Fig. 6

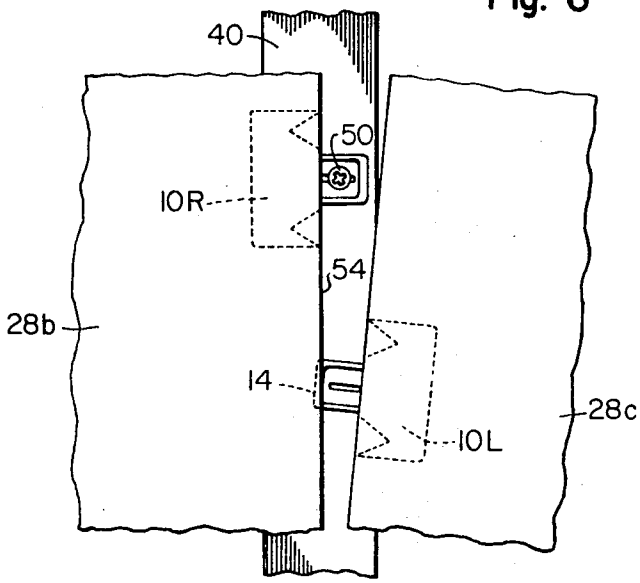

WALL CONSTRUCTED FROM WALLBOARD HELD TOGETHER WITH CONCEALED FASTENERS

This application is a continuation-in-part of my patent No. 4,117,644, issued Oct. 3, 1978.

This invention relates to conventional wallboard construction and the common practice of supporting pre-finished wallboard panels on ordinary framing members, such as wood or metal studs and furring runners. Pre-finished wallboard panels are available from many sources in a wide variety of colors and textures, the most common being the vinyl surfaced gypsum drywall panels. Various methods are used to secure these pre-finished panels to ordinary framing members, a preferred practice being to secure each sheet perimeter with self-drilling screw fasteners. This method holds the panels securely but requires a decorative cover or batten strip to conceal the unsightly screw heads along the exposed panel joints. A more aesthetically pleasing but more difficult construction method utilizes an adhesive to invisibly secure the wallboard panels to ordinary wood or metal framing members. This method eliminates the unsightly batten strips but elaborate bracing devices are required to temporarily secure the panels while the adhesive cures. The adhesive method is desirable for unobstructed joint surface appearance but the installation is highly labor intensive and the panels are difficult to remove without damage.

Many so called "movable" or "demountable" partition systems are available which utilize pre-finished wallboard panels modified with various fastening devices, but all of these systems require unique or specially manufactured framing members of more or less elaborate configuration. These special, single purpose framing members are not as readily available as competitively priced ordinary wood or metal studs and furring, and expensive inventories are required for installation and maintenance of these special systems.

In accordance with the present invention there are provided walls made from wallboard assembled with special fasteners, such as those described in my patent No. 3,117,644. The wallboard fasteners employed are useful for holding a first wallboard panel to a framing member at an end thereof and for joining to a second wallboard panel to be installed coplanar with and having an end thereof abutting the held end of the first panel so that parts of said fasteners, on installation of the second wallboard, contact the first panel, to which said fasteners are not joined, and prevent transverse movements of the second panel. Such fasteners preferably comprise single pieces of sheet metal, each having a substantially flat plate portion, a tongue portion extending from the plate portion and coplanar therewith, a pair of web portions, one on each side of the tongue portion and each extending at a right angle from said plate portion and an impaling flange portion extending from each web portion in the same direction, essentially parallel to and overlying said plate portion and opposite to the direction in which the tongue extends so that the plate portion may contact the surface of the wallboard panel while the impaling flange portion is impaling said panel at an edge thereof. Said fasteners include a walled depressed area in the plate and tongue portions with a longitudinal slot in the tongue portion, the depression being in the direction opposite to that in which the webs extend. Preferably the fasteners have no impaling portions extending in the direction of the tongue portion and are free of webs extending beyond the depression from the tongue and from the plate portions in the direction the depression extends from such portions. The fasteners are preferably made of a spring steel, such as SAE 1050, which is annealed before forming and after forming is heat treated to a Rockwell hardness in the C-24-34 range, more preferably in the C-28-30 range. Preferably, in such fasteners the depressed area in the plate and tongue portions is of such a depth as to allow the head of a mounting screw passing through the slot in said depressed area to be below the surface of the tongue portion of the fastener and the depressed area has a substantially flat bottom and terminates short of the end of the tongue portion so as to facilitate insertion of fasteners impaled on a second wallboard panel behind a mounted first wallboard panel as the panels are assembled on a wall. The invention also relates to a method for assembling such a wall.

It is an object of the invention to provide a mechanical fastener appendant which will invisibly secure wallboard panels to ordinary wood or metal framing members.

A particular object of this invention is to provide a building structure, such as a wall, wherein fastener appendants coengageably secure wallboard panels along abutting joints in a tongue and groove relationship.

A further object of the invention is to provide a building structure of the type described wherein the wallboard panels are removably attached to the supporting framing members.

Yet another object of the invention is to provide mechanical fastener appendants that may be joined to common wallboard panels by piercing just prior to installation of the panels.

Further objects and advantages of the invention will be brought out in the drawings and in this description, in which the purpose is to disclose a preferred embodiment of the invention, without placing limitations thereon.

Referring to the accompanying drawings, which are for illustrative purposes only:

FIG. **1** is an isometric view of a preferred configuration of an impaling fastener appendant;

FIG. **2** is a fragmentary isometric view of a common wallboard panel with an impaling fastener joined thereto;

FIG. **3** is a cross-sectional view taken along plane **3—3** of FIG. **2**, viewed in the direction of the arrows;

FIG. **4** is a partial elevational view of a wall or partition assembly of this invention, with some of the wallboard panels removed to reveal the exposed portion of the fastened appendant tabs;

FIG. **5** is a partially cut-away isometric view showing a wallboard panel with the impaling appendant tab secured to a common metal stud framing member by an ordinary self-drilling screw fastener; and

FIG. **6** is a partial elevational view of a wall assembly illustrating the sequential installation of the coengaged wallboard panels.

Referring to FIG. **1**, an impaling fastener appendant **10** is shown formed of a unitary integral sheet of metal, such as spring steel. The appendant **10** is comprised of a plate portion **12**, a central tongue portion **14**, a pair of discrete web portions **16** and **18**, each with a wallboard impaling terminal penetrant portion **20** and **22**, respectively. A longitudinally axially located flat bottomed

and walled depressed area or indentation **24** is struck across plate portion **12** and tongue portion **14** to (a) act as a stiffening rib, (b) increase the effective thickness of the tongue **14** and the plate **12** portions and (c) provide a well for the head of a fastener such as a screw or nail. A longitudinally axially located slot **26** or a hole may be provided in this depressed or indented portion **24** of the tongue **14** to facilitate convenient mechanical fastening. Sides **15** and **17** of tongue **14** are spaced apart from sides **19** and **21** of web portions **16** and **18**, respectively so that clearance openings **23** and **25** between the web and the tongue are provided.

In FIGS. **2** and **3** the fastener appendant **10** has been installed by impalement on common wallboard panel **28**. Such wallboard panels are often comprised of a semi-rigid center composition **30**, such as gypsum, an outer wrap **32**, such as paper and a decorative surface cover **34**, such as embossed vinyl plastic. In practice, the appendants **10** are installed by impalement on wallboard panels **28** by placing plate portion **12** in firm flat contact with the back surface **36** of wallboard panel **28**, as shown in FIG. **3**, to cause pointed penetrants **20** and **22** to impale wallboard panel **28** at the approximate midpoint of its end surface **38**. The appendant penetration is easily accomplished by striking web portions **16** and **18** alternately.

For proper appendant location on each wallboard panel, it has been found to be convenient to pencil or scribe spaced lines on the back side of each wallboard panel along marginal edges at quarter points. This spaces the lines two, four, and six feet distant from the top end of a common eight foot high panel. The appendants are then installed by impalement slightly above the scribed lines on the left marginal edge, and the appendants are installed slightly below the scribed lines on the right marginal edge of each wallboard panel. This appendant layout is desirable to insure the by-pass of opposing appendants of abutting wallboard panels when vertically erected on the framing members, as illustrated in FIG. **4**, which illustrates a typical wall structure or partition of the type contemplated according to a broad concept of the invention. The wall structure comprises common sheet metal framing members, including laterally spaced apart stud members **40** which have their upper and lower ends frictionally retained in rigid channel shaped runners **42** and **44**, mounted on ceiling and floor, respectively, with open channel sides in confronting relationship to receive the respective ends of the studs.

The wallboard panel erection of the partition in FIG. **4** was begun in a left corner (not shown) and is proceeding sequentially to the right. Wallboard panels **28*a*** and **28*b*** have been secured to upper and lower channels **42** and **44** by common drywall screws **46**. The exposed screw heads are later concealed across the top marginal edge with a common ceiling trim runner (not shown) and concealed along the bottom marginal edge with a common baseboard trim runner (not shown). Only the abutting vertical edges of the wallboard panels are secured with the fastener appendants of this invention. Appendant tabs **10R**, installed along the right vertical marginal eges of wallboard panels **28*a*** and **28*b*** are secured to the vertical stud runners **40** by common sheet metal screws **50**. Offset appendant tabs **10L**, impaled along the left vertical marginal edge of wallboard panel **28*b***, are frictionally disposed behind the previously fastened abutting wallboard panel and between it and stud **40** in a tongue and groove relationship.

The sequence of the panel erection is better illustrated in FIGS. **5** and **6**. In FIG. **5** the wallboard panel **28*b*** is cut away to better display the fastener appendant **10R**, which is secured to a common sheet metal stud **40** by a common self-drilling screw **50**. Wallboard panel **28*b*** is rigidly held, slightly off the framing member front surface **52**, making clearance, slot or groove **54** between the back surface of the wallboard panel **28*b*** and stud **40** and between the appendants **10R** for convenient insertion of offset appendant tabs **10L** of abutting wallboard panel **28*c***, as illustrated in FIG. **6**. It should be noted that the metal stud represents only one of the many common types of framing members and the use of the appendant fasteners of this invention is not limited to framing members of this configuration. On the contrary, a unique advantage of the screw or nail fastened appendant is its ability to work equally well on any flat surfaced wall framing members, wood or metal. While appendant fastener tabs installed by impalement on common wallboard panels at the job site give excellent results, it is intended that the appendants of this invention could be attached at the wallboard manufacturing plant with an adhesive or other suitable means and transported with the panels to the job site.

Although it is a feature of this invention that the decoratively covered wallboard is especially usefully held together in a wall structure with concealed fasteners (because the strength of the cover of vinyl or other polymeric or fibrous or cloth material increases the strength of the panel and prevents cracking and crushing of the panel when the fasteners are attached) the present fasteners may also be used with panels of ordinary wallboard, whether of gypsum board, wood, porous polymer, e.g., foamed polyurethane or polyester, or other suitable construction material, and the mentioned advantages are obtainable. Of course, such materials should be malleable or otherwise distortable enough in response to the forces of application so that the impaling points and the adjacent webs may be inserted into the material and will not be objectionably visible after installation. Additionally, it is desirable for the covering (of polyvinyl chloride or other functionally acceptable material) to help to hold the impaling means in position and sometimes it may be useful for the impaling points to have barbed portions thereon to prevent ready removal.

The closest prior art known to applicant which may be relevant to the present invention is that which was cited by the Examiner and applicant in the prosecution of parent patent No. 4,117,644.

The invention has been described with respect to various embodiments and illustrations thereof but is not to be considered as limited to them because it is evident that one of skill in the art with the present specification before him will be able to utilize substitutes and equivalents without departing from the spirit of the invention.

What is claimed is:

1. A wall or partition comprising first and second coplanar edge-abutting wallboard panels, invisibly secured together along a joinder line at a wall framing member by a first series of a plurality of spaced apart fasteners joined to the first wallboard panel at the abutting edge thereof and held to the framing member, a second series of spaced apart fasteners joined to the second wallboard panel along the abutting edge thereof and with parts of the fasteners extending parallel to said panel from the back side thereof, said second series of fasteners being so located as to avoid contact with said

first series of fasteners and said extending parts of said second series of fasteners when the wallboard panels are in coplanar edge-abutting relationship, contacting the back side of the first panel and, in conjunction with the framing member, preventing said second panel from moving away from said framing member in a direction having a component at right angles to the plane of the panels, which wallboard fasteners are each of a single piece of sheet metal having a substantially flat plate portion, a tongue portion extending from the plate portion and coplanar therewith, a pair of web portions, one on each side of the tongue portion and each extending at a right angle from said plate portion and an impaling flange portion extending from each web portion in the same direction, essentially parallel to and overlying said plate portion and opposite to the direction in which the tongue extends, so that the plate portion may contact the surface of the wallboard panel while the impaling flange portion is impaling said panel at an edge thereof, with said fasteners including a walled depressed area in the plate and tongue portions with a longitudinal slot in the tongue portion, which depression extends in a direction opposite to that in which the webs extend.

2. A wall according to claim **1** wherein the abutting edges of the panels are square to the plane of the panels and where in the wallboard fasteners the depressed area in the plate and tongue portions is of such a depth as to allow the head of a mounting screw passing through the slot in said depressed area to be below the surface of the tongue portion of the fastener, the depressed area has a substantially flat bottom and terminates short of the end of the tongue portion so as to facilitate insertion of fasteners impaled on a second wallboard panel behind a mounted first wallboard panel as the panels are assembled on a wall, and the fasteners are free of impaling portions extending in the direction of the tongue portion and are free of webs extending beyond the depression from the tongue and from the plate portions in the direction the depression extends from such portions.

3. A wall according to claim **2** where in each of the fasteners sides of the web portions near the sides of the tongue portion are spaced away from said tongue portion.

4. A wall according to claim **3** where in each fastener the slot therein extends to the plate portion thereof.

5. A wall according to claim **2** wherein the wallboard panels are each of gypsum covered with paper and vinyl materials and each of the wallboard fasteners is of spring steel and comprises a substantially rectangular flat plate portion, a substantially rectangular tongue portion coplanar with the plate portion and extending longitudinally axially from it, a longitudinally axially located flat bottomed depressed area in both plate and tongue portions and a longitudinally axially located slot opening therethrough in the tongue portion, between each of the webs and the plate portion there is a clearance opening and which fasteners are free of impaling portions extending in the direction of the tongue portion and are free of webs extending beyond the depression from the tongue and from the plate portions in the direction the depression extends from such portions.

6. A wall or partition according to claim **1** wherein each fastener is of steel and comprises a substantially rectangular flat plate portion, a substantially rectangular tongue portion coplanar with the plate portion and extending longitudinally axially from it, a longitudinally axially located flat bottomed depressed area in both plate and tongue portions and a longitudinally axially located slot opening therethrough in the tongue portion, and in which, between each of the webs and the plate portion there is a clearance opening.

7. A wall or partition comprising first and second coplanar edge-abutting panels, invisibly secured together along a joinder line at a wall or partition framing member by a first series of a plurality of spaced apart fasteners joined to the first panel at the abutting edge thereof and held to the framing member, a second series of spaced apart fasteners joined to the second panel along the abutting edge thereof and with parts of the fasteners extending parallel to said panel from the back side thereof, said fasteners of the second series of fasteners being so located as to avoid contact with said fasteners of the first series of fasteners and said extending parts of said fasteners of the second series of fasteners, when the wallboard panels are in coplanar edge-abutting relationship, contacting the back side of the first panel and, in conjunction with the framing member, preventing said second panel from moving away from said framing member in a direction having a component at right angles to the plane of the panels, which fasteners are each of a single piece of sheet metal having a substantially flat plate portion, a tongue portion extending from the plate portion and coplanar therewith, a pair of web portions, one on each side of the tongue portion and each extending at a right angle from said plate portion and an impaling flange portion extending from each web portion in the same direction, essentially parallel to and overlying said plate portion and opposite to the direction in which the tongue extends, so that the plate portion may contact the surface of the panel while the impaling flange portion is impaling said panel at an edge thereof, with said fasteners including a walled depressed area in the plate and/or tongue portion(s) with a longitudinal slot in the plate and/or tongue portion(s), which depression extends in a direction opposite to that in which the webs extend.

8. A wall according to claim **7** wherein the panels are wallboard panels, the longitudinal slot is in the tongue portion, the abutting edges of the panels are square to the plane of the panels and where in the wallboard fasteners the depressed area is of such a depth as to allow the head of a mounting screw passing through the slot in said depressed area to be below the surface of the tongue portion of the fastener, the depressed area has a substantially flat bottom and terminates short of the end of the tongue portion so as to facilitate insertion of fasteners impaled on a second wallboard panel behind a mounted first wallboard panel as the panels are assembled on a wall, and the fasteners are free of impaling portions extending in the direction of the tongue portion and are free of webs extending beyond the depression from the tongue and from the plate portions in the direction the depression extends from such portions.

9. A wall according to claim **8** where in each of the fasteners the depressed area is in both the plate and tongue portions and the sides of the web portions near the sides of the tongue portion are spaced away from said tongue portion.

10. A wall or partition according to claim **7** wherein each fastener is of steel and comprises a substantially rectangular flat plate portion, a substantially rectangular tongue portion coplanar with the plate portion and extending longitudinally axially from it, a longitudinally axially located flat bottomed depressed area in both plate and tongue portions and a longitudinally axially

located slot opening therethrough in the tongue portion and extending to the plate portion.

11. A wall according to claim 7 wherein the described panels are each of gypsum covered with paper and vinyl materials and each of the described fasteners is of spring steel and comprises a substantially rectangular flat plate portion, a substantially rectangular tongue portion coplanar with the plate portion and extending longitudinally axially from it, a longitudinally axially located flat bottomed depressed area in plate and/or tongue portions and a longitudinally axially located slot opening therethrough in the tongue portion, the sides of the web portions and the sides of the adjacent tongue portions being spaced apart, and the fasteners being free of impaling portions extending in the direction of the tongue portion and free of webs extending beyond the depression from the tongue and from the plate portions in the direction the depression extends from such portions.

12. A wall or partition comprising first and second coplanar edge-abutting panels, invisibly secured together along a joinder line at a wall framing member by a first series of a plurality of spaced apart fasteners joined to the first panel at the abutting end thereof and held to the framing member, a second series of spaced apart fasteners joined to the second panel along the abutting end thereof and with parts of the fasteners extending parallel to said panel from the back side thereof, said fasteners of the second series of fasteners being so located as to avoid contact with said fasteners of the first series of fasteners and said extending parts of said fasteners of the second series of fasteners, when the wallboard panels are in coplanar edge-abutting relationship, contacting the back side of the first panel and, in conjunction with the framing member, preventing said second panel from moving away from said framing member in a direction having a component at right angles to the plane of the panels, which fasteners of the first series are each of a single piece of sheet metal having a substantially flat first panel contacting plate portion, a substantially flat second panel contacting tongue portion coplanar with the plate portion and extending from it, a pair of first and second panel edge contacting web portions extending at right angles from said plate portion, a pair of first panel impaling flange portions extending from said web portions in the same direction, essentially parallel to and overlying said plate portion and penetrating said first panel at an abutting end thereof, and a substantially flat bottomed framing contacting portion defined by a walled and interjacent portion extending in a direction essentially opposed to that in which the web portions extend, thus spacing apart the panel contacting and framing contacting portions of the fastener and strengthening it.

13. A fastener, useful with other such fasteners for holding first and second coplanar end-abutting panels together invisibly, which comprises a single piece of sheet metal having a substantially flat plate portion, a tongue portion extending from the plate portion and coplanar therewith, a pair of web portions, one on each side of the tongue portion and each extending at right angles from said plate portion and a pair of impaling flange portions or points extending from the web portions in the same direction, essentially parallel to and overlying said plate portion and opposite to the direction in which the tongue extends, so that the plate portion may contact the surface of a panel while the impaling flange portions are impaling said panel at an end thereof, said fastener including an interjacently walled area in the plate and/or tongue portion(s) thereof, with a longitudinal slot in the plate and/or tongue portion(s), which walled area extends in a direction substantially opposed to that in which the webs extend so that the described area is on the side of the plate and/or tongue opposite to that of the impaling flanges, thus spacing apart the panel contacting and framing contacting portions of the fastener and strengthening it.

* * * * *