US 20070025421A1

(19) **United States**

(12) **Patent Application Publication** (10) **Pub. No.: US 2007/0025421 A1**

Shattil (43) **Pub. Date: Feb. 1, 2007**

(54) **METHOD AND APPARATUS FOR USING MULTICARRIER INTERFEROMETRY TO ENHANCE OPTICAL FIBER COMMUNICATIONS**

(76) Inventor: **Steve Shattil**, Boulder, CO (US)

Correspondence Address:
SONNENSCHEIN NATH & ROSENTHAL LLP
P.O. BOX 061080
WACKER DRIVE STATION, SEARS TOWER
CHICAGO, IL 60606-1080 (US)

(21) Appl. No.: **11/424,176**

(22) Filed: **Jun. 14, 2006**

Related U.S. Application Data

(60) Division of application No. 09/703,202, filed on Oct. 31, 2000, now Pat. No. 7,076,168, and which is a continuation-in-part of application No. 09/022,950, filed on Feb. 12, 1998, now Pat. No. 5,955,992.

(60) Provisional application No. 60/163,141, filed on Nov. 2, 1999.

Publication Classification

(51) **Int. Cl.**
H04B 1/00 (2006.01)
H04K 1/10 (2006.01)

(52) **U.S. Cl.** **375/136**; 375/260

(57) **ABSTRACT**

Multicarrier spreading codes map data symbols to a sequence of orthogonal pulse shapes generated from a superposition of orthogonal subcarriers. The orthogonal subcarriers may include OFDM subcarriers, frequency-hopped subcarriers, or chirped subcarriers. Multicarrier spread spectrum may employ a combination of orthogonal frequency division multiple access, time division multiple access, and code division multiple access. Receivers configured to use multi-user detection may employ a combination of time-domain processing and frequency-domain processing.

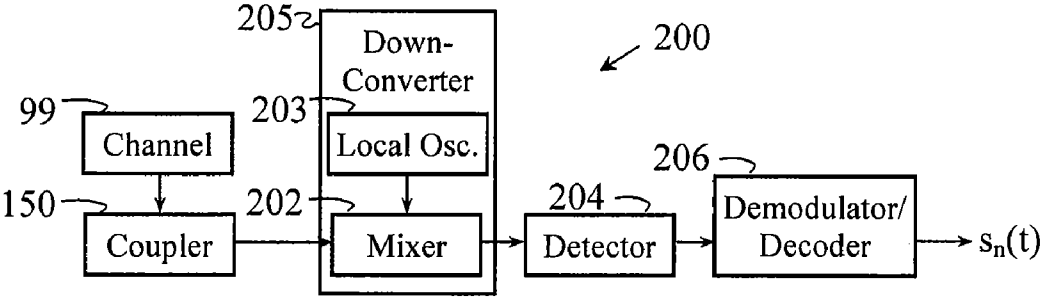

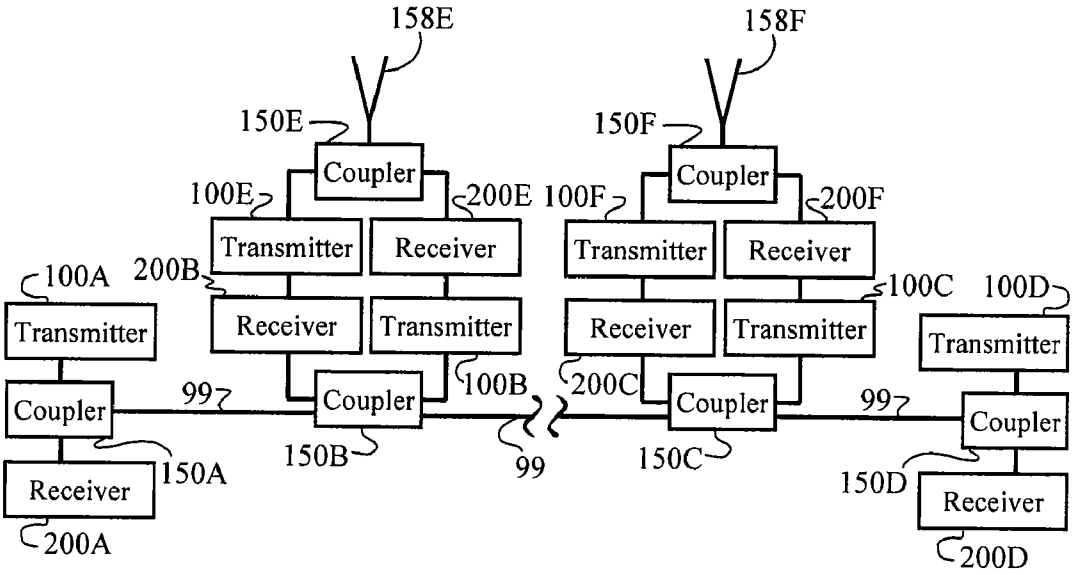
158E
158F
150E
150F
Coupler
Coupler
100E
200E
100F
200F
Transmitter
Receiver
Transmitter
Receiver
100A
200B
100C
100D
Transmitter
Receiver
Transmitter
Receiver
Transmitter
Coupler
99
Coupler
100B
200C
Coupler
99
Coupler
150A
150B
99
150C
150D
Receiver
Receiver
200A
200D

FIG. 1

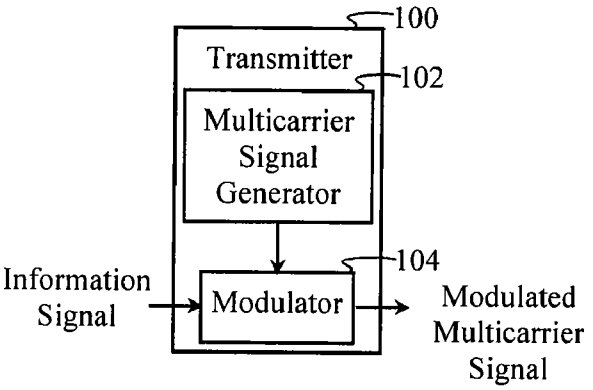
100
Transmitter
102
Multicarrier
Signal
Generator
104
Information
Signal
Modulator
Modulated
Multicarrier
Signal

FIG.2

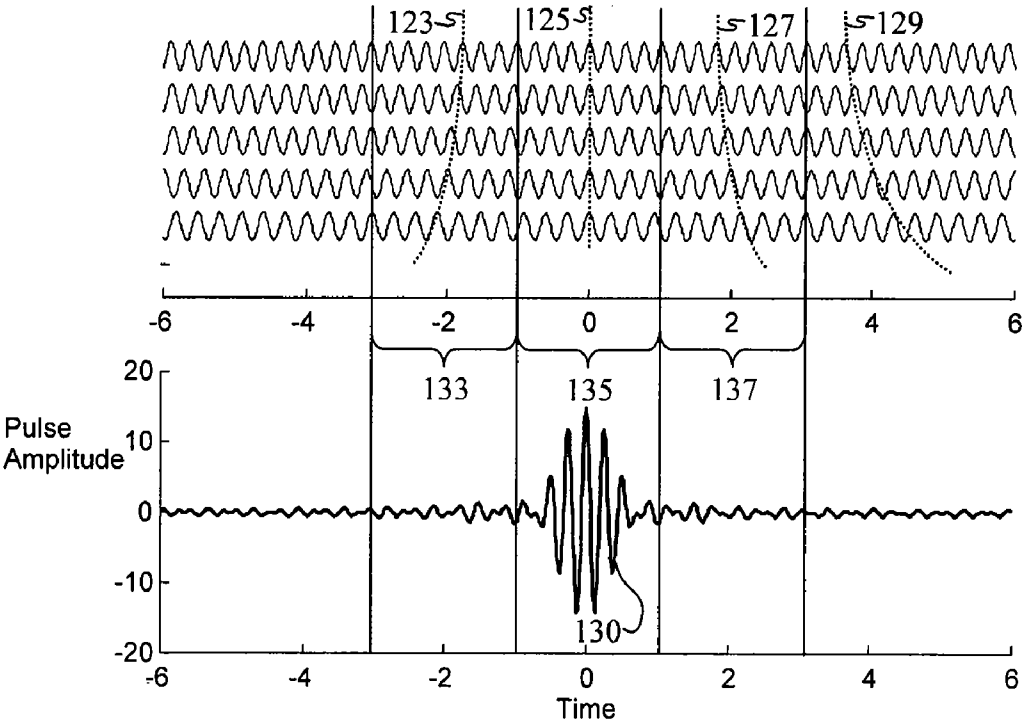

FIG.3A

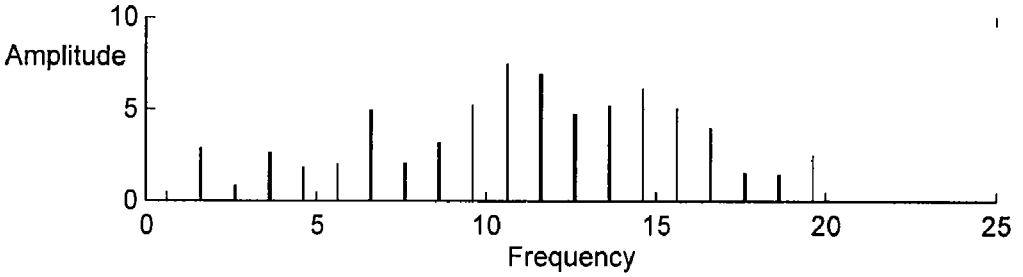

FIG.5A

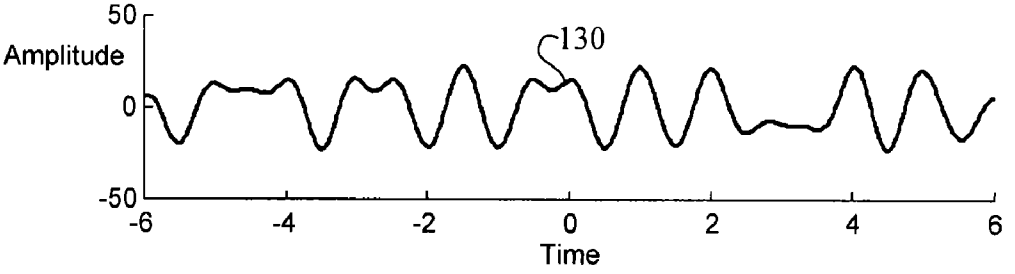

FIG.5B

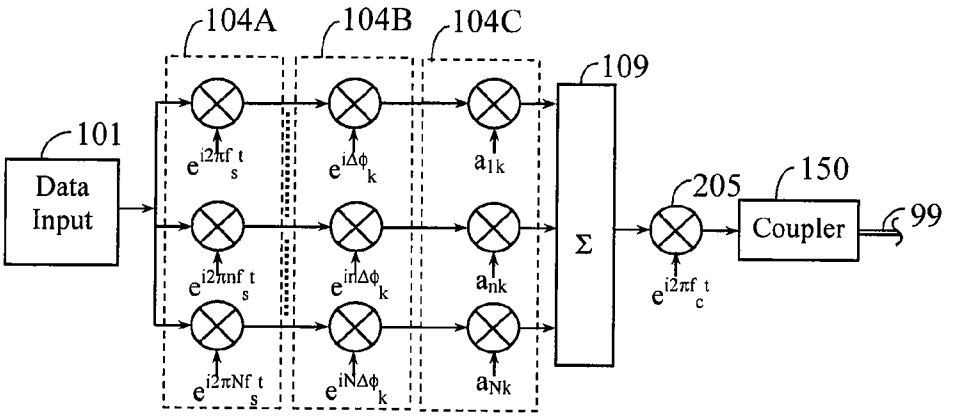

FIG. 3F

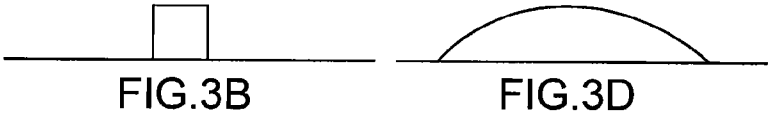

FIG.3B FIG.3D

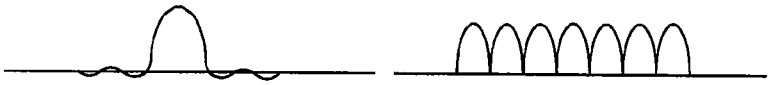

FIG.3C FIG.3E

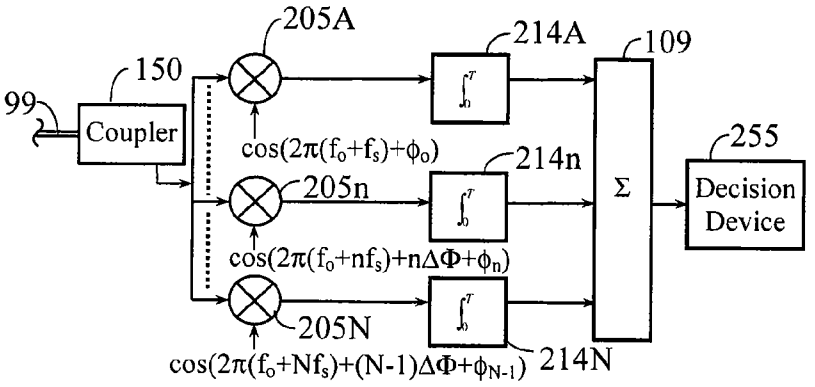

FIG. 3G

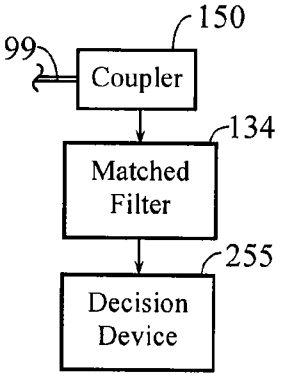

FIG.3H

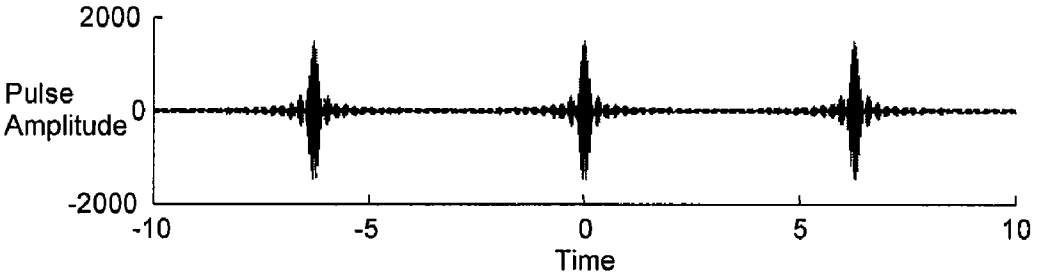

FIG. 4A

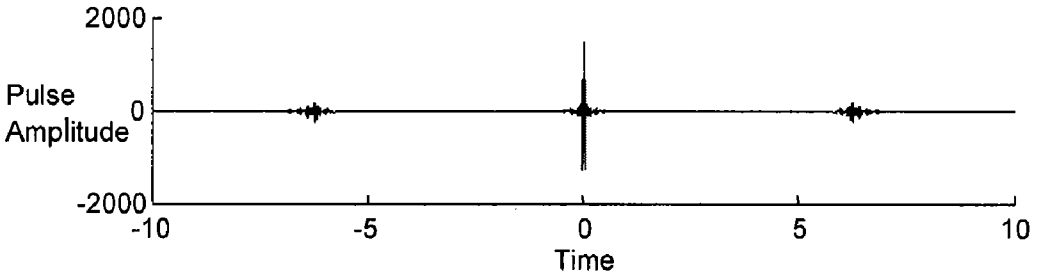

FIG.4B

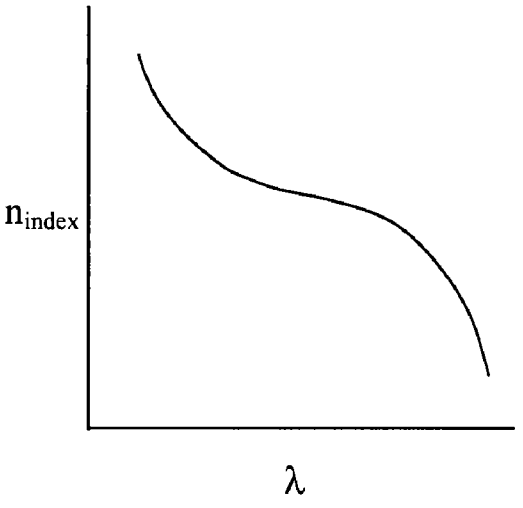

FIG. 8

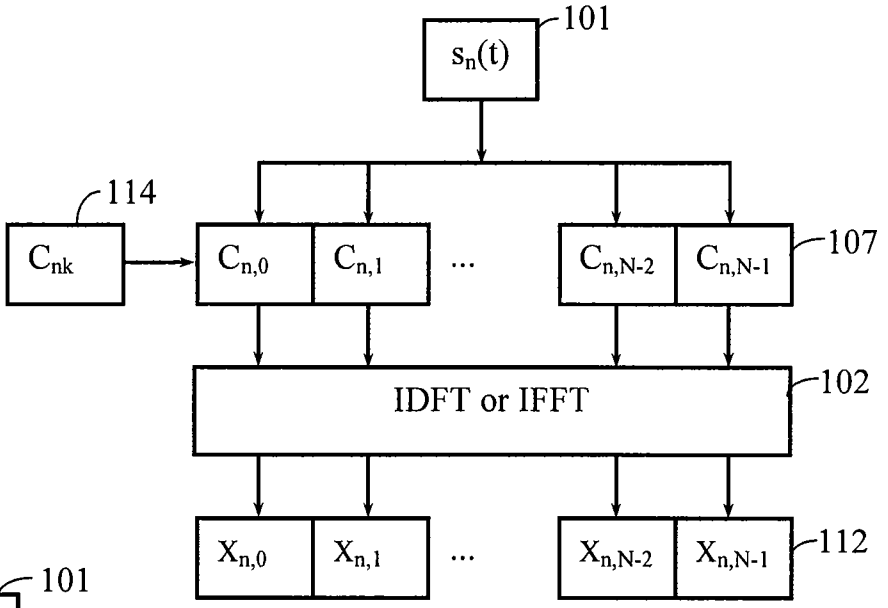

FIG. 6A

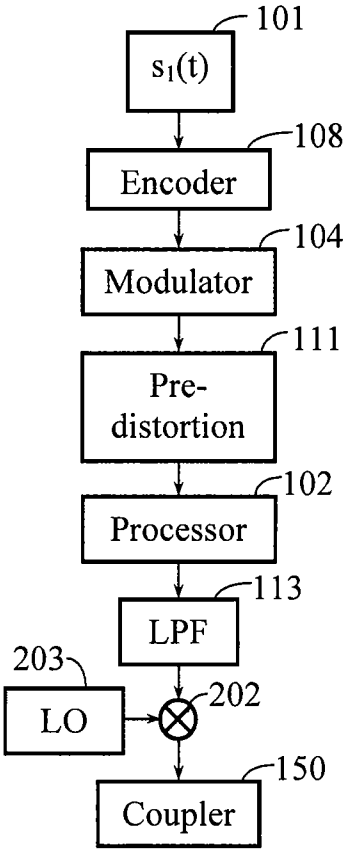

FIG. 6B

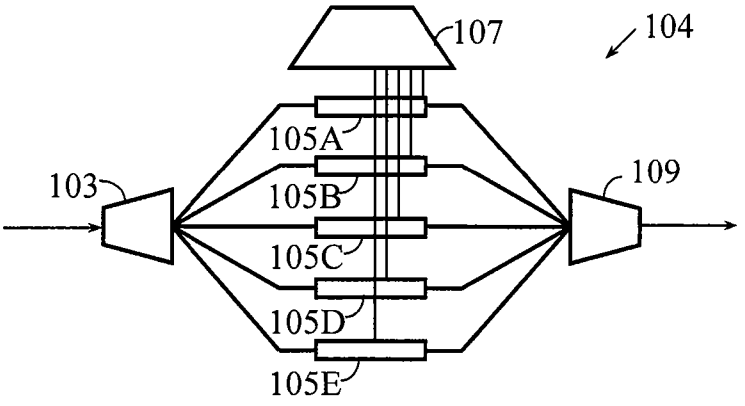

FIG. 7

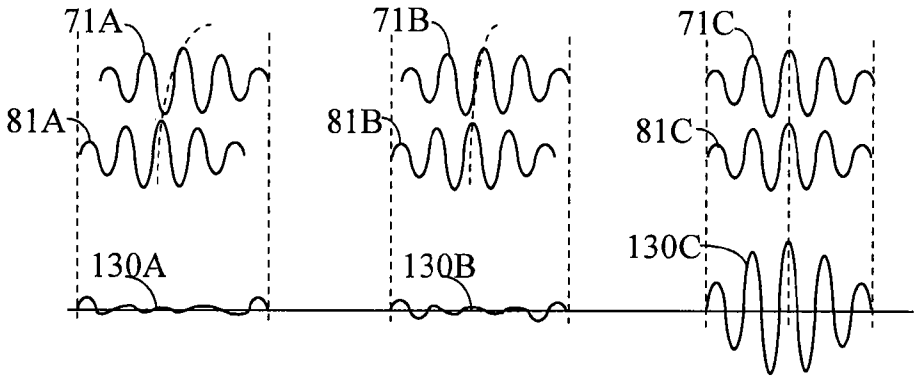

FIG. 9

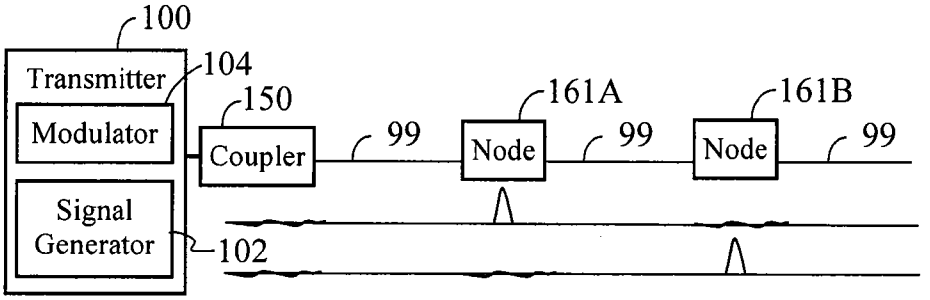

FIG. 10

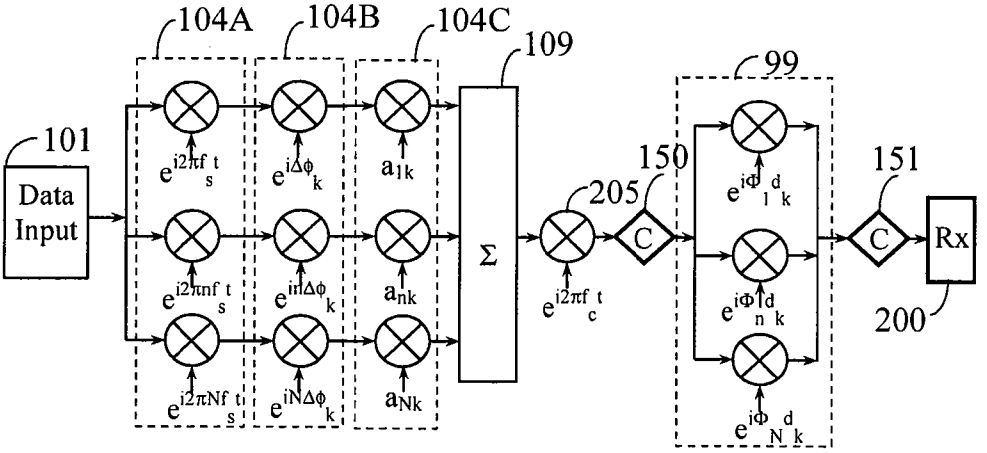

FIG. 11A

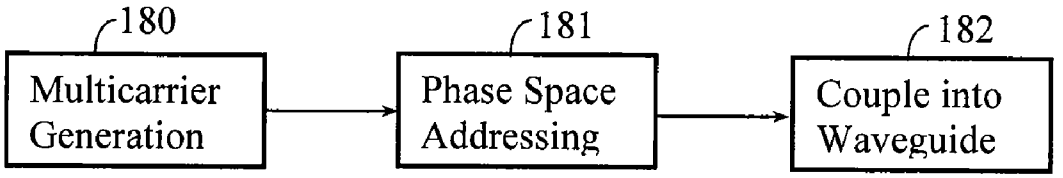

FIG. 11B

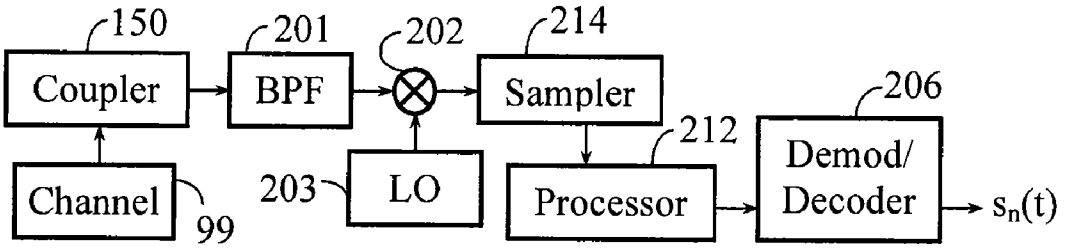

FIG. 12

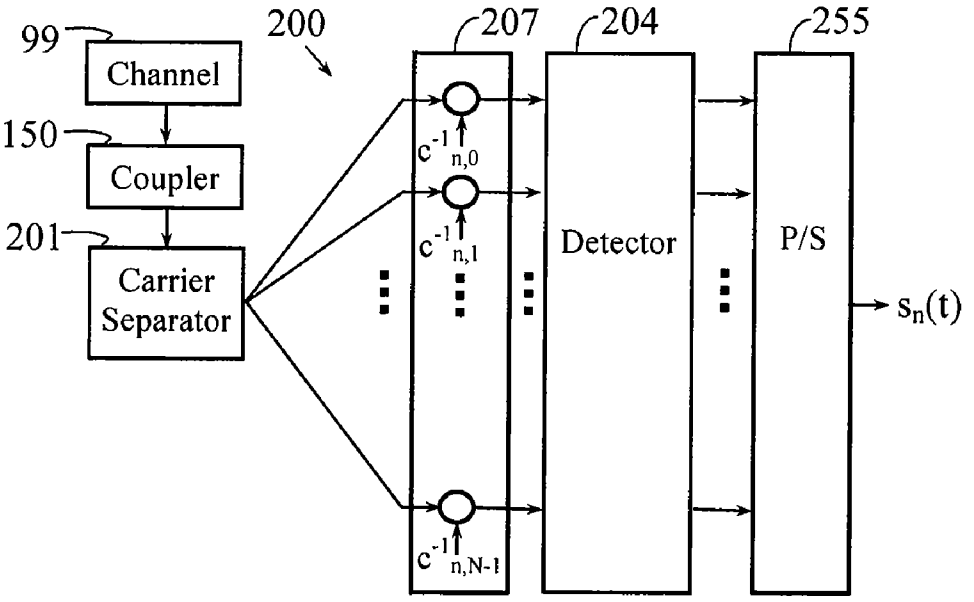

FIG. 13

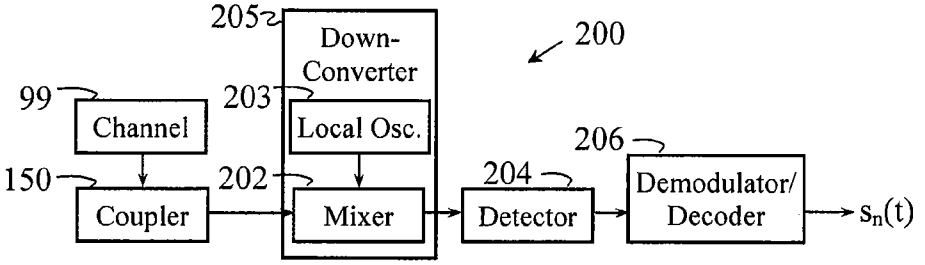

FIG. 14A

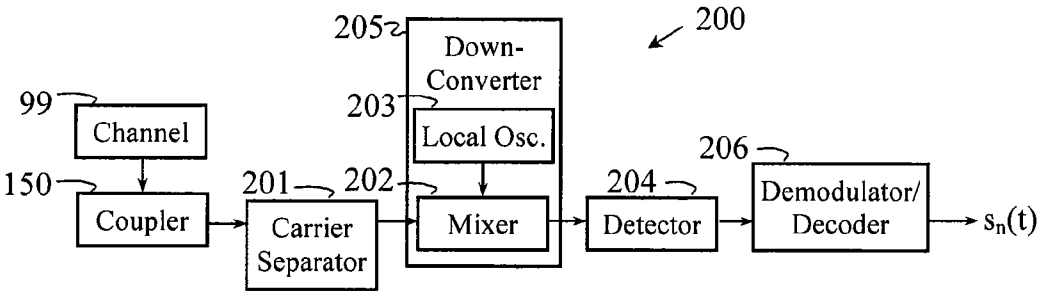

FIG. 14B

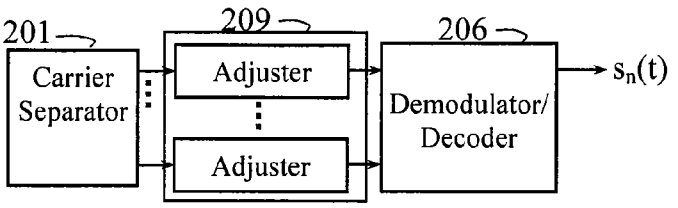

FIG. 14C

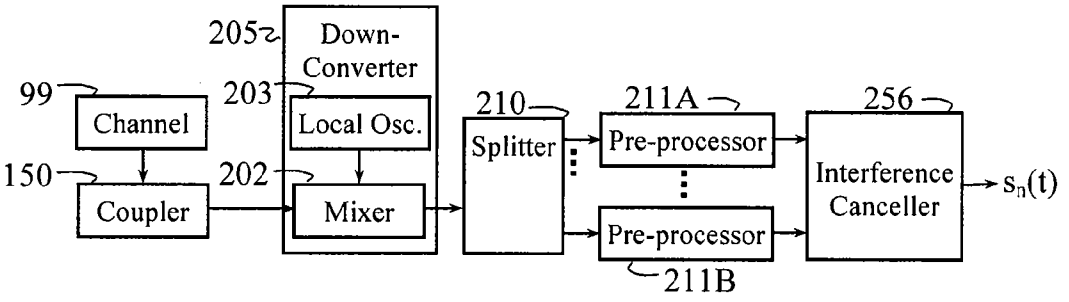

FIG. 14D

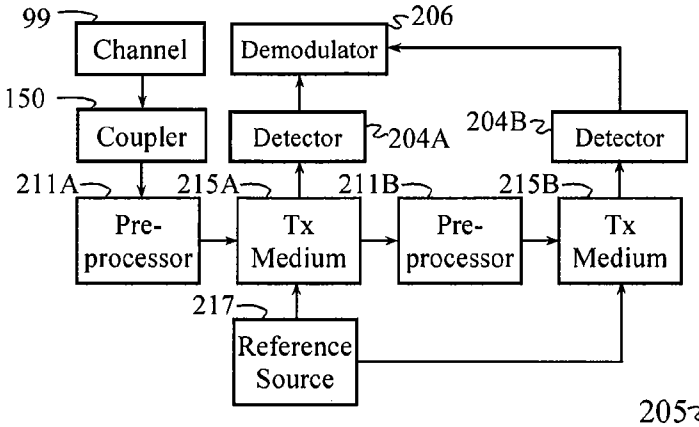

FIG. 14E

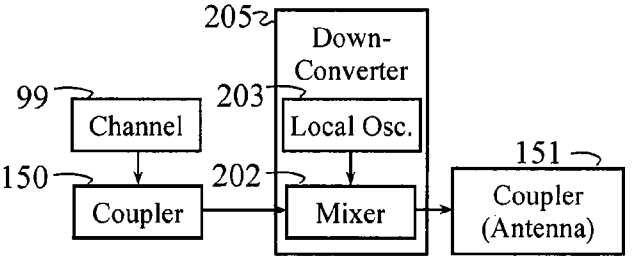

FIG. 15

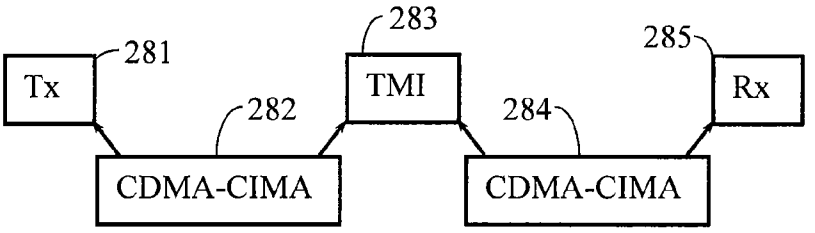

FIG. 16

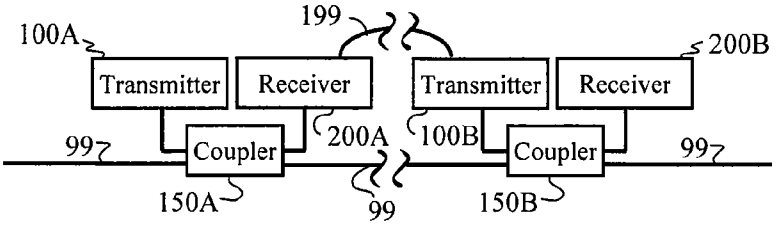

FIG. 17A

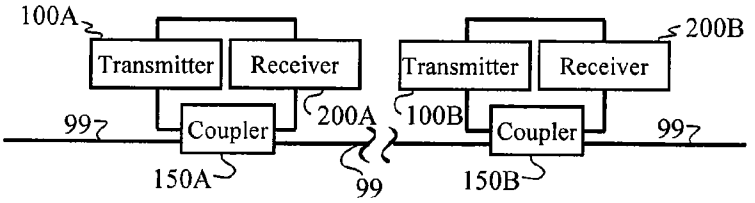

FIG. 17B

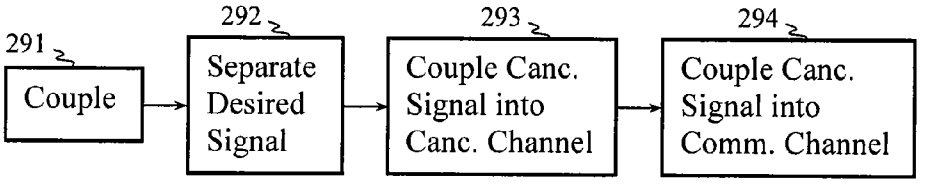

FIG. 17C

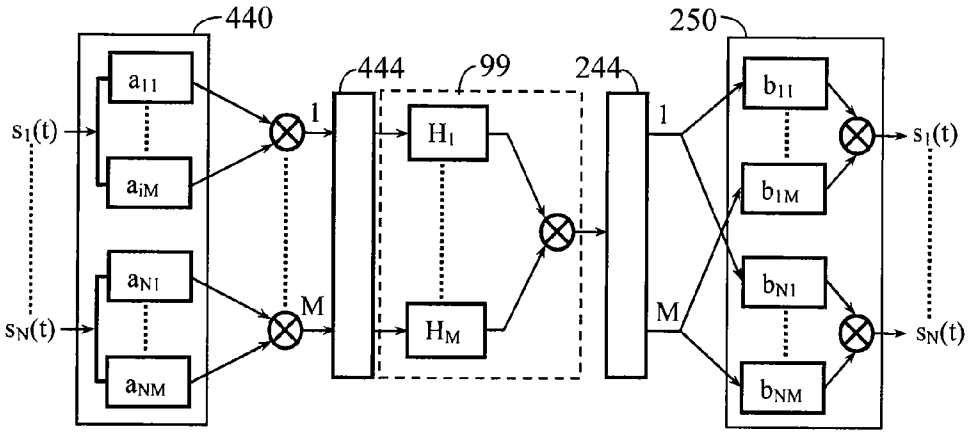

FIG. 18

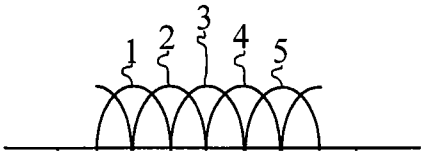

FIG. 19

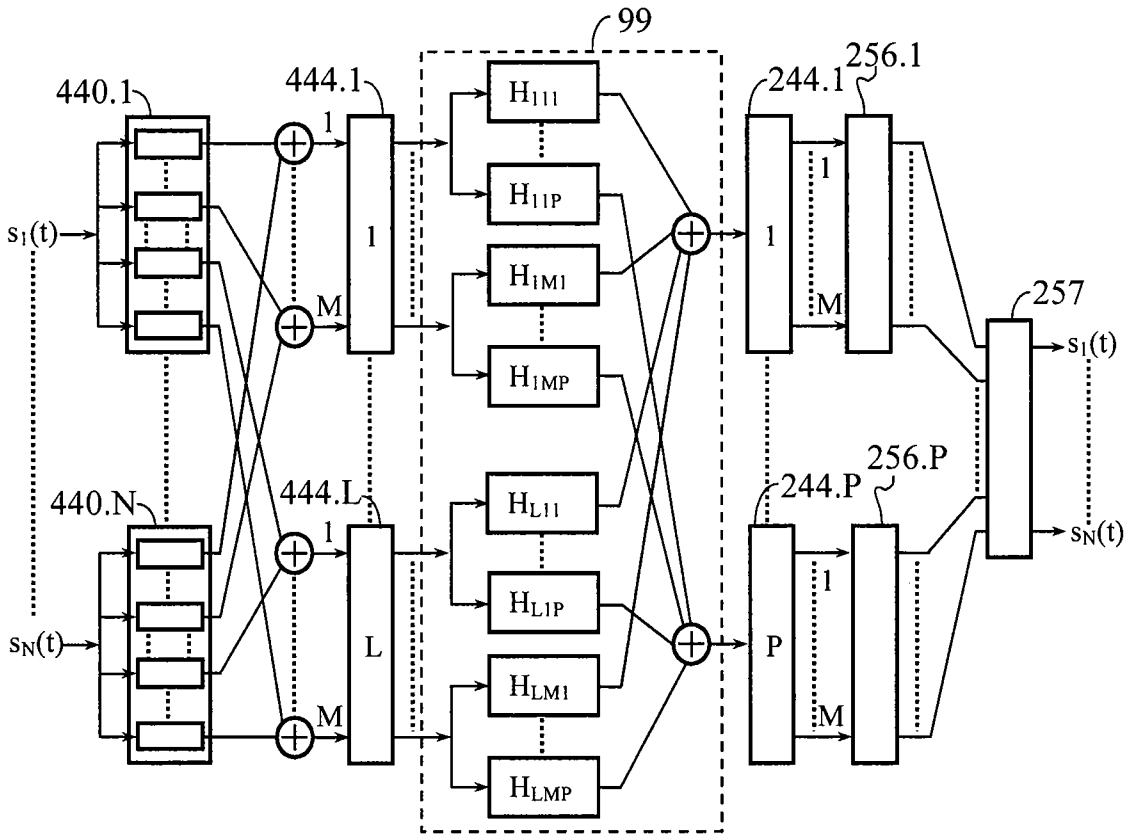

FIG. 20A

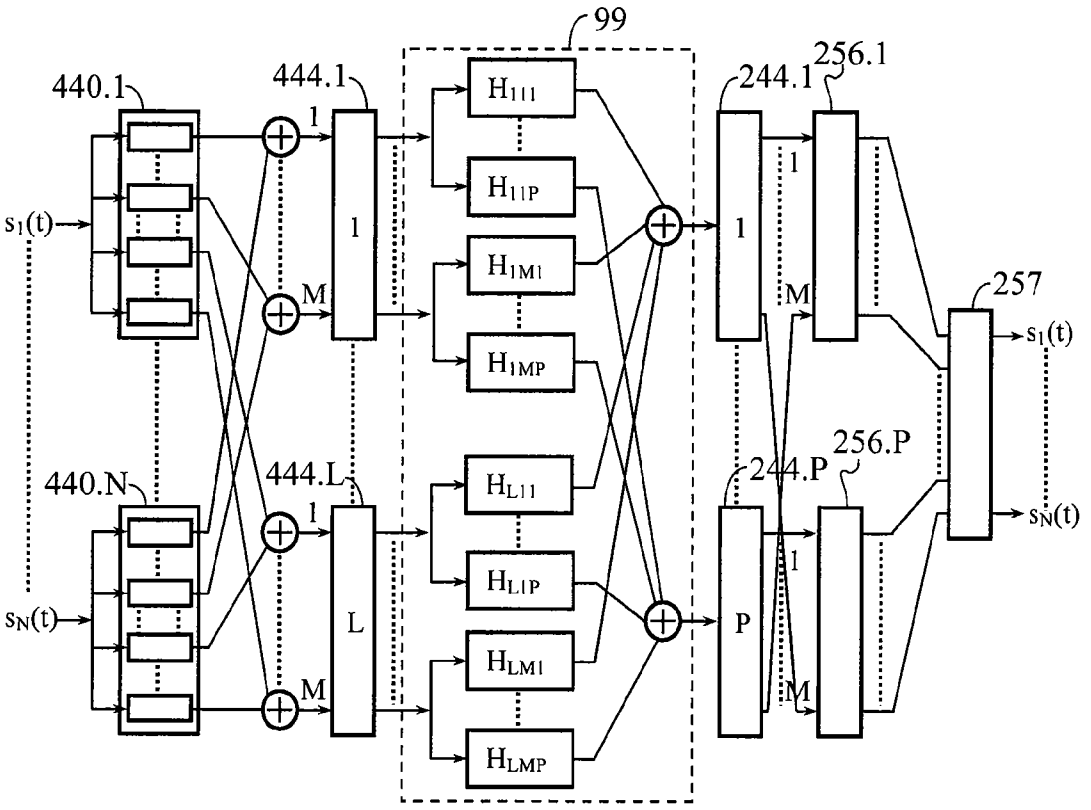

FIG. 20B

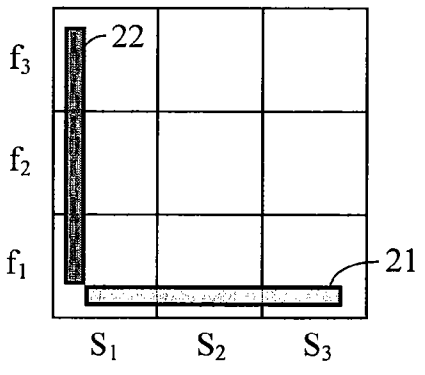

FIG. 21A

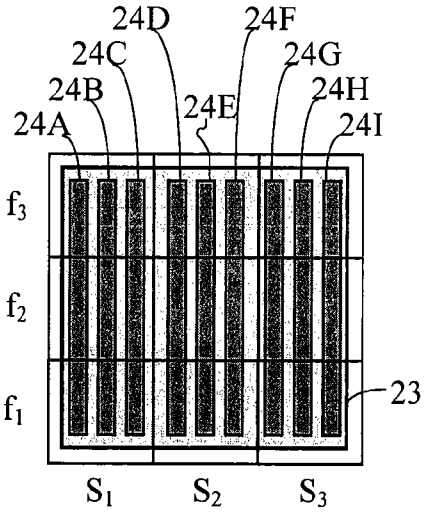

FIG. 21B

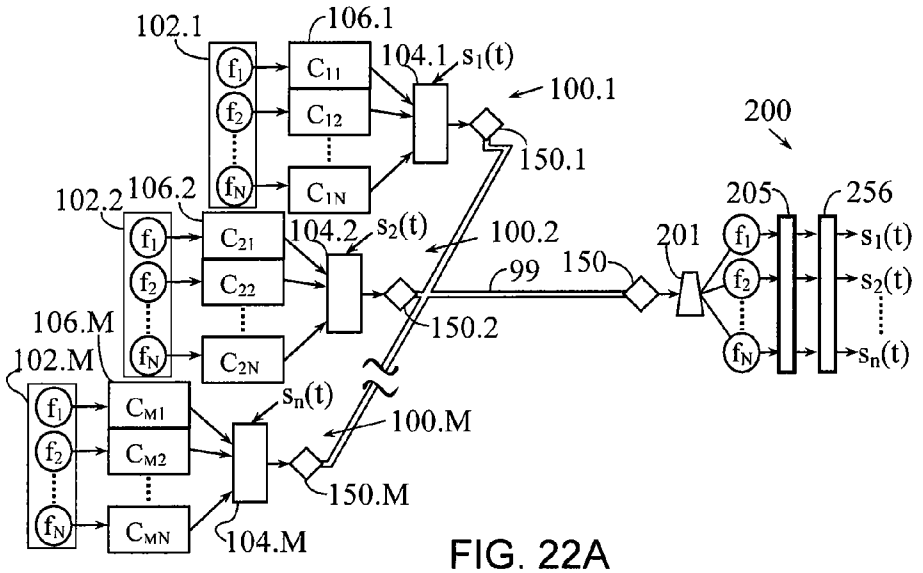

FIG. 22A

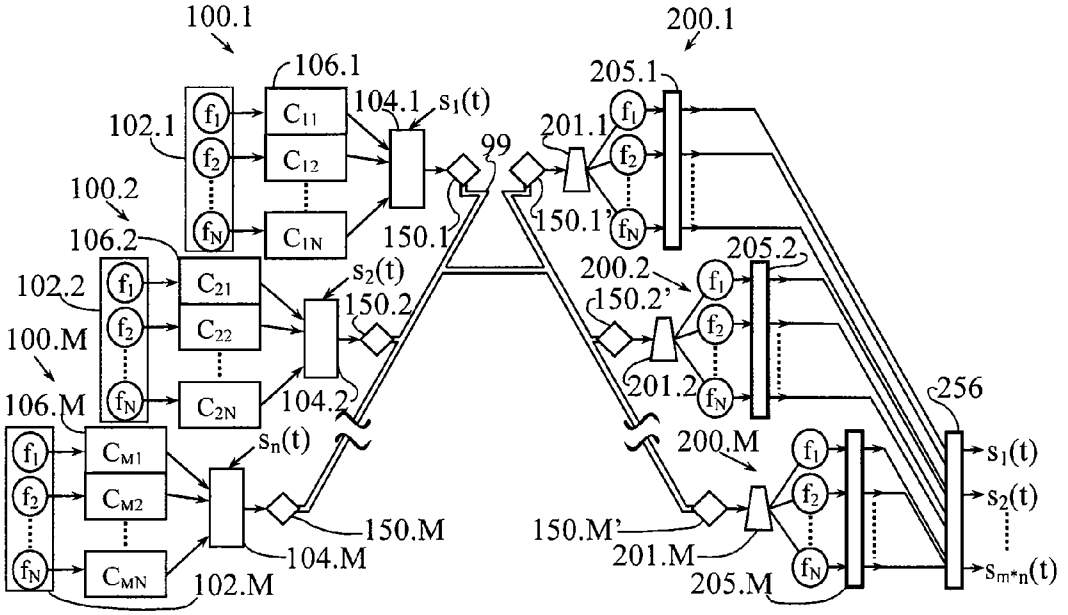

FIG. 22B

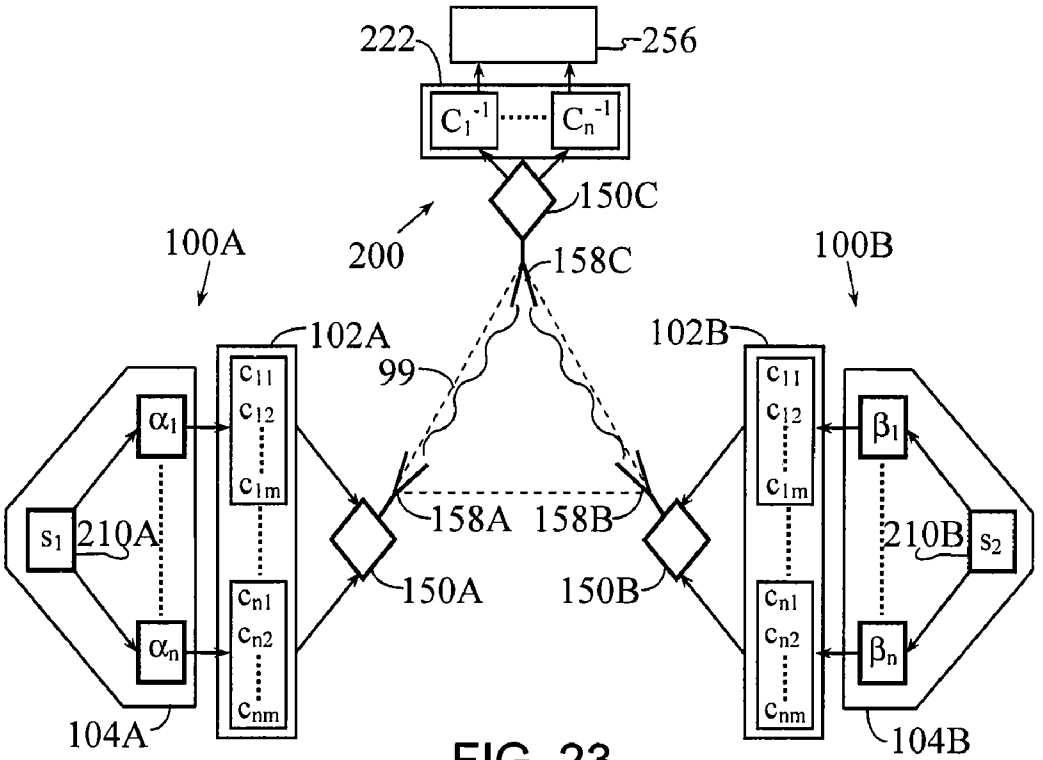
222
256
C_1^{-1}
C_n^{-1}
150C
100A
200
158C
100B
102A
102B
99
c_{11}
c_{12}
c_{1m}
c_{n1}
c_{n2}
c_{nm}
α_1
α_n
β_1
β_n
s_1
210A
158A
158B
210B
s_2
150A
150B
104A
104B

FIG. 23

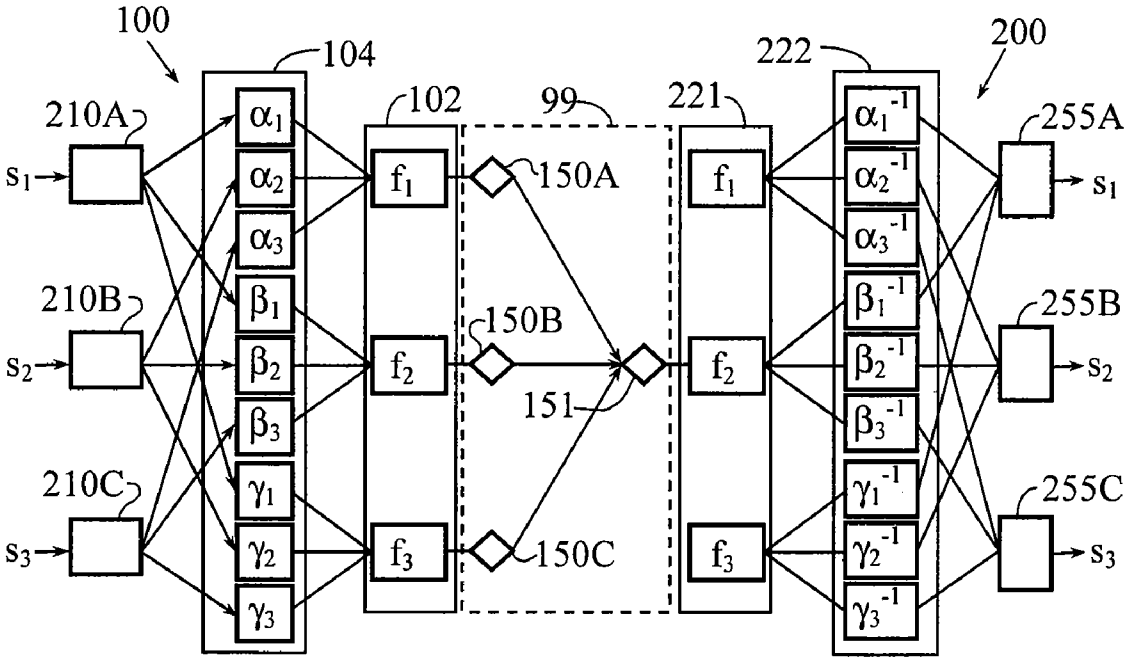
100
104
102
99
221
222
200
210A
210B
210C
s_1
s_2
s_3
α_1
α_2
α_3
β_1
β_2
β_3
γ_1
γ_2
γ_3
f_1
f_2
f_3
150A
150B
150C
151
α_1^{-1}
α_2^{-1}
α_3^{-1}
β_1^{-1}
β_2^{-1}
β_3^{-1}
γ_1^{-1}
γ_2^{-1}
γ_3^{-1}
255A
255B
255C

FIG. 24

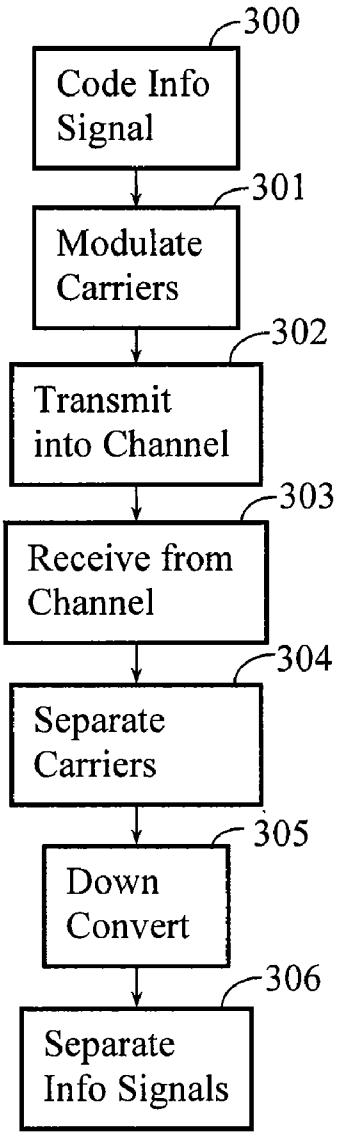

FIG. 25A

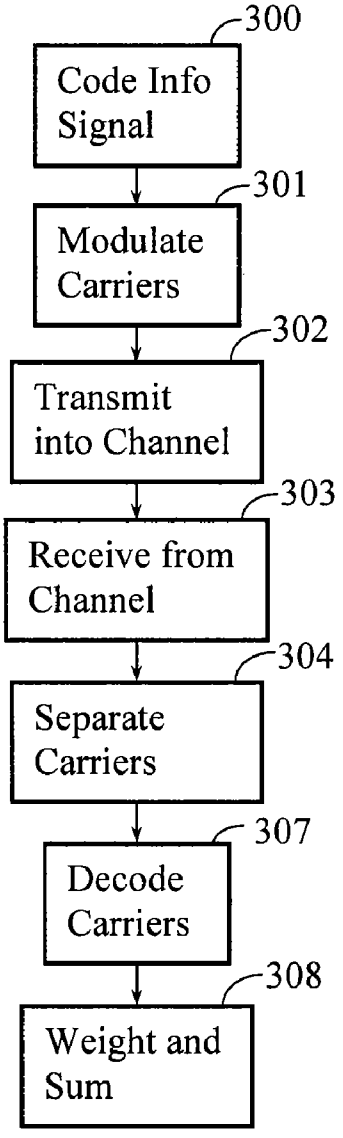

FIG. 25B

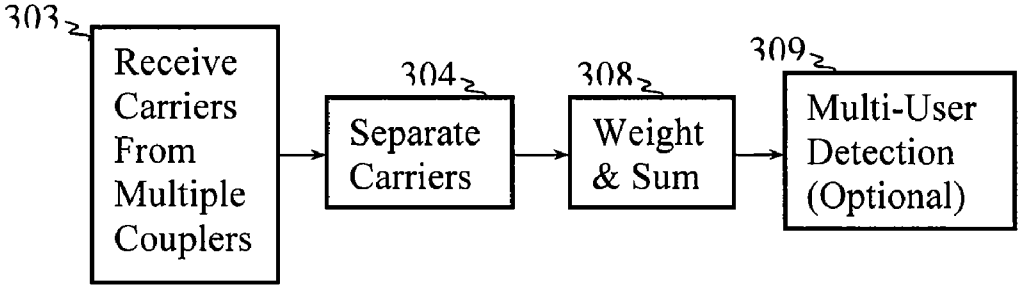

FIG. 25C

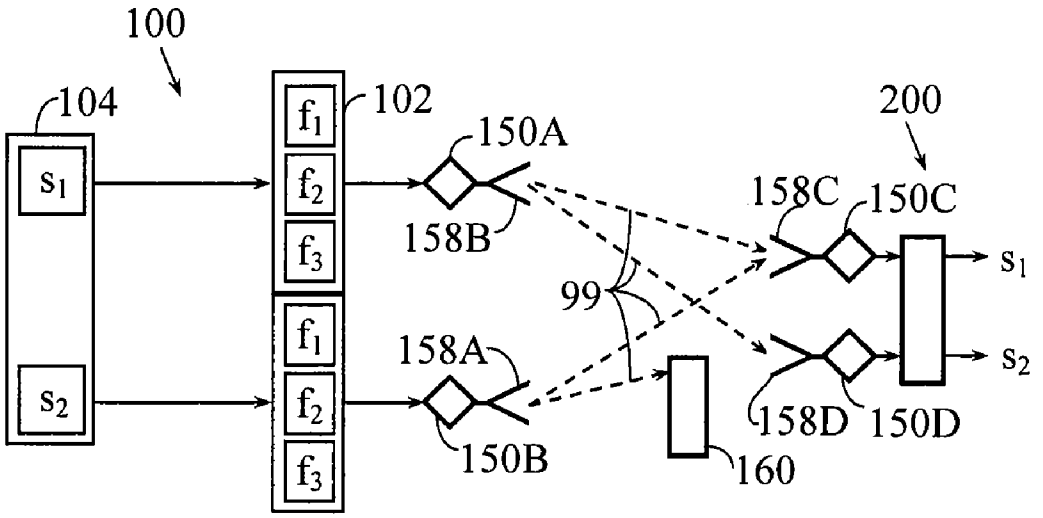
100
104
102
200
s_1
s_2
f_1
f_2
f_3
150A
158B
158A
150B
99
158C
150C
158D
150D
160
s_1
s_2

FIG. 26

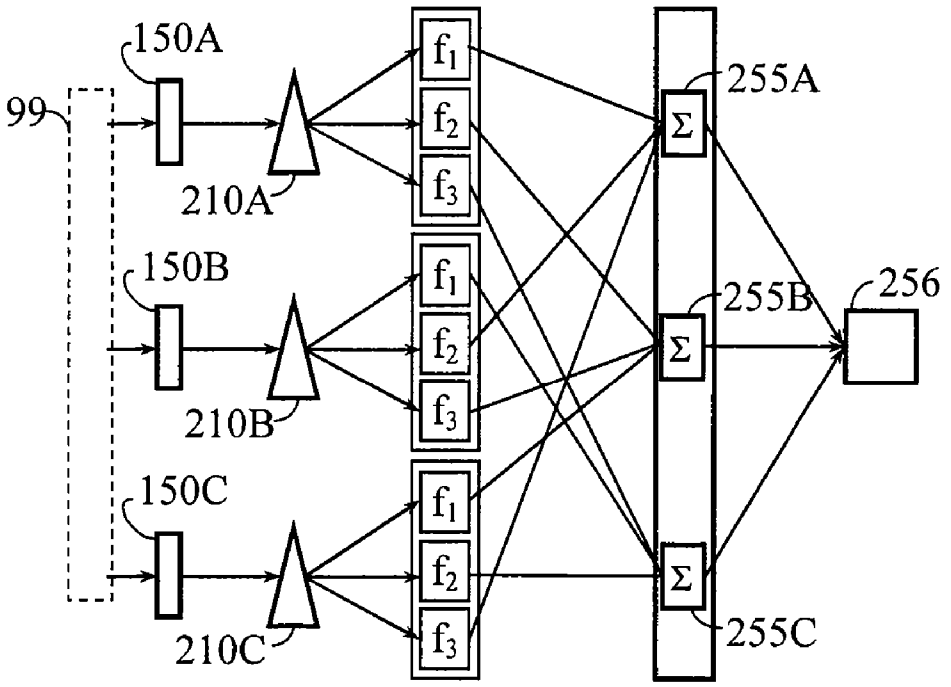
99
150A
150B
150C
210A
210B
210C
f_1
f_2
f_3
255A
255B
255C
Σ
256

FIG. 27

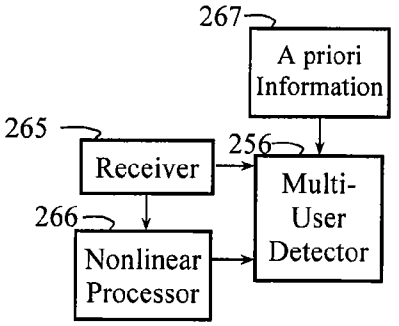

FIG. 28A

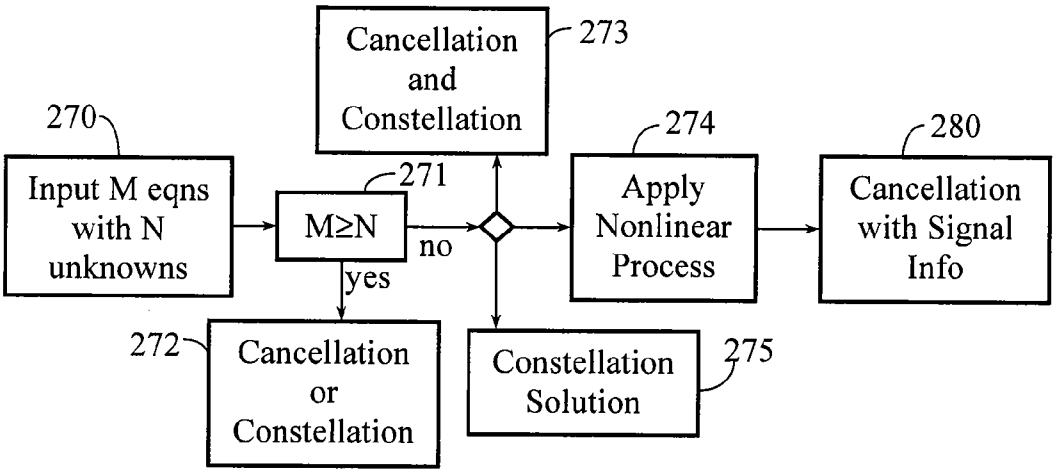

FIG. 28B

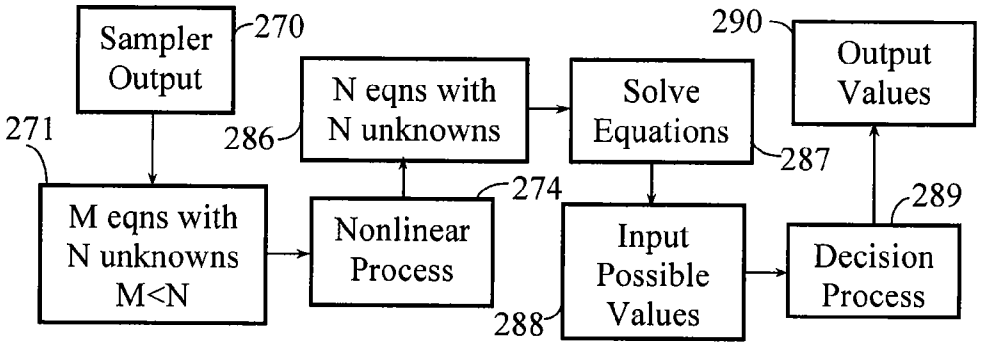

FIG. 29

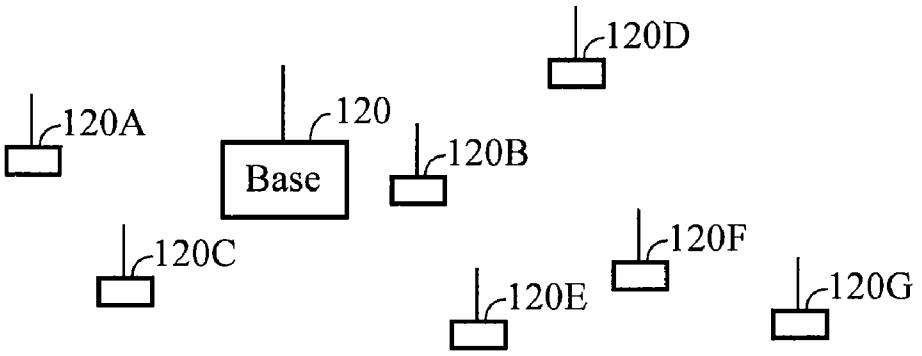

FIG. 30

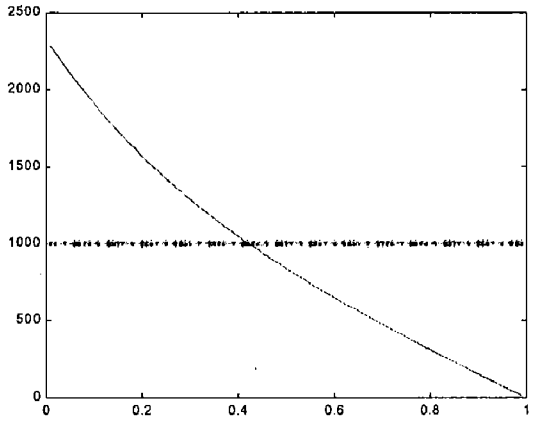

FIG. 31A

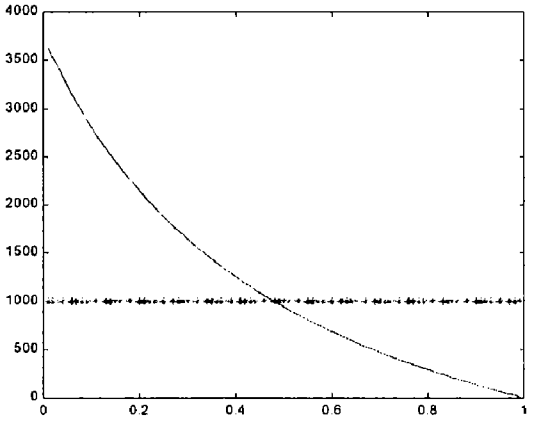

FIG. 31B

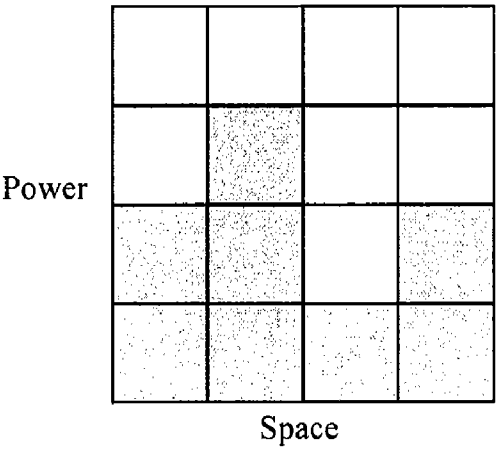

FIG. 32

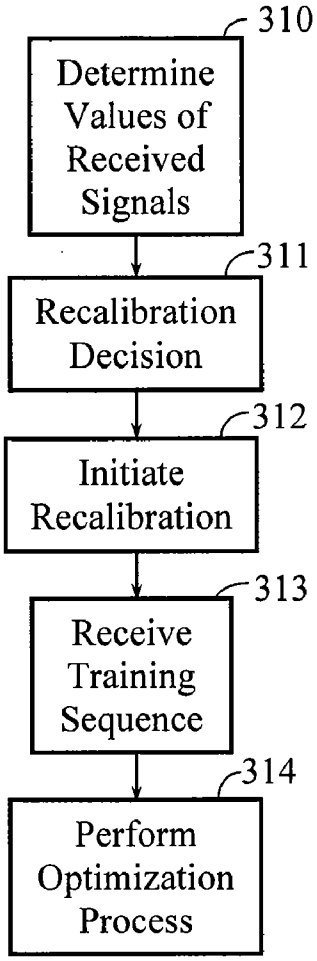

FIG. 33

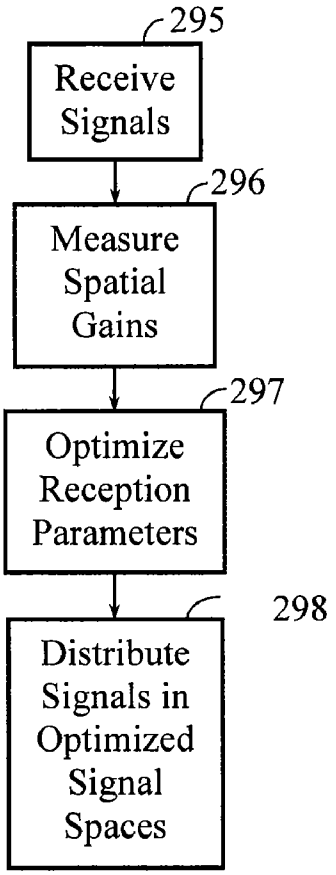

FIG. 35

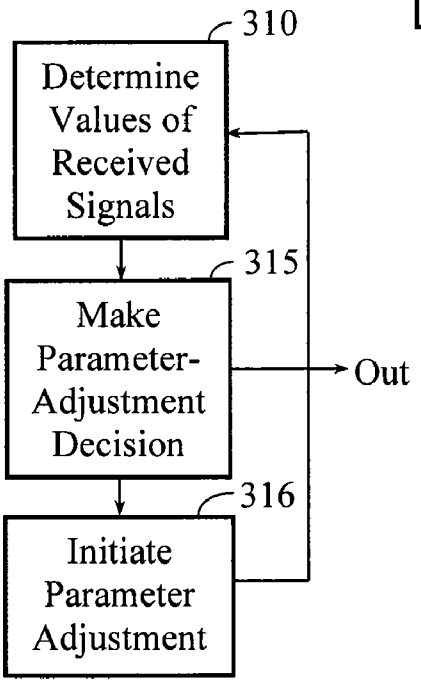

FIG. 34

METHOD AND APPARATUS FOR USING MULTICARRIER INTERFEROMETRY TO ENHANCE OPTICAL FIBER COMMUNICATIONS

CROSS-REFERENCE TO RELATED APPLICATIONS

[0001] This application is a Division of U.S. patent application Ser. No. 09/703,202, filed Oct. 31, 2000, which claims priority to U.S. Provisional Application to Ser. No. 60/163,141, filed Nov. 2, 1999, and is a Continuation-In-Part of U.S. patent application Ser. No. 09/022,950, filed Feb. 12, 1998, now U.S. Pat. No. 5,955,992.

BACKGROUND OF THE INVENTION

[0002] 1. Field of the Invention

[0003] This invention relates generally to wireless communications and specifically to multicarrier spread-spectrum transmission and receivers that employ multi-user detection.

[0004] 2. Description of the Prior Art

[0005] In the Optics Letters article "Broadband Continuous Wave Laser," applicant described a laser design that utilizes a traveling-wave frequency-shifted feedback cavity (FSFC) to circulate light through a gain medium. Light circulating through the FSFC is frequency shifted by an acousto-optic modulator (AOM) upon each pass through the cavity. A unique characteristic of this cavity is that, unlike a Fabry-Perot cavity, it does not selectively attenuate signal frequencies. In the thesis "A New Method for Generating Short Optical Pulses," applicant describes how an optical signal propagating through an FSFC is spread in frequency to generate broadband lasing. The amount of frequency spreading is proportional to the number of times that light circulates through the cavity. In the Applied Physics Letters article "Optical Pulse Generation with a Frequency Shifted Feedback Laser," applicant describes an interference condition in which the broadband output of a laser produces short optical pulses characterized by a superposition of phase-aligned subcarriers with a frequency separation equal to the RF-shift frequency of an AOM.

[0006] In wireless multicarrier spread-spectrum, spreading is performed across orthogonal subcarrier frequencies to produce a transmit signal expressed by

$$x=F^{-1}Sb,$$

where F^{-1} is an inverse DFT, S is a spread-OFDM code matrix, and b is the transmitted symbol vector. The inverse DFT typically employs an over-sampling factor, so its dimension is K×N (where K>N is the number of time-domain samples per OFDM symbol block), whereas the dimension of the spread-OFDM code matrix is N×N.

[0007] The received spread-OFDM signal is

$$r=HF^{-1}Sb,$$

where H represents a channel matrix. Since the use of a cyclic prefix in OFDM changes the Toeplitz-like channel matrix into a circulant matrix, the received signal may be represented by

$$r = F^{-1}\Lambda_H FF^{-1}Sb$$
$$= F^{-1}\Lambda_H Sb$$

where the relationship $H=F^{-1}\Lambda_H F$ is from the definition of a circulant matrix, wherein Λ_H is a diagonal matrix whose diagonal elements correspond to the first column of the circulant channel matrix H. The receiver employs a forward DFT to produce $y=\Lambda_H Sb$.

[0008] In conventional multicarrier spread-spectrum, such as MC-CDMA and Spread-OFDM employing Hadamard-Walsh spreading codes, multipath distortions cause correlations between the spreading codes, resulting in loss of orthogonality in the code space. These correlations are substantially uniform across the entire code space, resulting in each code subspace contributing interference to all of the other code subspaces. Thus, a receiver that employs multi-user detection needs to estimate and cancel interference due to transmissions in all active code subspaces other than the code subspace for a signal of interest.

[0009] There is a need in the art for multicarrier spreading codes that localize code subspace correlations in the presence of multipath. Such codes would greatly simplify multi-user detection, which is a particularly effective technique for interference mitigation in received signals. In the trivial case, S=I, where I is the identity matrix, gives regular OFDM without spreading. In a more general case, it would be advantageous to identify a family of spreading code matrices S that commute with Λ_H. The following relationship establishes the necessary conditions for S to commute with Λ_H:

$$r=F^{-1}\Lambda_H FF^{-1}(\Lambda_C F)b,$$

where $S=\Lambda_C F$, and C is a circulant matrix defined by $C=F^{-1}\Lambda_C F$, where Λ_C is the circulant's diagonal matrix. Thus, the received signal r can be written as

$$r=F^{-1}\Lambda_H\Lambda_C Fb=F^{-1}\Lambda_C\Lambda_H Fb$$

and the despread signal, prior to equalization, is expressed by $y=\Lambda_C^{-1}Fr$.

SUMMARY OF THE INVENTION

[0010] In a particularly simple (but elegant) case, the spreading matrix $S=\Lambda_C F$ may be implemented with $\Lambda_C=I$, such that the spreading matrix is just an N×N DFT matrix. This "Circulant-Identity" case is a simple form of Carrier Interferometry Multiple Access (CIMA). Since OFDM's over-sampled DFT is K×N, the basic CIMA spreading matrix is simply a sinc pulse-shaping filter, which maps each data symbol to a cyclically shifted (orthogonally positioned) superposition of OFDM subcarriers. The actual cyclic CIMA spreading matrix is expressed by $C=F^{-1}\Lambda_C F$. Other versions of CIMA, including other pulse shapes, may be produced by selecting different diagonal matrices Λ_C.

[0011] In one embodiment of the invention, the CIMA protocol involves spreading data symbols across a plurality of carriers to provide a predetermined time-domain profile, such as a sequence of Nyquist pulses.

[0012] In a receiver, CIMA signals can be processed as both low-bandwidth multicarrier signals and a high-bandwidth pulse-stream, which enables different receiver structures to be used.

[0013] In another embodiment, direct-sequence spreading codes may be modulated onto CIMA pulse sequences to produce a type of Direct-Sequence CDMA (DS-CDMA) having a multicarrier signal basis.

[0014] Another embodiment of the invention provides a bandwidth-efficient communication protocol for both waveguide (e.g., optical fiber) and wireless communications. A transmission protocol that is common to optical fiber and wireless systems can facilitate local-access services and other applications that require transmissions to be converted from waveguide to free space and from free space to waveguide.

[0015] Other embodiments and features of the present invention will be apparent from the following detailed description of the preferred embodiment.

BRIEF DESCRIPTION OF THE DRAWINGS

[0016] FIG. **1** is a schematic of a high-capacity optical-fiber network that provides last-mile information delivery to individual users via wireless links.

[0017] FIG. **2** is an illustration of basic components of a transmitter that generates redundantly modulates carrier signals.

[0018] FIG. **3**A is a plot of a plurality of multi-frequency carriers and a superposition of the carriers.

[0019] FIG. **3**B is a plot of a square-wave time-domain pulse.

[0020] FIG. **3**C is a frequency-domain plot of the square-wave pulse shown in FIG. **3**B.

[0021] FIG. **3**D is a time-domain plot of a CIMA pulse.

[0022] FIG. **3**E is a frequency-domain plot of the CIMA pulse shown in FIG. **3**D.

[0023] FIG. **3**F is a flow diagram representing a method of generating CIMA signals.

[0024] FIG. **3**G is a schematic of a CIMA receiver.

[0025] FIG. **3**H is a schematic of a CIMA receiver having a single matched filter.

[0026] FIG. **4**A is a plot of a composite signal resulting from a superposition of carrier signals having an equal frequency spacing.

[0027] FIG. **4**B is a plot of a composite signal resulting from a superposition of carrier signals having carrier frequencies that are unequally spaced.

[0028] FIG. **5**A is a plot of relative amplitudes of a set of multi-frequency carriers that produce a composite signal **130** (shown in FIG. **5**B) having time-domain characteristics of a direct-sequence CDMA signal.

[0029] FIG. **5**B is a time-domain plot of a superposition of the carrier signals shown in FIG. **5**A.

[0030] FIG. **6**A is a diagram of a transmission method performed by a multicarrier transmitter.

[0031] FIG. **6**B is a flow diagram of the steps performed by an alternative embodiment of a multicarrier transmitter.

[0032] FIG. **7** is a diagram of a multicarrier modulator.

[0033] FIG. **8** is a plot of index of refraction n_{index} with respect to signal wavelength λ in an optical fiber.

[0034] FIG. **9** is a plot of relative positions of two waves having different wavelengths at different locations in a dispersive medium.

[0035] FIG. **10** is a diagram that illustrates a process of addressing signals in a dispersive medium by showing the pulse widths and pulse heights of signals having different addresses.

[0036] FIG. **11**A is a schematic of a multicarrier transmission system that provides addressing to transmitted signals.

[0037] FIG. **11**B is a flow diagram of an addressing method for addressing signals in a dispersive medium.

[0038] FIG. **12** shows a general form of a multicarrier receiver.

[0039] FIG. **13** is a functional diagram of a receiver and reception method.

[0040] FIG. **14**A is a diagram of a receiver for an optical system.

[0041] FIG. **14**B is a schematic for an optical receiver.

[0042] FIG. **14**C is a diagram of a receiver having a signal-component adjuster

[0043] FIG. **14**D is a diagram of a multi-channel receiver.

[0044] FIG. **14**E is a schematic of a receiver that performs address separation.

[0045] FIG. **15** is a diagram of a transport-medium interface that couples received optical signals from an optical waveguide to a free-space propagation environment.

[0046] FIG. **16** is a flow diagram for a process of transmitting signals that transition between a waveguide and a wireless channel without requiring a change in protocol.

[0047] FIG. **17**A is a schematic of a waveguide communication system that includes a cancellation line to cancel signals received at a desired receiver.

[0048] FIG. **17**B is a diagram of an alternate embodiment of a waveguide communication system that cancels signals after a desired receiver receives them.

[0049] FIG. **17**C is a flow diagram that describes a process for canceling communication signals in a communication channel.

[0050] FIG. **18** is a process diagram for a diversity-based cancellation system.

[0051] FIG. **19** is a time-domain representation of a plurality of frequency-domain encoded signals.

[0052] FIG. **20**A is a process diagram describing the functions performed by a multiple-diversity communication system.

[0053] FIG. **20**B is an alternative process diagram for a multiple-diversity communication system.

[0054] FIG. **21**A is a graphical representation of two different types of diversity processing.

[0055] FIG. **21**B is a graphical representation of a hybrid form of diversity processing that makes use of at least two forms of diversity processing.

[0056] FIG. **22**A is a schematic of a frequency-diversity interferometry multiplexing system.

[0057] FIG. **22**B is a diagram of a cascaded interferometry system that uses frequency-diversity interferometry multiplexing and spatial interferometry multiplexing.

[0058] FIG. **23** is a diagram of a spread-spectrum interferometer.

[0059] FIG. **24** is a schematic of a redundant-carrier communication system in which a plurality of carriers are received and separated with respect to at least one diversity parameter and then processed and combined with respect to another diversity parameter.

[0060] FIG. **25**A is a process diagram that outlines a method of communication that uses redundantly modulated multicarrier signals.

[0061] FIG. **25**B is a process diagram that describes another method of communication that uses redundantly modulated carrier signals.

[0062] FIG. **25**C is a process diagram that outlines a method of receiving communication signals that include redundantly modulated carrier signals.

[0063] FIG. **26** is a schematic diagram of a communication system that uses redundantly modulated carriers to enhance diversity and uses spatial interferometry multiplexing to increase capacity.

[0064] FIG. **27** is a schematic of a receiver **200** that receives multicarrier signals and achieves benefits of spatial diversity, frequency diversity, and capacity enhancement of spatial interferometry multiplexing.

[0065] FIG. **28**A is a diagram of a receiver **200** that receives a deficient number of receive signals **265** (i.e., equations) and applies a nonlinear process **266** to at least one of the equations to generate one or more additional algebraically unique equations.

[0066] FIG. **28**B is a process diagram that shows steps for separating unknown signals in a plurality of received signals.

[0067] FIG. **29** is a process diagram that describes a method of solving M linear equations having N unknown signals where M<N.

[0068] FIG. **30** is a diagram of a base station and a plurality of transceivers that may use a combination of differential modulation and spatial interferometry multiplexing to achieve enhanced system capacity.

[0069] FIG. **31**A is a plot of SNR for signals separated from a 3-element array for different levels of multi-user interference.

[0070] FIG. **31**B is a plot of SNR for signals separated from a 4-element array for different levels of multi-user interference.

[0071] FIG. **32** is a plot of a two-dimensional signal space comprised of a spatial dimension and a differential power dimension.

[0072] FIG. **33** is a process diagram that shows a method of calibrating weights in a multi-user detector.

[0073] FIG. **34** is a process diagram that shows a looped optimization process.

[0074] FIG. **35** is a process diagram that outlines a method of adjusting reception parameters and assigning transmissions to signal spaces in order to optimize system-operating parameters.

DETAILED DESCRIPTION OF PREFERRED EMBODIMENTS

[0075] The following description is directed toward the implementation of an optical-fiber network having a wireless interface at each node. The implementation of the invention can be directed generally to waveguide and wireless applications.

[0076] FIG. **1** shows the basic components of a high-capacity optical-fiber network that provides last-mile information delivery to individual users via wireless links. A plurality of couplers **150**A, **150**B, **150**C, and **150**D have different locations in a communication channel **99** that supports the propagation of electromagnetic communication signals.

[0077] A coupler (such as couplers **150**A, **150**B, **150**C, and **150**D) couples electromagnetic signals into the communication channel **99** or couples electromagnetic signals out of the communication channel **99**. Couplers can include lenses, antennas, any type of electromagnetic-wave radiator, and any type of electromagnetic-wave receptor. A coupler may be a directional coupler.

[0078] The communication channel **99** is any type of transport medium for electromagnetic waves used for communications. Any kind of electromagnetic wave, such as optical (including infrared) and RF (including microwave), may be used for communication. The channel **99** may be a free-space propagation environment, a guided-wave environment, or both. The channel **99** may cause signal distortion and intersymbol (or intercode) interference.

[0079] The material through which the communication signals propagate, the shape and dimensions of the material, and the mode of transport defines a transport medium. The characteristics of the propagation environment can be represented by electrical characteristics, such as resistance, inductance, and capacitance. Different types of waveguides represent different transport mediums. Different modes of transport, such as guided wave and free space (i.e., wireless), define different transport mediums.

[0080] The communication channel **99** shown in FIG. **1** is an optical fiber, which is a type of waveguide. Other types of waveguides include transmission lines (such as coaxial, microstrip, and twisted pair), parallel plate, channelized free space, and any linear or nonlinear medium that directs propagation of electromagnetic waves by refraction or reflection.

[0081] Each coupler **150**A, **150**B, **150**C, and **150**D in FIG. **1** is coupled to a transmitter **100**A, **100**B, **100**C, and **100**D

and a receiver **200**A, **200**B, **200**C, and **200**D. One or more of the couplers (such as couplers **150**A, **150**B, **150**C, and **150**D) may couple only a transmitter or a receiver to the channel **99**. One or more of the couplers (such as couplers **150**A, **150**B, **150**C, and **150**D) may couple additional parts of the communication channel **99** (such as optical fibers) to the part of the communication channel **99** shown in FIG. **1**.

[**0082**] The receivers **200**B and **200**C are each coupled to a transmitter **100**E and **100**F. The transmitters **100**E and **100**F are each coupled to a coupler **150**E and **150**F. The couplers **150**E and **150**F provide an interface to a wireless channel (not shown) and couple transmission signals provided by the transmitters **100**E and **100**F into the wireless channel (not shown). Each coupler **150**E and **150**F includes an antenna **158**E and **158**F. The couplers **150**E and **150**F receive signals from the wireless channel (not shown) and convey the received signals to a receiver **200**E and **200**F. The receivers **200**E and **200**F are coupled to the transmitters **100**B and **100**C, which couple the received wireless signals into the optical fiber **99**.

[**0083**] The uniqueness of the present invention shown in FIG. **1** is based, in part, on the types of communication signals used. Consequently, the design of the transmitters and receivers are also unique.

[**0084**] FIG. **2** shows a transmitter **100** of the present invention. A multicarrier-signal generator **102** is coupled to an information-signal modulator **104**. The transmitter **100** may include a coupler (not shown) to a communication channel (not shown). The signal generator **102** may include signal-processing systems (not shown), such as, but not limited to weighting systems, transform generators, modulators, filters, and feedback systems. The signal generator may include a polarization controller (not shown).

[**0085**] The signal generator **102** produces a multicarrier signal. A multicarrier signal is defined as a plurality of carrier signals having different orthogonalizing properties (also referred to as orthogonality parameters or diversity parameters), such as time, differential power, location, mode, frequency, polarization, phase space, directivity, spread-spectrum code, or any combination of orthogonalizing properties. An orthogonalizing property (such as polarization) may not be completely orthogonal. For example, polarized signals having less than 90-degrees separation between them have cross-polarization (interference) terms. A multicarrier signal may be defined by any signal property that affects propagation characteristics, such as velocity, reflections, and refraction. Each multicarrier signal may be defined by a different propagation mode.

[**0086**] A multi-frequency signal generator is a type of multicarrier-signal generator. A multi-frequency signal generator is any signal generator that generates electromagnetic signals having frequency-diverse characteristics, such as multiple signal frequencies. Frequency-diverse signals may have diversity according to other diversity parameters, such as time, location, mode, polarization, or diversity parameters resulting from any other orthogonalizing property. The multicarrier signals may have any frequency in the electromagnetic frequency spectrum. However, for optical waveguide applications it is assumed that the signals are optical. In free-space applications, the signals are assumed to be RF (including microwave) or optical (including infrared).

[**0087**] In this case, the signal generator **102** produces a plurality of carrier signals having a plurality of frequencies. The signal generator **102** includes a frequency-diverse transmission source (not shown). A frequency-diverse signal may be a multicarrier, broadband, frequency-hopped, or chirped signal. The transmission source (not shown) may be any type of frequency-diverse electromagnetic signal source, which may include mode-locked lasers, laser arrays, FSFCs, frequency-shifted feedback lasers, or broadband sources. A broadband source (not shown) may include a wavelength demultiplexer (not shown) for separating continuous-wave radiation into carriers having discreet frequencies or discreet frequency bands.

[**0088**] The signal generator **102** may include any type of multi-frequency optical source. Many optical sources disclosed in the prior art are appropriate for the signal generator **102** and are incorporated herein by reference: U.S. Pat. No. 5,881,079 describes a laser cavity having a frequency-routing device comprising controllable frequency-selective pathways to allow multiple lasing frequencies to be supported. U.S. Pat. No. 5,936,752 describes a method of coupling light from a broadband source into a wavelength demultiplexer for creating discreet wavelengths. A broadband source may be provided by U.S. Pat. No. 5,923,683, which discloses a coherent source of white light. U.S. Pat. No. 5,347,525 describes a mode-locked laser for providing multiple signal wavelengths. U.S. Pat. Nos. 5,450,427 and 5,923,686 describe mode-locked lasers used to create short pulses by either active or passive mode locking.

[**0089**] Mode-locking lasers have a modulator in the laser cavity to provide optical losses or gains at a frequency corresponding to the separation frequency between two adjacent longitudinal cavity modes. In active mode-locking lasers, the emitted pulse frequency depends on the excitation frequency of the modulator. A mode-locked laser may be a linear or ring-cavity laser. Active mode-locking systems can produce a large number of locked pulses that simultaneously travel through a ring cavity, and therefore enable the pulse frequency to be much higher than in passive-type devices.

[**0090**] Optical-fiber laser devices have an active electro-optical modulation device in an optical path forming a laser cavity. Harmonic mode locking occurs when the modulation frequency of the device is an integer-valued multiple of the intermode separation frequency. Harmonic mode locking is particularly useful in fiber lasers because it enables shorter pulses to be produced.

[**0091**] FIG. **3**A shows a composite signal **130** resulting from the superposition of a plurality of multi-frequency carriers. The superposition of multi-frequency carriers is described by U.S. Pat. No. 5,955,992, which is hereby incorporated by reference. A composite signal is defined herein as any superposition of a plurality of signals.

[**0092**] The composite signal **130** may be a CIMA signal, which is a signal comprised of carrier signals having predetermined frequency and phase relationships. FIG. **3**B shows a typical square-wave time-domain pulse. FIG. **3**C is a frequency-domain plot of the square-wave pulse shown in FIG. **3**B. FIG. **3**D shows a CIMA pulse in the time domain. A frequency spectrum corresponding to the CIMA pulse is shown in FIG. **3**E. FIG. **3**D and FIG. **3**E show that CIMA signals may be added to either or both the frequency domain and the time domain.

[**0093**] CIMA supports both orthogonal and pseudo-orthogonal waveforms. Basic forms of CIMA can be used to

double capacity in traditional TDMA systems and simultaneously improve system performance in a multipath environment. CIMA allows systems to achieve the benefits of frequency diversity in which they previously could only benefit from path diversity. Similarly, CIMA allows conventional DS-CDMA systems to achieve the performance benefits of MC-CDMA.

[0094] FIG. **3**F shows a method for generating CIMA signals. An information signal $s_k(t)$ (from an input data source **101**) intended for a kth user is split and modulated onto N carriers in a first modulation step **104**A. In a second modulation step **104**B, a plurality of complex weights is applied to the modulated carriers. The complex weights include phase shifts (or delays). Unlike a chip sequence in MC-CDMA (which uses binary values, such as ±1), CIMA signals use values of $e^{in\Delta\Phi_k}$. In an optional third modulation step **104**C additional weights a_{nk} are applied to the carriers. The weights a_{nk} may include windowing weights, channel-compensation values, and/or weight values that facilitate signal separation by cancellation or constellation methods at a receiver (not shown). The modulation steps **104**A, **104**B, and **104**C may be performed in any order and may be combined.

[0095] A CIMA signal corresponding to the superposition on N carriers uniformly spaced in frequency by f_s has a waveform envelope according the equation:

$$E(t) = \left| \frac{\sin(N\pi f_s t)}{\sin(\pi f_s t)} \right|$$

The CIMA envelopes are periodic with a period of $1/f_s$. The mainlobe of the envelope has a width of $2/Nf_s$, and the N−1 sidelobe widths are $2/Nf_s$. Applying a phase shift of $n\Delta\phi_k$ to each nth carrier shifts the CIMA envelope in time by $\Delta t=\Delta\phi_k/2\pi f_s$. Therefore N signals can be positioned orthogonally in time. The phase shifts provide the necessary phase relationships to create the desired timing of the information signal received by at least one receiver (not shown).

[0096] The cross correlation between users is:

$$R_{cc}(\tau) = \frac{1}{2f_s} \frac{\sin(N2\pi f_s \tau/2)}{\sin(2\pi f_s \tau/2)} \cos\left((N-1)2\pi f_s \tau/2\right)$$

where τ is the time shift between envelopes. Zeros occur at k/Nf_s, k=1,2, . . . ,N−1 and $(2k-1)/2(N-1)f_s$, k=1,2, . . . ,N−1. CIMA can support N orthogonal users. If additional users or signals need to be accommodated, CIMA provides N−1 additional positions to place signals.

[0097] Modulated carriers may be combined in a combining step **109**. The combined signals may be up converted in an up-conversion process **205**, which may include mixing with a carrier signal having a frequency f_c. The carrier signals are then coupled into a communication channel **99** by a coupling process **150**.

[0098] A CIMA signal has a number of carrier signals that may each have a bandwidth that is less than the coherence bandwidth of the communication channel. The coherence bandwidth is the bandwidth limit in which correlated fading occurs. The total bandwidth of the CIMA signal preferably exceeds the coherence bandwidth.

[0099] CIMA signals may be spaced in frequency by large amounts to achieve a large system bandwidth relative to the coherence bandwidth. In this case, CIMA signals make use of the frequency diversity parameter to achieve uncorrelated fading. However, any diversity parameter or combination of diversity parameters may be used to achieve uncorrelated fading over the system bandwidth (or even between individual carriers). For example, the system bandwidth of a group of CIMA carriers may be defined by the coherence bandwidth of one or more subchannels, such as spatial subchannels. Carriers that are closely spaced in frequency may have uncorrelated fading if they are transmitted from different locations or have different values of directivity. CIMA carriers transmitted from different locations may have different fades over each spatial subchannel and therefore can benefit from diversity combining at a receiver (not shown).

[0100] A CIMA receiver is shown in FIG. **3**G. CIMA signals are coupled out of a communication channel **99** by a coupler. Information signals are separated from each carrier by a plurality of down converters, such as down converters **205**A, **205***n*, and **205**N. The down converters **205**A, **205***n*, and **205**N may include a filter bank. In this case, the down converters **205**A, **205***n*, and **205**N project the received signals onto the orthonormal basis of the transmitted signals. Down converters (such as the down converters **205**A, **205***n*, and **205**N) may additionally compensate for channel distortion and/or addressing. The down converters **205**A, **205***n*, and **205**N may apply windowing or other filtering processes to the received signals.

[0101] Signals output from the down converters **205**A, **205***n*, and **205**N may be sampled by a plurality of samplers **214**A, **214***n*, and **214**N before being combined in a combiner **109**. A decision device **255** detects the combined signals. The decision device **255** may be part of the combiner **109**. The decision device **255** may perform multi-user detection or multi-channel detection and may perform any combination of cancellation and constellation processes to determine the value(s) of received signals.

[0102] FIG. **3**H shows a CIMA receiver having a single matched filter **134**. The matched filter **134** may optionally provide time limiting (gating) to the received signals before being processed by a decision device **255**.

[0103] FIG. **4**A and FIG. **4**B show composite signals resulting from superpositions of equally spaced carrier frequencies and unequally spaced carrier frequencies, respectively. Equally spaced carrier frequencies produce a composite signal that has periodic pulses. Unequally spaced-in-frequency carriers produce a non-periodic composite signal that has reduced sidelobe levels. In WDM, unequal spacing of channels (with respect to wavelength) is desirable because it reduces four-wave mixing.

[0104] Unequally spaced carrier signals refer to any type of sparse or ultra-sparse spacing, such as referred to in array processing, but applied to frequency or wavelength spacing of the carriers. Unequal spacing includes random spacing, non-redundant spacing, or any type of spacing determined by a nonredundant mathematical relation, such as prime numbers, 2^n relationships, or Fibonocci series.

[0105] The multicarrier-signal generator **102** or the modulator **104** may provide a frequency-versus-amplitude windowing function to the carrier signals. Windowing functions include spatially variant apodization, and any other methods of reducing sidelobes, such as described in U.S. Pat. No. 5,955,992.

[0106] The modulator **104** may modulate the carrier signals with an information signal. The modulator **104** may use the carrier signals to modulate the information signal. The modulator **104** may use any type of modulation scheme, such as AM, FM, ASK, FSK, PSK, PAM, TOM, Pulse Position Modulation, and any type of differential modulation.

[0107] Information signals are communication signals that are unknown (or have at least one unknown characteristic) at a receiver prior to transmission. The information signal may be analog or digital. The information signal may be a baseband information signal, an information signal modulated with an intermediate frequency, or a coded information signal that has been encoded with any combination of encryption, error-correction, and spread-spectrum codes.

[0108] The modulator **104** may provide weights to each of the carriers according to a predetermined code. The coded weights may be applied to the carriers in order to generate a predetermined time-domain profile, such as a direct-sequence signal. A preferred embodiment of the invention includes a process of applying complex weights to a multicarrier signal in order to create a predetermined time-domain signal. A predetermined time-domain signal (or profile) is defined herein as a specific shape of at least one signal parameter, such as amplitude, frequency, polarization, and phase in the time domain. The time-domain shape may be characterized by any signaling protocol, such as TDMA and CDMA.

[0109] Although carriers may be modulated with respect to codes, or information signals may be modulated onto the carriers within multiple time intervals or having different time offsets, the carriers are redundantly modulated with at least one information signal. In this specification, redundantly modulated multicarrier signals describe any of a set of signals wherein at least one information signal is modulated onto a plurality of carrier signals having different values of at least one diversity parameter. A modulator may simultaneously modulate the carriers with the information signal, or it may modulate each carrier independently. The carrier signals may be modulated at different time intervals. The carriers may be modulated with an encoded information signal. The carriers may be modulated non-redundantly or quasi-redundantly with spreading, error-correction, or encryption codes in addition to being redundantly modulated with the information signal(s).

[0110] FIG. **5**A shows the relative amplitudes of a set of multi-frequency carriers that produce a composite signal **130** (shown in FIG. **5**B) having time-domain characteristics of a direct-sequence CDMA signal. If the carriers are uniformly spaced in frequency, then the time-domain signal is periodic. The number of direct-sequence chips in the time-domain signal may be proportional to the number of carrier signals. The bandwidth of the time-domain sequence is related to the bandwidth of the carriers, which is related to the number and spacing of the carriers.

[0111] FIG. **6**A shows a multicarrier transmitter and transmission method of the present invention. An nth information signal $s_n(t)$, such as for an nth user, is applied to an nth code c_n having N chips c_{kn} (k=0 to N−1). The information signal $s_n(t)$ may modulate the code or it may be modulated by the code c_n.

[0112] A code generator **114** provides the N chips c_{kn} to a serial-to-parallel converter **107** that arranges the chips c_{kn} to parallel modulate each of a plurality of carrier signals generated by a carrier-signal generator **102**. If the carriers are multi-frequency carriers, the carrier-signal generator **102** may be represented by the operation or implementation of a digital method for generating multi-frequency carriers, such as an inverse Discreet Fourier Transform or an inverse Fast Fourier Transform. Each chip c_{kn} may be applied to a frequency bin of a transform process. The chips c_{kn} may have binary, real, or complex values. The modulated carriers are optionally coupled to an output processor **112**, which processes the carriers prior to coupling them into a communication channel (not shown).

[0113] The code generator **114** can be used as an information-signal encoder or a carrier encoder. An information signal may be used to modulate at least one code sequence. The code generator **114** may be a multi-stage code generator. Code generators may include one or more N-point transforms. N-point transforms include Discrete Fourier Transforms (DFT), Fast Fourier Transforms (FFT), Walsh Transforms (WT), Hilbert Transforms (HT), Randomizer Transforms (RT), Permutator Transforms (PT), Inverse DFTs, Inverse FFTs, Inverse WTs, Inverse HTs, Inverse RTs, Inverse PTs, and any other reversible transform.

[0114] The output processor **112** may combine the carriers and/or provide additional processing, such as filtering, interleaving, up converting, down converting, coding, weighting, amplifying, and mixing. A multicarrier signal may appear as a continuous broadband signal (in the frequency domain) if the carriers are modulated by a signal that has a large bandwidth with respect to carrier-frequency separation.

[0115] A direct-sequence time-domain signal is produced by an appropriate selection of chip values c_{kn}. Therefore, the generation of the periodic time-domain chip sequence does not require any time-domain processing. The only time-domain processing involves the modulation of the time-dependent information signals $s_n(t)$ onto the carriers. This multicarrier method of generating CDMA signals enables ultra-wideband CDMA to be deployed without the high-speed processing requirements of conventional direct-sequence chip generation.

[0116] FIG. **6**B illustrates an alternative embodiment of a transmitter **100** of the invention. Some of the components shown in FIG. **6**B may be separate from the signal generator **102** and modulator **104** shown in FIG. **2**, or they may be integrated into those components **102** and **104**. Therefore, the simplicity of the transmitter **100** illustrated in FIG. **2** is meant to convey that there is a broad range of transmitter designs that can be used to generate redundantly modulated multicarrier signals. Furthermore, at least some of the basic principles behind the transmitter's **100** operation are applicable to transmitters that produce different types of electromagnetic signals and transmitters that are coupled to different kinds of communication channels.

[0117] An information-signal source **101** provides information signals $s_n(t)$ to an encoder **108**, which may digitize

and code the signals $s_n(t)$ to create bits of information $s_n(k)$. Signal coding may include spread-spectrum, error-correction, or encryption coding. Information bits $s_n(k)$ are represented as one form of the information signal $s_n(t)$. The bits $s_n(k)$ are provided to a modulator **104** which produces a plurality of modulated symbols.

[0118] The modulated symbols are coupled to a predistortion device **111**, which adjusts signal parameters (such as power, gain-profile, and phase) in order to compensate for distortion resulting from network components (such as the channel, amplifiers, and receivers). The predistortion device **111** is an optional part of the transmitter **100**. The modulated symbols may be processed in a carrier-signal generator **102**, which may be a digital signal processor. The signal generator **102** performs an inverse Fourier Transform, and may perform other digital processing methods, such as filtering and pulse shaping. A low-pass filter **113** may filter the output of the signal generator **102**. The modulated symbols may be mixed with a carrier signal from a local oscillator **203**. The local oscillator **203** may be used to either up convert or down convert modulated carrier signals that are coupled into a communication channel by a coupler **150**.

[0119] FIG. **7** shows a diagram of a multicarrier modulator **104** for use in an optical communication system. A frequency-diverse optical source (not shown) provides a frequency-diverse signal to a wavelength division multiplexer **103** that separates the frequency-diverse signal into a plurality of frequency components representing individual carrier signals. Each carrier is coupled through one of a plurality of carrier modulators **105**A to **105**E. Modulation signals are provided by a modulation signal generator **107** coupled to each of the carrier modulators **105**A to **105**E. The modulated carriers may be combined by a combiner **109** before being coupled into a communication channel (not shown).

[0120] A combiner, such as the combiner **109** is any device or process that has an input of a plurality of signals and an output representing a superposition of the signals. A combiner may be a physical device, such as a wavelength multiplexer, splitter, voltage divider, a summer, or a difference amplifier. A combiner may be a combining process performed by a computer processor. A combiner may provide phase shifts to one or more input signals, filtering, inversion, interleaving, de-interleaving, or amplitude adjustment prior to combining the input signals.

[0121] Any of the modulators **104** used in the invention may include a selective modulation unit, such as the modulator disclosed in U.S. Pat. No. 5,949,925 that operates on each carrier signal individually.

[0122] U.S. Pat. No. 5,796,765 (which is incorporated herein by reference) describes a mode-locked laser used to control an optical switch. The laser has an intracavity modulator that is repetitively modulated at an integer multiple of the cavity round-trip time. Output pulses are in bit positions that correspond to the signal input to the modulator. This method could be used to switch the transmission of a CIMA signal output to an optical fiber. This laser could also be used to generate the CIMA signals, and in the process control the timing of the CIMA signals. U.S. Pat. No. 5,812,302 discloses a high-speed frequency-modulation signal source.

[0123] Pulsed signals may be digital or analog modulated. The modulator **104** may be a Mach-Zender modulator made of lithium niobate ($LiNbO_3$). Lithium niobate external modulators are typically used to provide amplitude-shift key or phase-shift key modulation. Frequency-shift keying may be accomplished by modulating the drive current of a transmitter diode laser. The modulation may include multi-level keying formats.

[0124] Information modulated onto carriers may be coded, such as according to a multiple-access, error-correction, or encryption code. Interleaving may be employed to reduce distortion effects caused by the channel **99**. The carriers may be phase-shift (or delay) coded or otherwise coded with a multiple-access or encryption code. Modulators may provide a modulation signal to each of the carriers, or they may modulate a composite transmit signal formed from the superposition of the carriers. The modulator **104** may include a clock having a frequency that determines the modulation frequency imparted to the data.

[0125] The modulator **104** may include a delay or phase-shift device that delays or phase shifts one or more of the carriers before insertion into the fiber. The delay may be applied by a timing switch or delay device that adds a delay or phase-shift to each of the carriers separately or combined. The delay device may consist of one or more delay paths that provides a variable delay to the carriers, such as a delay that depends on carrier wavelength or polarization. The modulator **104** may provide a windowing function to lower sidelobes. Windowing functions include spatially variant apodization and any other methods that reduce sidelobes, such as Hamming, Hanning, Gaussian, triangular (Bartlett), Kaiser, Chebyshev and raised-cosine filtering.

[0126] A modulation scheme, such as pulse amplitude modulation may be performed on the individual carriers or on the composite signal **130** shown in FIG. **3**A. The modulation width may be large relative to the pulse width. For example, the modulation width may span a plurality of time intervals **133**, **135**, and **137**. The modulation width may span a short time interval such as interval **135**. In either case, the composite signal **130** received by a receiver (not shown) will be substantially identical. Therefore, a very large modulation width (i.e., a very slow modulation frequency) can be used to generate high-bandwidth modulated signals.

[0127] FIG. **3**A shows a plurality of phase spaces **123**, **125**, **127**, and **129**. Phase space (which is described in PCT Appl. No. WO99/41871) is the phase relationship between different carriers. The zero-phase relationship **125** corresponds to a constructive interference signal (such as a pulse) positioned at a particular instant in time. This enables the composite signal **130** to be detectable by a receiver (not shown) that does not adjust the phase of the individual carrier signals. Non zero-phase relationships, such as phase spaces **123**, **127**, and **129**, correspond to a substantially zero composite signal **130**. Windowing at either or both the transmitter **100** and the receiver **200** may reduce the sidelobes of the composite signal **130**.

[0128] Although the composite signal **130** may have substantially zero amplitude in time intervals where there is a non zero-phase relationship between the carriers, the carriers still exist and therefore, the information signal represented by the constructive interference that occurs at zero phase exists in non zero phase. Recovery of the information signal from a non zero-phase sampling of the carriers (such as may be required due to chromatic dispersion in the propagation

channel) may be achieved by phase shifting (or delaying) the carrier signals in order to construct a zero-phase relationship.

[0129] In a wireless channel, the redundantly modulated multicarrier protocols provide substantial improvements in performance over all other protocols. CIMA provides superior bandwidth efficiency compared to any other protocol, and it allows a seamless conversion from orthogonal coding to quasi-orthogonal coding. CIMA provides substantial improvements to interference rejection and signal degradation due to multipath. Frequency diversity in CIMA reduces transmission-power and power-control requirements. CIMA enables simplified transmitter and receiver designs, and it enables the implementation of ultra-wideband CDMA by using slow parallel processing. The implementation of redundantly modulated multicarrier protocols in antenna arrays introduces new array-processing capabilities. Frequency diversity in redundantly modulated protocols introduces new types of spatial processing that do not require antenna arrays.

[0130] The CIMA protocol also enables a seamless transition from orthogonal operating conditions to quasi-orthogonal operating conditions. A detailed discussion of the operation of a basic CIMA system is described in "Introduction of Carrier Interference to Spread Spectrum Multiple Access," Nassar et. al. (Proceedings of the 1999 IEEE Emerging Technologies Symposium on Wireless Communications and Systems, Apr. 12-13, 1999), which is hereby incorporated by reference.

[0131] Time-division multiple access may be achieved by assigning one or more time intervals to each transmitter. A transmission system may include at least two transmitters generating modulated multicarrier signals offset in time. Another type of multiple access may be achieved by assigning one or more time-dependent phase spaces to each transmitter. The phase spaces may be sampled in multi-user detection processes or in other processes that can enhance the signal quality of received signals. Multiple access may be achieved by generating and processing spread-spectrum signals (such as CDMA) produced by setting or adjusting (such as weighting or hopping) characteristics of multicarrier signals. In another form of multiple access, coded multicarrier signals are processed in the frequency domain using a multi-user type of processing, such as cancellation or constellation methods for separating interfering information signals.

[0132] One aspect of the present invention includes the use of a redundantly modulated multicarrier protocol in waveguides. An optical-fiber communication system that uses the multicarrier protocol is illustrated in FIG. **1**. Single-mode fibers are typically used in optical communication systems because of their high-bandwidth capabilities. Optical fibers described herein may be any type of optical-fiber waveguide including (but not limited to) single mode, multimode, step-index, and quadratic-index fibers.

[0133] An optical-fiber path may include at least one amplifier to compensate for fiber attenuation and component loss. Either equalization or pre-emphasis may be used in the optical system to compensate for non-uniform amplifier gain. U.S. Pat. No. 5,847,862 (which is incorporated by reference) describes a method of shaping amplifier outputs to offset depletion of high-frequency channels.

[0134] In an optical fiber (or any type of waveguide), differences in carrier velocity may result from dispersion. Dispersion includes intramodal (group velocity) dispersion, such as material and waveguide dispersion, and intermodal dispersion, such as modal dispersion. In the preferred embodiments, it is assumed that the optical fiber has a dispersion that increases with increasing signal wavelength.

[0135] FIG. **8** shows a variation in index of refraction n_{index} with respect to signal wavelength λ in an optical fiber. The variation of n_{index} with respect to λ results in dispersion of broadband signals propagating in the fiber. A dispersion profile is a dispersion-versus-wavelength (or frequency) relationship of a dispersive medium.

[0136] FIG. **9** shows the relative position of two waves of a plurality of waves coupled into a dispersive waveguide **99**. Two waves **71**A and **81**A are coupled into the waveguide with a time offset. Wave **81**A has a longer wavelength than wave **71**A and therefore travels faster through the waveguide **99**. The waves **71**A and **81**A (as well as other waves in the group) are substantially out of phase, resulting in a composite signal **130**A having a nearly zero amplitude. As the waves **71**A and **81**A travel through the waveguide, the longer-wavelength wave **81**A travels faster than wave **71**A. At another location in the waveguide **99**, waves **71**B and **81**B are closer with respect to time than waves **71**A and **81**A. The waves **71**B and **81**B are still substantially out of phase, resulting in a nearly undetectable composite signal **130**B. However, the composite signal **130**B has a shorter′ time duration than signal **130**A.

[0137] At another location in the waveguide **99**, dispersion causes a group of different-frequency waves **71**C and **81**C to be in phase. The composite signal **130**C resulting from the superposition of the waves **71**C and **81**C includes a constructive-interference pulse that is easily detectable. The duration of the composite signal **130**C is shorter than the duration of the other composite signals **130**B and **130**A. The duration of the detectable portion of signal **130**C may be substantially shorter than the actual duration of the signal **130**C.

[0138] Dispersion will cause the waves **71**C and **81**C to move out of phase at other locations past the location where the waves **71**C and **81**C combine in phase. Matching dispersion profiles and phase relationships enables signals to be enhanced by dispersion. As matched signal components travel through a waveguide, the duration of composite signals is reduced and the detectability of the composite signals is increased. The duration and detectability of a composite signal may be optimized at one or more locations along a waveguide.

[0139] A phase relationship applied to a multicarrier (or frequency-diverse) signal matches a dispersion profile of a waveguide for a specific distance if the carriers have a predetermined phase relationship after traveling that distance through the waveguide. The predetermined phase relationship at the specific distance along the waveguide may be a zero-phase or a non zero-phase relationship.

[0140] A virtual address is the phase relationship of a transmitted multicarrier (or frequency-diverse) signal required to produce a predetermined phase relationship at a predetermined receiver along a waveguide. A virtual address may be represented as one or more phase spaces, such as the

phase spaces **123**, **125**, **127**, and **129** shown in FIG. **3**A. A transmitter applies the virtual address to the multicarrier signal. The characteristics of the address depend on the waveguide dispersion, the length of the waveguide between the transmitter and the receiver(s), and the characteristics of the predetermined phase relationship of the signal(s) required at the receiver(s).

[**0141**] Virtual switching includes a process of addressing a transmitted signal such that it has a predetermined phase relationship upon reception by at least one receiver. The addressing is a type of dispersion compensation. The phase relationship of the addressed signals is selected such that as the signals propagate through the waveguide and distort due to dispersion, the phase relationships mutate to create a predetermined phase relationship at a specific receiver location along the waveguide. At other locations along the waveguide, the signals may have phase relationships that cause them to be disregarded or undetected by receivers at those locations.

[**0142**] FIG. **10** illustrates the process of addressing. A transmitter **100** couples addressed multicarrier transmission signals into a waveguide **99** that has at least two nodes **161**A and **161**B. The nodes **161**A and **161**B, which are at different locations along the waveguide **99**, may include couplers (not shown) to receivers (not shown) or other communication channels (not shown). The transmitter **100** includes a modulator **104**, a multicarrier-signal generator **102**, and a coupler **150** that couples modulated multicarrier signals to the waveguide **99**.

[**0143**] The transmitter **100** may include an address applicator (not shown) or the modulator **104** may perform address application to the transmission signals. The address applicator (not shown) selects at least one relative phase relationship between a plurality of carrier signals having different values of at least one orthogonalizing property (such as frequency). The relative phase relationship corresponds to at least one address. The address applicator (not shown) produces at least one packet of carriers having the relative phase relationship(s). Transmission signals having at least one virtual address arrive at one or more predetermined nodes (such as nodes **161**A and **161**B) with at least one predetermined phase relationship.

[**0144**] The address applicator (not shown) may use a relative phase selector (not shown) to match a virtual address to a transmission signal based on its intended destination(s). The address applicator (not shown) may include a packet generator (not shown) to produce a PAM section of a multicarrier signal having a desired phase relationship.

[**0145**] In the addressing process shown in FIG. **10**, the transmission signals addressed to the first node **161**A arrive at the first node **161**A with a predetermined phase relationship that facilitates reception of the transmission signals. For example, the transmission signals may have a zero-phase relationship at node **161**A. However, at node **161**B, the signals addressed to node **161**A are undetectable (e.g., they have non-zero phase if there is a zero phase space detector at node **161**B) or have a phase relationship that causes them to be discarded. Similarly, transmission signals addressed to the second node **161**B arrive at that node **161**B with a predetermined phase relationship and are undetected or removed at node **161**A.

[**0146**] FIG. **11**A shows a multicarrier transmission system that provides addressing to transmitted signals. An information signal Sk(t) (from an input data source **101**) intended for a kth user is split and modulated onto N carriers in a first modulation step **104**A. In a second modulation step **104**B, a plurality of complex weights is applied to the modulated carriers. The complex weights include phase shifts (or delays). In an addressing step **104**C additional weights a_{nk} are applied to the carriers to compensate for carrier-dependent distortion effects caused by the channel **99** between the transmission system and an intended receiver **200**.

[**0147**] In this case the channel provides a distortion to the nth carrier by an amount of $e^{i\Phi_n d_k}$. Φ_n is a linear (with respect to distance) delay factor associated with a carrier frequency in the channel **99** and d_k is the distance that the wave travels between the transmitter and the receiver **200**. The factor Φ_n may depend on nonlinear channel effects, such as dispersion.

[**0148**] The weights ank have values of $e^{-i\Phi_n d_k}$ to compensate for the channel distortion affecting each carrier. Therefore the weights a_{nk} provide a type of addressing to the transmitted signals. The weights a_{nk} may include windowing weights and/or weight values that facilitate signal separation by the receiver **200**. The modulation steps **104**A, **104**B, and **104**C may be performed in any order and may be combined. The transmitted signals are coupled out of the channel **99** by a receiver coupler **151** coupled to the receiver **200**.

[**0149**] FIG. **11**B shows steps of an addressing method. Multicarrier signals are produced in a multicarrier-signal generation step **180**. The multicarrier signals may be information modulated during this step **180**. In the multicarrier-signal generation step **180**, the multicarrier signals are preferably provided with a carrier-phase relationship that matches the dispersion profile of the channel **99** for at least one desired address. The process of providing the carrier-phase relationship may include providing at least one initial carrier-phase relationship between the carriers and selecting the values of at least one carrier's orthogonalizing properties (such as frequency and/or polarization) that affect dispersion of the signals in the channel **99**.

[**0150**] The multicarrier signals are assigned at least one address in a phase-space addressing step **181**. Adjustments to the carrier phases and/or the carrier frequencies may be performed in this step **181**. The process of addressing is performed by selecting at least one set of relative phases of the multicarrier signals. The selection process may be performed by individually modulating a portion of each carrier or modulating a portion of the composite signal **130**. The modulation may be any type of modulation including PAM, and it may involve modulating the carriers or composite signal **130** with at least one information signal. The phase-space addressing step **181** may adjust or control the carrier phases and/or the orthogonalizing properties. A coupling step **182** couples the addressed signals into the channel **99**.

[**0151**] Adjusting multicarrier signal frequencies may be performed at the transmitter **100** in order to provide a phase relationship that matches a dispersion profile of the waveguide **99**. This is done in order to provide a specific phase relationship between the carriers at the transmitter **100** (such as to facilitate PAM of the superposition signal). The signal frequencies may also be adjusted in order to adjust the phase relationship of signals received by one or more receivers (not shown) along the waveguide **99**. If the mul-

ticarrier signals are non-uniformly spaced, then dispersion shifting of the carriers is unlikely to generate multiple primary-interference zones associated with a single address.

[0152] Receivers described in this specification are considered to be any system that processes transmitted signals coupled out of (received from) a communication channel. The processing achieves recovery of one or more information signals modulated on the transmitted signals. The receiver **200** may include a coupler to couple signals from the communication channel **99**. The receiver **200** may provide decoding of encrypted, error-coded, or spread-spectrum coded signals. Signal processing may involve use of a phase-lock loop to track phases of received signals in order to compensate for phase variations (such as jitter).

[0153] The receiver **200** may use discreet components or digital signal processing methods in a CPU. The receiver **200** may include one or more discreet components or methods including envelope detectors, filters, decoders, level controllers, amplifiers, phase-lock loops, de-interleavers, demodulators, mixers, windows (such as frequency-domain or time-domain windows), analog-to-digital converters, circulators, samplers, phase shifters, weight-and-sum processors, delay lines, pulse-stretching processors, electrical signal generators, signal storage processors, cancellers, and frequency converters. The receiver **200** may change the frequency of received signals before, during, or after processing to recover the information signal(s). The receiver **200** may convert received signals into electrical signals and the electrical signals may be processed in a CPU using analog or digital signal processing.

[0154] A time-domain receiver receives and processes transmitted time-domain signals to recover one or more information signals modulated on the transmitted signals. The time-domain receiver may receive a time-domain signal and apply a signal-processing method to facilitate reception of a pulse. Many types of signal processing may be used to stretch a received pulse. RF pulse-stretching methods are described in U.S. Pat. No. 5,805,317, which is hereby incorporated by reference. Time-domain receivers may include envelope detectors, peak detectors, and the like. Time-domain receivers may also include any type of decimation-in-frequency system, frequency analyzer, or frequency processor to assist in detection of the received time-domain signals.

[0155] FIG. **12** shows a general form of a receiver **200** of the invention. FIG. **12** illustrates the function and structure of a signal processor that extracts information signals from one or more received multicarrier signals. Some of the processes performed by the receiver **200** may be performed by software in a computer or digital signal-processor chip.

[0156] A coupler **150** couples received signals from a communication channel **99** into a carrier isolator **201**, such as a band-pass filter. A band-pass filter may include one or more filters of a filter bank (not shown). The isolated received signals may be down converted by mixing with a local oscillator **203** signal. Down conversion of the received signals is an optional process. The received signals may be sampled by a sampler **214** to produce a plurality of received information bits (or otherwise processed signals) that are processed in a processor **212**. Processed signals are passed on to a demodulator/decoder **206** that outputs a recovered information signal $s_n(t)$.

[0157] The carrier isolator **201** separates or isolates at least one multicarrier signal. The carrier isolator **201** may provide filtering, diffraction, or coding (or a combination of methods) to achieve separation of multicarrier signals. The carrier isolator **201** may include a filter bank (not shown), which is defined as any device that separates multicarrier signals with respect to one or more orthogonality parameters that distinguish the multicarrier signals.

[0158] One type of filter bank is a frequency-filter bank. A frequency-filter bank is any device or method that performs separation-by-frequency of a frequency-diverse signal. A filter bank may be an array of filters or a signal-processing technique (such as a Fourier transform) that acts on a time-domain signal to separate it into spectral components. A filter bank may include a set of processors that spectrally decompose a time-domain signal into a set of frequency bins. A frequency bin represents the frequency band of each filter in a filter bank. The filter bank may provide weights to the bins.

[0159] A Fourier transform, as used herein is defined as any of the direct or inverse Fourier transform methods including Fourier transforms, Fourier series, discreet-time Fourier transforms, discreet Fourier transforms, and polynomial transforms. Fourier transforms may be implemented using any number of computational techniques, such as fast Fourier transforms, and they may be supported using additional mathematical relationships such as Laplace transforms.

[0160] A wavelength demultiplexer is a type of carrier isolator **201**. Many different types of filters may be used in a carrier isolator **201**. To separate individual carriers, the filters preferably have sharp roll-off characteristics to minimize cross talk between channels. The carrier isolator **201** may include wide-band filters for separating a plurality of channels into groups of channels for FDM. The carrier isolator **201** may also include multiple stages of wavelength demultiplexers.

[0161] A preferred embodiment of the carrier isolator **201** includes a monolithic optical-waveguide filter. Bandpass filters may be interferometric (such as thin-film interference filters), resonant cavities, or acousto-optic filters. A filter may comprise a Bragg grating in a Mach-Zehnder interferometer. Filters may be switchable or tunable. Another method of carrier isolation may include filtering after converting received electromagnetic signals to electrical signals. A star coupler with tunable filters on the receiving ends may also be used as a carrier isolator **201** for wavelength demultiplexing signals.

[0162] Another type of carrier isolator **201** is a decoder, which may be implemented in the demodulator/decoder **206** or in other decoders described in the specification. A decoder may be used to describe either or both an information decoder and a carrier decoder. The decoder may be a multi-stage or parallel decoder and may include at least one correlator and/or at least one matched filter.

[0163] An information decoder decodes an encoded information signal. The decoder may provide encryption, error-correction, or spread-spectrum decoding (or any combination of decoding) to decode an encoded information signal.

[0164] A carrier decoder provides decoding of an encoded multicarrier signal in which each carrier signal may be AM,

FM, ASK, PSK, frequency-hop, time-hop, delay, time-offset, or phase-space encoded. Encoding may include differential modulation.

[0165] A spread-spectrum decoder can be used as an information decoder or carrier decoder. The decoder may decode an information or multicarrier signal according to a code sequence generated by a code generator. The decoder may include a multi-stage decoder. Decoders may generate one or more N-point transforms. N-point transforms include DFTs, FFTs, WTs, HTs, RTs, PTs, Inverse DFTs, Inverse FFTs, Inverse WTs, Inverse HTs, Inverse RTs, Inverse PTs, and any other reversible transform.

[0166] The sampler **214** may sample received signals with respect to one or more orthogonality parameters. A time-domain sampler collects samples during multiple time intervals. A phase-domain sampler takes at least one sample in at least one time interval, then adjusts the relative phases of the sampled signals to reconstruct time-domain signals occurring in other time intervals. A space-domain sampler receives samples from a plurality of spatially separated locations or directions of arrival. A polarization sampler takes samples from a plurality of samplers having different polarization sensitivities. A frequency-domain sampler includes a filter bank for separating received signals into a plurality of frequency components. The information signals are removed from the carriers and the complex-valued amplitude of the information signals is preserved. Frequency-domain processing may include the removal of redundant transform values. A sampler (such as sampler **214**) may be used as a carrier isolator.

[0167] The processor **212** may include one or more discreet components or signal-processing methods including envelope detectors, filters, decoders, coders, level controllers, amplifiers, phase-lock loops, de-interleavers, demodulators, mixers, windows (such as frequency-domain and time-domain windows), analog-to-digital converters, digital-to-analog converters, circulators, samplers, phase shifters, weight-and-sum processors, delay lines, pulse-stretching processors, signal generators, local oscillators, signal-storage processors, cancellers, and frequency converters.

[0168] Components of the receiver **200** shown in FIG. **12** may be arranged in different orders. In some cases, some of the components can be removed. For example, in its simplest form, the receiver **200** may include the coupler **150** coupled to the processor **212** wherein the processor **212** includes an envelope detector that outputs the information signals $s_n(t)$.

[0169] FIG. **13** shows a receiver **200** and reception method of the invention. A coupler **150** couples received multicarrier signals from a communication channel **99** to a carrier isolator **201**. The carrier isolator **201** separates a plurality of the multicarrier signals into separate carrier-signal components. The carrier-signal components are coupled into a decoder **207** that decodes either or both carrier and information signals. The decoded signals are coupled to a detector **204**, which may include a parallel-to-serial signal converter **255**. The signal converter **255** may include at least one weight-and-sum processor, a combiner, a canceller, and/or a constellation processor. The signal converter **255** outputs one or more recovered information signals $s_n(t)$.

[0170] The detector **204** may include a multi-user detector (not shown). A multi-user detector (not shown) receives one or more signals from a plurality of user channels and processes those signals to estimate their values. The detector **204** can make either hard decisions or soft decisions. The detector **204** may perform diversity combining, which can consist of co-phasing, selective combining, maximal-ratio combining, equal-gain combining, maximal-selection combining, or any other type of diversity combining.

[0171] Any of the signal-processing operations associated with the processor **212** may be incorporated into the carrier isolator **201**, the decoder **207**, the detector **204**, or the parallel-to-serial signal converter **255**. The decoder **207**, detector **204**, and parallel-to-serial signal converter **255** may comprise one of a plurality of sets of receivers coupled to the carrier isolator **201**. The carrier isolator **201** may separate received multicarrier signals into a plurality of groups. Each of the carrier groups may be coupled to a different receiver, such as receiver **200**.

[0172] There are a large variety of receivers that can be used in a redundantly modulated multicarrier waveguide-communication system including the following:

[0173] 1. An ordinary time-domain receiver that receives carriers having a zero-phase relationship.

[0174] 2. A receiver coupled to a transmitter that retransmits the received signals into the same channel medium.

[0175] 3. A transport-medium interface: (such as an optical-to-RF converter) for retransmitting received signals into a different channel.

[0176] 4. An optical-to-electrical converter (which may include a digital signal processor for processing electrical signals) and/or detector.

[0177] 5. A multi-user detector or multi-channel detector.

[0178] 6. An address adjuster that uses phase-domain sampling to produce a predefined phase relationship between multicarrier signals. The address adjuster may apply phase adjustments to compensate for non zero phase space signals.

Combinations of these receiver designs may be used in any waveguide or wireless receiver.

[0179] A receiver for an optical system, such as an optical-fiber communication system, is shown in FIG. **14**A. A coupler **150** couples signals from a communication channel **99** (such as an optical fiber or free space) into an optical receiver **200**. Couplers (such as coupler **150**) may include one or more signal-processing systems (not shown) for filtering, shaping, or otherwise processing received signals before detection. Received signals may optionally be down converted by a down converter **205**. A down converter, such as the down converter **205**, may be a heterodyne or a homodyne device. The down converter **205** includes at least one local oscillator **203** and at least one mixer **202** for mixing one or more reference signals (generated by the local oscillator **203**) with at least one of the signals received from the channel **99** to generate one or more down-converted signals.

[0180] A detector **204** may receive signals directly coupled from the communication channel **99**. The detector **204** may receive down-converted signals from the down converter **205**. In an optical version of the detector **204**, optical signals are converted to electrical signals by one or

more photodetectors having high quantum efficiency in the relevant spectral range of the received or down converted signals. The detector **204** may be an electrical or RF detector that is responsive to baseband or intermediate-frequency signals output from the down converter **205**. Detectors (such as the detector **204**) may include signal processing systems (not shown), such as phase-lock loops, digital signal processors, filters, phase-shifters, amplitude adjusters, multi-user detectors, feedback loops, synchronizers, pilot-signal processors, combiners, and the like. Signals output from the detector **204** may optionally be demodulated and/or decoded by a demodulator/decoder **206**.

[**0181**] A detector of the present invention for a multicarrier optical-fiber system may have one of the following designs:

[**0182**] 1. A single photodetector sensitive to all received wavelengths.

[**0183**] 2. A wavelength demultiplexer to separate wavelengths, a received-carrier adjuster (phase or amplitude), and a photodetector.

[**0184**] 3. A wavelength demultiplexer and a plurality of photodetectors. Electrical outputs of the photodetectors may be processed and combined.

[**0185**] FIG. **14**B shows a coupler **150** for coupling signals from a communication channel **99** to a carrier separator **201** (such as a wavelength demultiplexer). The carrier separator **201** separates received signals into a plurality of carrier-signal components that are coupled to at least one receiver, such as receiver **200**. A carrier separator (such as the carrier separator **201**) may separate the received signals into separate carrier signals or groups of carrier signals. A down converter **205** may optionally down convert the signal components. Similarly, an up converter (not shown) may up convert received signals or signal components. Signal up conversion or down conversion may optionally be performed before carrier separation.

[**0186**] The down converter **205** includes a local oscillator **203** and a combiner **202**. A detector **204** receives the carrier signals (which may be down-converted or up-converted carrier signals). The detected signals may be subjected to further processing by a demodulator/decoder **206** that performs either or both demodulation and decoding of the detected signals.

[**0187**] Demultiplexing systems (as well as multiplexers) may include diffraction gratings and multi-layer interference filters. Mach-Zender or Fabry-Perot interferometers may be used for filtering the desired channel. The demodulator/decoder **206** may include a square-law demodulator to demodulate received ASK signals. The receiver **200** may include a phase-diversity receiver.

[**0188**] FIG. **14**C shows a receiver **200** having a signal-component adjuster **209**. Received electromagnetic or electrical signals are coupled into a carrier separator **201**, which separates the received signals into individual carrier signals or groups of carriers. The carriers are coupled to the component adjuster **209** that may adjust carrier-signal parameters (such as magnitude, phase, frequency, polarization, and code). The adjusted carriers are coupled into a demodulator/decoder **206** that may provide preprocessing (including combining) before being demodulated and or decoded.

[**0189**] FIG. **14**D shows a multi-channel (or multi-user) receiver **200** coupled to a communication channel **99**. Received signals are coupled into the receiver **200** by a coupler **150**. A coupler (such as coupler **150**) may include more than one coupling device coupled to a communication channel **99**. Received signals may optionally be down converted by a down converter **205**. A splitter **210** splits down-converted or directly coupled signals. The splitter **210** may be a carrier separator (not shown) or the splitter **210** may produce multiple versions of the received signals by duplicating, sampling, or splitting the received signals. The split signals are coupled into a plurality of preprocessors, such as preprocessors **211**A and **211**B.

[**0190**] The receiver **200** may receive multiple transmissions from at least one transmitter. The received signals are preferably separable through a multiple-access technique based on at least one diversity parameter, such as spread-spectrum code, frequency, time, differential power, polarization, or phase space.

[**0191**] The preprocessors **211**A and **211**B may include an address separator to demultiplex received signals with respect to at least one diversity parameter. If at least one of the diversity parameters is phase space, the preprocessors **211**A and **211**B may include one or more phase processors (not shown) for decoding multicarrier signals having different phase-spaces. A phase processor (not shown) applies phase adjustments to a plurality of carrier signals to provide at least one predetermined phase relation. A phase processor (not shown) may include a plurality of phase processors (not shown) for applying a plurality of phase adjustments to compensate for a plurality of different phase relationships. The preprocessors **211**A and **211**B may provide other digital signal processing techniques to the signals, such as filtering, phase adjustment, phase stabilization, amplitude adjustment, and decoding.

[**0192**] The separated signals may be demodulated and/or decoded. Interference in the signals may be removed by an optional interference canceller **256**. The receiver **200** may include at least one phase-locked loop.

[**0193**] An alternative embodiment of a receiver **200** that performs address separation is shown in FIG. **14**E. A coupler **150** couples optical carrier signals from a communication channel **99** into a first preprocessor **211**A that applies phase adjustments to a plurality of the carrier signals. Outputs from the preprocessor **211**A are coupled into a nonlinear transmission medium (e.g., a KDP crystal) **215**A. The transmission medium **215**A is coupled to a second preprocessor **211**B that applies phase adjustments to a plurality of the carrier signals. Outputs from the preprocessor **211**B are coupled into a second nonlinear transmission medium **215**B. Additional preprocessor/transmission-medium systems may be arranged in series.

[**0194**] A reference source **217** produces a plurality of reference beams that are coupled into each nonlinear transmission medium **215**A to **215**B. A nonlinear process (such as second-harmonic generation) may be used to generate an information signal resulting from the interaction of the multicarrier signals and the reference beams. Other techniques for generating an information signal may be used instead, such as a threshold-power detection technique in which signals output from the preprocessors may excite a gain medium if the carriers are in phase. A detector, such as

detectors **204**A and **204**B receives each of the information signals. The detected signals may be demodulated, decoded, and/or acted upon by an interference canceller (not shown).

[**0195**] FIG. **15** shows a transport-medium interface that couples received optical signals from an optical waveguide **99**A to a free-space propagation environment **99**B. A first coupler **150** couples optical signals out of the waveguide **99**A. The optical signals are optionally down converted by a down converter **205**. The down converter **205** may provide a plurality of mixing signals to the optical signals. The optical signals may be separated according to one or more diversity parameters (such as wavelength) before being down converted. Down conversion may include reducing the frequency separation of the optical signals. The down-converted signals are coupled into the free-space propagation environment **99**B by a second coupler **151**. The coupler **151** may be an antenna system (not shown) including a single antenna element or an array of antennas. The coupler **151** may include at least one processor (not shown) to control beam forming and directionality.

[**0196**] The down converter **205** may include any type of optical-to-RF converter (not shown). An optical-to-RF converter is a device or method that down converts an electromagnetic signal to a signal having a lower frequency. This includes mixers, optical-heterodyne, and optical-homodyne devices. The down converter **205** may include a homodyne device if the optical carriers are modulated with RF signals. The down converter **205** may be any device that has an input of at least one information signal modulated on at least one optical carrier and that outputs at least one RF carrier that is modulated with the information signal(s). The down converter **205** may perform an intermediate process of converting an input electromagnetic signal into an electrical signal, which can be used to modulate one or more RF output signals. A processor (not shown) may perform one or more signal processing steps on an input signal, such as filtering, amplifying, windowing, phase shifting, encoding, decoding, storing, duplicating, inverting, and weighting.

[**0197**] Redundantly modulated multicarrier signals may be used as a multiple-access communication protocol such as CIMA, MC-CDMA, or an OFDM protocol that transmits data over multiple carriers. CIMA signals have advantageous transmission characteristics in a wireless environment. CIMA signals can be used to construct many different wireless protocols including GSM, other TDMA protocols, and CDMA. CIMA provides substantial improvements to system capacity, simplicity, and signal quality, and it greatly increases diversity benefits of conventional multiple-access protocols. CIMA also enables a simple transport-medium interface between optical-fiber and wireless transmissions because a wireless protocol constructed from multiple carriers does not require a protocol change at the interface.

[**0198**] The transport-medium interface may be designed to couple received signals from the free-space channel **99**B to the waveguide **99**A. The transport-medium interface may include a RF-to-optical converter (not shown) for converting received wireless RF signals into optical signals that are inserted into the waveguide **99**A.

[**0199**] FIG. **16** outlines a process of transmitting signals that transition between a waveguide and a wireless channel without requiring a change in protocol. A transmission step **281** involves transmitting at least one CDMA-type CIMA signal into an optical waveguide. A waveguide-propagation step **282** provides propagation of the transmitted signal(s) through the waveguide. Signals are coupled out of the waveguide and into a wireless channel in a transport-medium interface step **283**. This step **283** may involve changing the wavelength of the signals by a frequency-conversion method, such as optical-heterodyne or optical-homodyne processes. A free-space propagation step **284** describes the propagation of the signals coupled into the wireless channel. The free-space propagating signals are received in a wireless-signal reception step **285**.

[**0200**] FIG. **17**A shows a waveguide communication system that includes a cancellation line **199** to cancel signals received at a desired receiver **200**A after they propagate past the receiver **200**A. A first node **150**A receives a desired signal from a waveguide-communication channel **99**. The node **150**A includes a transmitter **100**A and the receiver **200**A. The signal received at node **150**A continues to propagate through the channel **99** to other nodes, such as a node **150**B. Node **150**B includes a transmitter **100**B and a receiver **200**B.

[**0201**] If the signal is a multicarrier signal having a phase relationship that matches the phase profile of the waveguide **99**, then the signal may be undetectable at node **150**B. However, if the carriers are uniformly spaced in frequency, then a detectable constructive-interference signal will be detectable at more than one location in the waveguide **99**. The carrier signals may have a mode relationship that causes a plurality of detectable constructive-interference signals to occur at multiple locations in the waveguide **99**.

[**0202**] At least one cancellation channel **199** is coupled between node **150**A and **150**B. The cancellation channel **199** couples the receiver **200**A to the transmitter **100**B. A desired signal received at node **150**A may be coupled from the receiver **200**A to the transmitter **100**B. Thus, node **150**B receives two versions of node **150**A's desired signal. One version is the wave that propagates through the communication channel **99** to provide a channel-shifted version of node **150**A's desired signal. The second version is received from the cancellation channel **199** and inserted into the node **150**B by the transmitter **100**B. Preferably, the second version is a cancellation signal that is an inverse or out-of-phase replica of the channel-shifted version. Canceling node **150**A's desired signal at a later stage in the waveguide **99** network enables reuse of node **150**A's address space in other parts of the network.

[**0203**] The cancellation channel **199** may be a waveguide or wireless channel. A received signal at node **150**A may be inverted or otherwise adjusted by either the receiver **200**A or the transmitter **100**B. The channel **199** may also provide signal processing (such as phase adjustment that naturally results from dispersion in a nonlinear medium). The channel paths of both the communication channel **99** and the cancellation channel **199** may each be oriented to provide an equal amount of delay to the signals received by receiver **200**A.

[**0204**] The cancellation-channel **199** may include a separate waveguide or it may include a wireless channel. The cancellation channel **199** may be represented by one or more signals that have higher velocities than the signal(s) in the communication channel **99**. The cancellation-channel **199** may consist of signals having a predetermined polarization,

mode, and/or wavelength. Although not shown, one or more cancellation channels may connect nodes **150**A and **150**B to other nodes (not shown).

[**0205**] FIG. **17**B shows a waveguide communication system that cancels signals received at a desired receiver **200**A after they propagate past the receiver **200**A. The communication system shown in FIG. **17**B has similar components to the system shown in FIG. **17**A except that each receiver-transmitter pair at each node **150**A and **150**B has a receiver-transmitter coupling, and the cancellation channel **199** (shown in FIG. **17**A) is replaced by a virtual cancellation channel (not shown). The virtual channel is defined by a signal path of a cancellation signal inserted into the communication channel **99**. The cancellation signal has at least one different signal characteristic (such as polarization, mode, or wavelength) that enables it to propagate faster than the desired communication signal received by receiver **200**A.

[**0206**] The receiver **200**A receives the desired signal and processes it to create a cancellation signal having at least one different signal characteristic (such as polarization, mode, or wavelength). Other processing steps (such as, but not limited to, phase shifting, delay, amplitude adjustment, and filtering) may be performed by the receiver **200**A and/or the transmitter **100**A. The transmitter **100**A transmits the cancellation signal into the channel **99**. The cancellation signal may be coupled into the channel **99** at a different node than node **150**A.

[**0207**] The receiver **200**B preferably receives the cancellation signal before it receives receiver **200**A's desired signal. The cancellation signal is processed by either or both the receiver **200**B and the transmitter l OOB to ensure that the cancellation signal will cancel receiver **200**A's desired signal. This processing may include steps to return the cancellation signal to the same frequency, mode, and/or polarization as receiver **200**A's desired signal received at the node **150**B or any other node (not shown) where the cancellation signal may be inserted.

[**0208**] A process for canceling communication signals from in a communication channel is shown in FIG. **17**C. Signals are coupled out of a communication channel in a coupling step **291**. At least one desired signal is detected from the coupled signals in a separation step **292**. The desired signals are coupled into a cancellation channel that runs parallel to the communication channel in step **293**. The signals from the cancellation channel are coupled into the communication channel to cancel the signals received by the receiver in a final step **294**. Adjustment of the desired signal to create a cancellation signal may be performed in either or both steps **293** and **294**.

[**0209**] Redundantly modulated multicarrier signals, such as CDMA-CIMA signals, enable signal differentiation in both time and frequency domains. CDMA-CIMA codes that are unique in the time domain also have unique frequency-versus-amplitude profiles. The DS-CDMA signals are determined by weights applied to each carrier. Therefore, frequency diversity as well as code diversity can be used to achieve multiple access.

[**0210**] FIG. **18** shows a process diagram for a diversity-based cancellation system. Each of a number N of information signals $s_n(t)$ receive a plurality of weights in a weighting process **440**. A weighting system (not shown) may apply real or complex weights to the signals $s_n(t)$. The weighting system may include magnitude and phase adjustment circuits or processes and the weights may be deterministic or adaptive.

[**0211**] The weighted signals are processed in a coding process **444**. The coding process **444** may include the weighting process **440**. The coding process **444** may include one or more N-point transforms. The variable N in an N-point transform does not necessarily correspond to the number N of information signals or other variables used throughout this specification. N-point transforms include DFT, FFT, WT, HT, RT, PT, Inverse DFTs, Inverse FFTs, Inverse WTs, Inverse HTs, Inverse RTs, Inverse PTs, and any other reversible transform. The coding process **444** can be regarded as a multicarrier-generation process. M coded signals are coupled into a communication channel **99**, which may operate on the signals. Coded signals coupled out of the channel **99** are decoded in a decoding process **244**. The decoding process **244** may include at least one M-point transform. A decoding process, such as decoding process **244**, can be regarded as a multicarrier-separation process. A separator (not shown) may perform the decoding process **244**.

[**0212**] A set of M decoded signals are coupled into an interference-cancellation process **250** that separates the desired signals $s_n(t)$ from interference and outputs the separated desired signals $s_n(t)$. The interference-cancellation process **250** may include cancellation and/or constellation processes. Throughout this specification, the term "interference" is meant to convey any interfering signals including other desired signals $s_n(t)$. The interference-cancellation process **250** or the decoding process **244** may separate the modulated desired signals $s_n(t)$ from the carrier signals, or reduce the received carriers to a carrier having a common diversity parameter. The interference-cancellation process **250** is a signal-separation process. Any type of signal-separation process may be used. The interference-cancellation process **250** may include any type of multi-user or multi-channel detection processes.

[**0213**] The diversity-based cancellation process shown in FIG. **18** is described in U.S. patent application Ser. No. 09/347,182 wherein the coding process **444** is an inverse FFT and the decoding process **244** is an FFT. The decoding process **244** produces M equations with N unknown signals $s_n(t)$. The M equations result from detection (or separation) of the M carriers. To explicitly solve for the N unknowns, M must be greater or equal to N.

[**0214**] The interference-cancellation process **250** may perform signal analysis using a different diversity parameter than the one or more diversity parameters that define the carriers. For example, frequency-diverse carriers may be summed and evaluated in the time-domain to separate information signals $s_n(t)$ encoded on the carriers. Weight-and-sum processes (or other types of cancellation) may be performed on the time-domain signals in order to remove interference and separate the desired signals $s_n(t)$.

[**0215**] FIG. **19** shows a time-domain representation of a plurality of frequency-domain encoded signals. Each pulse **1**, **2**, **3**, **4**, and **5** represents a CIMA signal having three (M=3) multi-frequency carrier signals. CIMA enables 2M quasi-orthogonal signals in the time domain if data symbols

modulated on the carrier signals are limited to binary phase shift key or amplitude modulation, whereas carrier processing yields only M equations. Since the quality of quasi-orthogonal signals can be improved using multi-user detection (which involves the same processes as interference cancellation), processing signals in a diversity-parameter domain that enables quasi-orthogonality of the signals being processed increases the capacity of the communication system. This realization may be extended to many different diversity-parameter domains. For example, many types of multicarrier-defined diversity-parameter domains (such as frequency) may be used to generate CIMA signals that can be processed in the time domain. One of the benefits of alternative diversity-parameter processing is that, in some cases, the benefits of both diversity and enhanced capacity can be obtained.

[0216] Different diversity parameters may be combined to increase capacity and/or diversity benefits in a communication system. FIG. **20**A shows a process diagram of a multiple-diversity communication system. A plurality N of information signals $s_n(t)$ are weighted in a plurality N of weighting processes **440**.**1** to **440**.N. Weighted information signals are coded by a plurality L of coders **444**.**1** to **444**.L or the weighted information signals control the coding of carrier signals generated by the coders **444**.**1** to **444**.L. The coded signals are coupled into a communication channel **99**.

[0217] Coded signals are coupled out of the communication channel **99** and decoded by a plurality of decoding processes **244**.**1** to **244**.P. The decoded signals are coupled to a plurality of signal-separator processes **256**.**1** to **256**.P. Each of the signal-separator processes **256**.**1** to **256**.P generates a plurality of signals representing equations having a number N' of unknowns. A plurality of the signal-separator processes **256**.**1** to **256**.P generates a number of equations that does not equal or exceed the number N of unknowns. However, the number of equations generated by all of the signal-separator processes **256**.**1** to **256**.P equals or exceeds the number N of unknowns. A second-stage signal-separator process **257** may be implemented to combine the equations generated by the signal-separator processes **256**.**1** to **256**.P and determine explicitly the values of the information signals $s_n(t)$. A signal-separator process (such as the signal-separator processes **256**.**1** to **256**.P) may be any interference-cancellation process (using either or both cancellation and constellation processes), such as multi-user detection or multi-channel detection.

[0218] One or more of the signal-separator processes **256**.**1** to **256**.P and **257** may perform quasi-orthogonal signal separation in an alternative diversity-parameter domain. For example, one or more of the signal-separator processes **256**.**1** to **256**.P and **257** may include combining received signals and processing the superposition of the signals in the time domain.

[0219] FIG. **20**B shows an alternative process diagram for a multiple-diversity communication system. A plurality N of information signals $s_n(t)$ are weighted in a plurality N of weighting processes **440**.**1** to **440**.N. Weighted information signals are coded by a plurality L of coders **444**.**1** to **444**.L or the weighted information signals control the coding of carrier signals generated by the coders **444**.**1** to **444**.L. The coded signals are coupled into a communication channel **99**.

[0220] Coded signals are coupled out of the communication channel **99** and decoded by a plurality of decoding processes **244**.**1** to **244**.P. The decoded signals from each decoding process are coupled into a plurality of signal-separator processes **256**.**1** to **256**.P. Outputs from the signal-separator processes **256**.**1** to **256**.P may be coupled to a second-stage signal-separator process **257**.

[0221] Signal coding (described throughout the specification) with respect to transmitter-side coding can involve encoding carrier signals with weights according to a signal profile (such as a spatial gain distribution at a receiver) that facilitates the separation of multiple received information signals having the same carriers. The weights may be deterministic or adaptive. The weights may be complex. A weight coder may include at least one phase shifter and/or delay device. Decoding processes may include cancellation or constellation methods of signal estimation.

[0222] U.S. patent application Ser. No. 08/862,859 describes spatial gain variations of signals transmitted in free space. The spatial gain of a received signal is the complex-valued amplitude of the signal relative to at least one signal space. A signal space is defined by at least one diversity parameter. PCT Appl. No. WO95/03686, entitled "Active Electromagnetic Shielding" describes how receivers that are spatially separated receive different proportions of signals from spatially separated transmitters. The Active Electromagnetic Shielding application also describes cancellation circuits that can be used to separate desired signals from interfering signals.

[0223] Spatial gain distributions describe all effects that result in the complex amplitude or other characteristic of a signal varying with respect to a diversity parameter (or signal space). Spatial gain distributions result from propagation effects including, but not limited to multipath fading, shadowing, absorption, scattering, path loss, and diffraction. Spatial gain distributions may also be determined by either or both transmitter- and receiver-related parameters, such as directivity, masking, diffraction, polarization, phase space, and coding.

[0224] Both wireless and guided-wave signals have spatial gain variations. In free space, spatial gain variations result from many environmental effects such as shadowing, multipath, absorption, scattering, and path loss. Spatial gain variations can also be affected by the transmission system, which can control beam shape, directionality, and polarization. Dispersion, reflections, attenuation, and amplification can affect spatial gain in a waveguide.

[0225] Frequency gain variations can result from the frequency-dependent nature of spatial gain variations. Frequency gain is the complex amplitude-versus-frequency distribution of a frequency-diverse signal. Differences in the amplitudes of each frequency component of frequency-diverse signals transmitted from different transmitters enable multiple access via cancellation or constellation processing methods. U.S. patent application Ser. No. 09/347,182 describes the use of frequency diversity as a spatial processing technique that does not require an antenna array. Another benefit of the frequency-diversity method compared to spatial diversity methods is that it does not rely on the fast-fading environment of the communication channel. Frequency diversity multiplexing can be performed in any multipath environment.

[0226] FIG. **21**A illustrates two diversity parameters that can be used for increasing diversity or capacity. Spatial

processing is illustrated by a horizontal bar **21**. Spatial processing is performed in a particular frequency band (such as f_1) in order to enable reuse of that band. System capacity can be proportional to the number of spatial locations (such as S_1, S_2, and S_3) from which signals are sampled. Optimal bandwidth efficiency is achieved when each frequency band is used to transmit different information streams. In conventional multiple-access schemes, redundantly transmitting information in the frequency domain reduces bandwidth efficiency.

[**0227**] Frequency-diversity processing is illustrated by a vertical bar **22** that spans multiple frequencies f_1, f_2, and f_3. Information is redundantly transmitted on each of the frequency bands. Using the cancellation or constellation methods described in the '182 application, multiple redundantly transmitted information signals can be separated. Frequency-diversity processing may be performed at multiple receiver locations (such as S_1, S_2, and S_3) in order to achieve the optimal bandwidth efficiency.

[**0228**] Frequency-diversity processing benefits systems that have a small number of antennas by providing frequency reuse and mitigating signal loss due to deep fades. Although it is counter-intuitive to redundantly modulate carrier signals when attempting to increase capacity, redundant-modulation techniques (such as frequency-diversity processing and CIMA) can provide improved capacity as well as diversity. A unique aspect of the invention is that redundant modulation with respect to a diversity parameter achieves an increase in bandwidth efficiency.

[**0229**] FIG. **21**B illustrates the use of nested interferometry to optimize capacity. Redundantly modulated carriers having different frequencies are frequency-diversity processed at each spatially separated receiver. Each receiver produces three equations having a number of unknown information signals. These equations can be linked together via spatial processing (which in this case is the process of combining the equations) to create nine unique equations. Therefore, up to nine different unknown signals can be solved explicitly in this example.

[**0230**] Either of the diversity parameters shown in FIG. **21**A and FIG. **21**B may be replaced by another diversity parameter. Signal-diversity parameters include signal characteristics, such as polarization states, frequencies, time, phase space, modes, directionality, and CDMA or other spread-spectrum codes. Carrier signals may be defined by any of these parameters or any combination of these parameters. FIG. **21**A and FIG. **21** B may include additional axes representing additional diversity-parameter dimensions that may be used for multiplexing, diversity, and interferometric combining.

[**0231**] FIG. **22**A shows a frequency-diversity interferometry multiplexing system. A plurality of transmitters **100.1** to **100**.M each includes a carrier-signal generator **102.1** to **102**.M, a carrier-code generator **106.1** to **106**.M, an information-signal modulator **104.1** to **104**.M, and a coupler **150.1** to **150**.M coupled to a communication channel **99**. At least one receiver **200** is coupled to the communication channel **99**. The receiver **200** includes a separator, such as wavelength demultiplexer **201**, which is coupled to a down converter **205** and an interference canceller **256**. A down converter (such as down converter **205**) may be a decoder.

[**0232**] Each carrier-signal generator **102.1** to **102**.M generates a plurality of carrier signals. Each of the carrier signals is distinguished by values of one or more diversity parameters. In this case, the carrier signals are distinguished by different frequencies (f_1, f_2, . . . f_n). It is assumed that each of the signal generators **102.1** to **102**.M generates a similar set of carrier signals. Each set of carrier signals is modulated by a plurality of carrier codes (c_{mn}) from its respective carrier-code generator **106.1** to **106**.M. The codes generated by the carrier-code generator **106.1** to **106**.M appear unique when observed by the receiver **200**. Each set of coded carrier signals is modulated by one of the information-signal modulators **104.1** to **104**.M. Each of the modulated carriers is coupled into the communication channel **99**. The channel **99** may be wireless, waveguide, or a combination of both.

[**0233**] Transmitted signals are coupled out of the communication channel **99** and received by the receiver **200**. The receiver **200** demultiplexes the received signals into wavelength (or frequency) components. Wavelength demultiplexing may include converting the received signals to electrical signals and performing digital signal processes, such as Fourier transforms. Demultiplexing may also be performed using conventional optical demultiplexing techniques. The demultiplexed signals are down converted to a common frequency band. The frequency band may be the baseband information signal or some intermediate frequency. The down converting process may be performed during wavelength demultiplexing. The down converted signals are coupled into a canceller **256**, which separates the interfering signals using a cancellation method, such as weight and sum. The canceller **256** may also perform a constellation method in addition to, or instead of the cancellation method.

[**0234**] Separation (i.e., an explicit solution) of the information signals depends on receiving a number of algebraically unique proportions of the signals by the receiver. Separation quality (e.g., signal to noise, signal to interference, or signal to noise plus interference) depends on the proportions of the received signals. The proportions are determined by the carrier codes applied to carrier signals and the effect of the channel on the transmitted carriers.

[**0235**] Optimizing the separation quality of the received signals can be achieved by adjusting the carrier codes and the channel characteristics. Carrier codes are adjusted by any of the carrier-code generators **106.1** to **106**.M. The channel **99** can be adjusted by adjusting transmission characteristics that affect the channel **99**. In a wireless system, the directionality of a transmitting antenna determines the channel through which transmitted signals propagate. In either of these cases, a known training sequence may be used to optimize the separation quality. The training sequence may be performed in a predetermined orthogonal channel, such as a time interval, spread-spectrum code, frequency band, directivity, phase space, or polarization.

[**0236**] FIG. **22**B shows a cascaded interferometry system that uses frequency-diversity interferometry multiplexing and spatial interferometry multiplexing. A cascaded interferometry system is defined as a communication system that performs interferometry with at least two different diversity parameters to enhance capacity. The transmitters are the same as in FIG. **22**A. However, there is a plurality of spatially separated receivers **200.1** to **200**.M. Each of the receivers **200.1** to **200**.M includes a separator, such as a wavelength demultiplexer **201.1** to **201**.M, coupled to a

down converter **205.1** to **205**.M. The outputs of the down converters **205.1** to **205**.M are input to an interference canceller **256**.

[**0237**] Coded transmission signals that are coupled into the channel **99** have an amplitude-versus-frequency profile that depends on the coding of the carrier signals. As the signals propagate through the channel **99**, their amplitude-versus-frequency profile can change. Signals may exhibit different amplitude-versus-frequency profiles at different locations in the channel **99**. Signals in the channel **99** are expressed by the following equation:

$$C_1(x)s_1(t)+C_2(x)s_2(t)+ \ldots +C_N(x)s_n(t)$$

$C_n(x)$ is the amplitude-versus-frequency profile associated with the nth transmitted information signal $s_n(t)$. The value of the amplitude-versus-frequency profile $C_n(x)$ depends on the nth code applied to the signal $s_n(t)$ and a channel parameter x. The channel parameter x describes the state of the communication channel at a specific location in the channel relative to the location of the transmitter(s). Signals $R_k(t)$ received by a kth receiver are given by the following equation:

$$R_k(t)=C_1(x_k)s_1(t)+C_2(x_k)s_2(t)+ \ldots +C_N(x_k)s_N(t)$$

The amplitude-versus-frequency profile $C_n(x_k)$ of signals received by the kth receiver may depend on the relative location (and in some cases, the absolute location) of the kth receiver with respect to the transmitter(s).

[**0238**] The received signals $R_k(t)$ are wavelength demultiplexed (e.g., separated into their component wavelengths or frequencies) into M component signals. The information signals $s_n(t)$ are removed from the component signals or otherwise converted to signals having a common carrier frequency. The demultiplexing and down-conversion processes produce a plurality M of component signals $R_{km}(t)$ representing combinations of the information signals $s_n(t)$. The component signals $R_{km}(t)$ may represent either linear or nonlinear combinations of the information signals $s_n(t)$. Preferably, the combinations are algebraically unique.

[**0239**] An expression for a particular component signal $R_{km}(t)$ that consists of a linear combination of information signals $s_n(t)$ is represented by:

$$R_{km}(t)=(\alpha_{1k}+\alpha_{2k}+ \ldots +\alpha_{Nk})s_1(t)+(\beta_{1k}+\beta_{2k}+ \ldots +\beta_{Nk})s_2(t) + \ldots +(\zeta_{1k}+\zeta_{2k}+ \ldots +\zeta_{Nk})s_N(t)$$

Each of the information signals $s_n(t)$ has a series of scaling factors α_{mk}, β_{mk}, . . . , ζ_{mk} that depends on the amplitude-versus-frequency profile $C_n(x)$ applied to the carrier signals. The values of the scaling factors also depend on the effect of the communication channel **99** on the profile. The number N of scaling factors in each series is the number of signals $s_n(t)$ transmitted by different transmitters. Because there are M component signals $R_{km}(t)$ (which represent M equations of N unknowns), it is preferable that M be greater or equal to the number N of unknowns if there is only one receiver.

[**0240**] If there are K receivers, the number of component signals (equations) $R_{km}(t)$ presented to the canceller **256** is K·M. If the number of algebraically unique equations input to the canceller exceeds the number of unknowns (information signals $s_n(t)$), the unknowns can be solved explicitly. The output of the canceller **256** includes the information signals $s_n(t)$ or estimates of the information signals $s_n(t)$.

[**0241**] FIG. **23** shows a spread-spectrum interferometer that can be used in a communication channel **99**. At least two transmitters **100**A and **100**B transmit redundantly coded information signals $s_n(t)$ that are received and decoded by at least one receiver **200**. The received signals undergo interference cancellation to separate or estimate the information signals $s_n(t)$.

[**0242**] A first transmitter **100**A includes a signal modulator **104**A that receives at least one information signal $s_1(t)$ and provides a plurality of weights α_1 and α_2 to the information signal $s_n(t)$ to generate a plurality of weighted information signals. The weighted information signals may be used to modulate a plurality of spread-spectrum signals produced by a multicarrier-signal generator **102**A wherein each of the spread-spectrum signals is considered a carrier. The spread-spectrum signals may be CDMA, Frequency Hopped, Time Hopped, hybrid spread spectrum, N-point transform, or any type of multicarrier spread-spectrum signals. The weighted information signals may be input to the multicarrier-signal generator **102**A and processed to produce a plurality of spread-spectrum signals that are information coded. The information-coded signals are coupled into the communication channel **99** by a coupler **150**A. In this case, the communication channel **99** is a wireless channel and the coupler includes an antenna **158**A. The signals that are coupled into the channel **99** by the first transmitter **100**A are represented by the following expression:

$$C_1(\alpha_1 s_1(t))+C_2(\alpha_2 s_1(t))$$

[**0243**] A second transmitter **100**B that has the same general design as the first transmitter **100**A couples a plurality of spread-spectrum carrier signals into the channel **99**. Each spread-spectrum carrier signal is modulated with at least one weighted (β_1, β_2) information signal $s_2(t)$. The signals that are coupled into the channel **99** by the second transmitter **100**B are represented by the following expression:

$$C_1(\beta_1 s_2(t))+C_2(\beta_2 s_2(t))$$

[**0244**] Spread-spectrum signals C_1 and C_2 represent different coded spread-spectrum signals. The spread-spectrum signals have characteristics that depend on their coding and the signals that they encode. Although two or more spread-spectrum signals (such as $C_1(\alpha_1 s_1(t))$ and $C_1(\beta_1 s_1(t))$) use the same code, the coded signals have values that depend on their arguments ($\alpha_1 s_1(t)$ and $\beta_1 s_1(t)$). A coupler **150**C that includes at least one antenna **158**C couples the transmitted signals out of the channel **99** for providing received signals to the receiver **200**.

[**0245**] The values of the coded signals are realized upon decoding the spread-spectrum signals $C_1(\alpha_1 s_1(t))$ and $C_1(\beta_1 s_2(t))$ and separating interfering signals. A decoder **222** decodes the received signals using a plurality of inverse spreading codes. If multiple information signals had been encoded with the same spread-spectrum code, the process of decoding those signals produces multiple interfering information signals. The interfering signals are input to an interference canceller **256** that separates the signals using cancellation or constellation techniques.

[**0246**] The values α_1, α_2, β_1, and β_2 applied to the transmitted information signals $s_1(t)$ and $s_2(t)$ represent any method of adjusting the information signals $s_1(t)$ and $s_2(t)$ to allow differentiation between decoded received signals. The step of adjusting the information signals $s_1(t)$ and $s_2(t)$ may

result from the signals propagating in the channel **99**. Differentiation may be achieved by any combination of interference cancellation, constellation techniques, filtering, and demodulation.

[**0247**] FIG. **24** shows a redundant-carrier communication system in which a plurality of carriers are received and separated with respect to at least one diversity parameter and then processed and combined with respect to another diversity parameter. In particular, carriers that are defined by signal frequency are modulated with time-dependent or phase-dependent coded information signals. A signal consisting of the modulated carriers is received and separated into individual modulated carriers. The carriers are decoded and summed to recover the time-domain information signals.

[**0248**] A transmitter **100** receives a plurality of information signals $s_1(t)$, $s_2(t)$, and $s_3(t)$, which are split by a plurality of splitters **210**A, **210**B, and **210**C. The split signals are coded by a modulator **104** that acts upon a plurality of carrier signals produced by a carrier-signal generator **102**. Carrier signals that are coded and modulated with the information signal are coupled into a communication channel **99** by a plurality of couplers **150**A, **150**B, and **150**C.

[**0249**] At least one receiver **200** receives the coded and modulated carrier signals. At least one coupler **151** couples the carriers out of the channel **99** to a carrier separator **221** that separates the received carrier signals. In this case, the carriers are defined by their wavelength (or frequency). The carrier separator **221** may be a wavelength demultiplexer (not shown). The separated carriers are input to a weight compensator **222** that applies inverse coded signals with respect to the codes applied to the carriers by the modulator **104**. The weight compensator **222** may compensate for variations of the code values resulting from distortion in the channel **99**, the coupler(s) **150** and **151**, the transmitter **100**, and the receiver **200**.

[**0250**] A plurality of carrier signals having different wavelengths are combined in each of a plurality summing devices **255**A, **255**B, and **255**C. The summed signals are time-domain representations of the transmitted information signals $s_1(t)$, $s_2(t)$, and $s_3(t)$. The summing devices **255**A, **255**B, and **255**C may include signal processors to shape the summed signals or filter the resulting sums to remove interference and/or noise. Signals output from each summing device **255**A, **255**B, and **255**C may include one information signal. The outputs of the summing devices **255**A, **255**B, and **255**C may be coupled to a multi-user detector (not shown) for removing interference in signals output from the summing devices **255**A, **255**B, and **255**C.

[**0251**] One of the benefits of the receiver **200** shown in FIG. **24** is that it achieves separation of signals that interfere in at least one diversity dimension by processing the signals in a different diversity dimension. In this case, redundantly modulated carrier frequencies are combined and processed in the time domain to demultiplex multiple information signals modulated on the carriers. Separation of the information signals can be accomplished using a single-stage weight-and-sum processor and filters instead of a multi-stage cancellation network.

[**0252**] FIG. **25**A illustrates a method of communication that uses redundantly modulated multicarrier signals. A coding step **300** is an optional step that may be used to apply a code to at least one information signal $s_n(t)$. The code may be a spread-spectrum code, an encryption code, or a multi-carrier code that can be used to help separate multiple received signals. The coding step **300** may involve applying the code directly to a plurality of carriers before or after a modulation step **301** in which the carriers are redundantly modulated with the information signal(s). The carriers are defined by at least one diversity parameter. The modulated carriers are coupled into a communication channel in a transmit step **302**. The carriers may be coupled into the channel by more than one coupler. The communication channel may be a wireless or guided wave channel. The transmit step **302** depends on the spectrum of the electromagnetic carriers and the type of channel. The transmit step **302** may also depend on characteristics of the carriers (such as phase and polarization). The channel may perform or enhance the coding step **300** as the carrier signals propagate through it. Thus, the coding step **300** may be affected by the propagation characteristics of the channel.

[**0253**] A receive step **303** describes the process of coupling the modulated carriers out of the channel. The method of receiving the carriers depends on the channel and the characteristics of the modulated carriers. For example, polarized carriers may be received by receivers having at least one predetermined polarization. The receive step **303** may involve coupling signals out of the channel from multiple couplers. The couplers may be spatially separated or otherwise separated with respect to at least one diversity parameter.

[**0254**] The received carriers are separated in a carrier-separation step **304** that separates the carrier signals with respect to at least one diversity parameter. Separation of the received carriers may be performed by at least one demultiplexer, such as a wavelength demultiplexer, a bank of frequency filters, a polarization device, a spread spectrum decoder, or a time-domain sampler. Each of the carriers is down-converted to a predetermined frequency band in a down-convert step **305**. Down-conversion may be a heterodyne or homodyne process. The down-conversion step **305** may involve the removal of the carrier signal(s) from the information signal(s). The predetermined frequency band may be the information baseband or an intermediate-frequency signal. The down-converted signals are combined in an information-signal separation step **306**. The separation step **306** may involve at least one cancellation method (such as a weight-and-sum cancellation), at least one constellation method, or a combination of cancellation and constellation methods. The separation step **306** may involve a method of nonlinear processing as part of a method combining cancellation and constellation processing.

[**0255**] FIG. **25**B illustrates a method of communication that uses redundantly modulated carrier signals. The communication method of FIG. **25**B has the same coding step **300**, modulation step **301**, transmit step **302**, receive step **303**, and carrier-separation step **304** shown in FIG. **25**A. The carrier-separation step **304** is an optional step that may be performed in conjunction with the receive step **303**, or it may be performed as part of an optional decoding step **307**. The decoding step **307** involves compensating for the variation in the relative phase between at least some of the received carrier signals due to deliberate coding (such as the coding step **300**) or unintentional coding (such as distortion

resulting from propagation in the channel). The carriers are acted on by a weight-and-sum step **308** for combining the carriers to produce a time-domain signal that is processed by a time-domain processor. Weights applied to the carriers may be complex weights that adjust phase or add delay to the carriers. The weighting of the signals may be performed by the decoding step **307**. The weight-and-sum step **308** may involve only summing.

[**0256**] FIG. **25**C illustrates a method of receiving communication signals that include redundantly modulated carrier signals. Redundantly modulated carrier signals are coupled out of a communication channel in a receive step **303**. The receive step **303** provides reception via multiple couplers to generate a plurality of different samples of received multicarrier signals. A carrier separation step **304** separates the carrier signals from each of the plurality of couplers. This step **304** may include down converting the modulated carriers to a common frequency or separating the modulation signals from the carrier signals. A weight-and-sum step **308** involves coupling different carrier signals from a plurality of the couplers into a canceller (such as a weight-and-sum canceller) or a constellation processor. An optional multi-user detection step **309** involves receiving signals output from the canceller and optimizing detection using an optimization technique. The multi-user detection step **309** may be incorporated into the weight-and-sum step **308**.

[**0257**] An optimization technique involves any kind of dynamic process for adjusting weights in an interference-cancellation system/process or other channel-inversion system/process. Optimization may involve an iterative update process that causes convergence of the weight values. An optimization process may include the use of an update processor that computes a rate of change for each time-varying weight or channel parameter. The update processor may adjust weights of a canceller or channel inverter (such as an inverse filter) in response to a rate of change associated with the channel. The optimization technique may involve any optimal control technique including maximum or minimum functions, finite-element optimizations, and calculus of variations.

[**0258**] FIG. **26** shows a communication system that uses redundantly modulated carriers to enhance diversity and uses spatial interferometry multiplexing to increase capacity. Spatial interferometry multiplexing may provide reuse of the diversity parameter (e.g., frequency or polarization) that defines the carriers. A modulator **104** modulates a plurality of information signals $s_n(t)$ onto a plurality of carrier signals generated by a multicarrier-signal generator **102**. In this case, the signal generator **102** produces carrier signals having different frequencies f_1, f_2, and f_3. The modulated multicarrier signals are coupled into a communication channel **99** by a plurality of couplers **150**A and **150**B. In this case the communication channel **99** is a wireless-communication environment. Each coupler **150**A and **150**B includes an antenna **158**A and **158**B, respectively. The antennas **158**A and **158**B may be separated antenna elements or antenna-array processors (not shown).

[**0259**] Modulated carriers may experience spatial gain variations (spatially dependent variations of their complex amplitudes) due to propagation effects (such as multipath, shadowing, path loss, absorption, and scattering) or transmitter **100** parameters (such as beam shape, carrier weights, information-signal weights, and scanning). Modulated carrier signals are coupled out of the channel by a plurality of couplers, such as antennas **158**C and **158**D. A receiver **200** separates and processes the information signals $s_n(t)$ modulated on the carriers. The receiver **200** may include a multi-user detector and/or a diversity combiner. The receiver **200** may have a design similar to the receiver design shown in FIG. **22**A, FIG. **22**B, and/or FIG. **23**. The receiver **200** may include a receiver module (as shown in FIG. **24**) for each receiver coupler **158**C and **158**D.

[**0260**] One benefit of the communication system shown in FIG. **26** is that the use of redundantly modulated frequency-diverse carriers reduces the influence of the communication channel on the spatial gain of the received signals. For example, in a narrow band system (or OFDM system where different frequency bands carry different information streams) rapid variations occur in the received signals' gain due to changes in the signal paths between the transmitter **100** and the receiver **200**. Changes in the signal paths result from relative motion between the transmitter **100** and the receiver **200**. Objects (such as reflector **160**) that move in the communication environment can cause signal-path changes if these objects reflect signals that propagate between the transmitter **100** and the receiver **200**. The variation in intensity occurs rapidly (especially at high frequencies) because path variations as small as a fraction of a wavelength can significantly effect the gain of the received signals.

[**0261**] In spatial interferometry multiplexing, weights in a spatial demultiplexer are set according to training sequences. Transmitted signals having predetermined values are received and used to calibrate the spatial demultiplexer. In a flat-fading environment, the spatial demultiplexer needs to be calibrated frequently.

[**0262**] Frequency diversity mitigates flat fading. Information signals $s_n(t)$ transmitted on different carriers are combined in the receiver **200** to generate a plurality of composite information signals $s'_n(t)$. Because frequency-selective fading has a minimal impact on the gain of the composite information signals $s'_n(t)$, large-scale fading effects (such as shadowing and path loss) may be relied upon to provide the composite information signals $s'_n(t)$ with predetermined spatial gains. For example, reflector **160** may provide a large-scale slowly varying effect, such as shadowing. The reflector **160** blocks the direct path of a transmission from the transmit antenna **150**B to the receive antenna **158**D.

[**0263**] Large-scale fading effects require less-frequent updates of the weights in the receiver **200** than small-scale flat fading. Frequency diversity can reduce the effects of the channel **99** on transmitter-controlled and receiver-controlled spatial gain distributions of the signals $s'_n(t)$. The spatial gain distributions may be controlled by either or both the transmitter **100** and the receiver **200** using relative positions of couplers, coupler directionality, masking, polarization, or various combinations of transmitter and/or receiver control methods.

[**0264**] Although only two transmitter couplers **150**A and **150**B and two receiver couplers **158**C and **158**D are shown, the number of either set of couplers may be greater. The transmitter **100** may include a plurality of couplers **150**A and **150**B as shown in FIG. **26** or the there may be a plurality of

transmitters having one or more couplers (not shown). The number of receiver couplers (such as couplers **158**C and **158**D) may exceed the number of carriers. Likewise the number of transmitter couplers (such as couplers **150**A and **150**B) may exceed the number of carriers. Spatial interferometry multiplexing may be performed to separate the received signals or to improve signal quality if both the number of carriers and the multiple access scheme are sufficient to provide estimates of the unknown signals. Diversity combining may also be used to enhance signal quality, preferably when the diversity parameters are not needed for enhancing system capacity.

[**0265**] The number of received signals that can be separated can be proportional to the number of receiver couplers. The number of received signals that can be separated is also related to the number of carriers and the techniques used to detect and separate signals. For example, in time-domain processing, the signals may overlap each other. A simple multi-user detector (included in the receiver **200**) may separate the overlapping signals to provide a substantial increase in bandwidth efficiency. Similarly, spectral overlap of orthogonal carriers improves the spectral efficiency of the communication protocol. Spatial interferometry multiplexing is a type of multi-user detection that separates signals received by spatially diverse, angle-diverse, or polarization-diverse receivers by canceling interference from the desired signals. Combining spatial interferometry multiplexing and multi-user detection based on a different diversity parameter can enhance capacity, enhance diversity, or enhance both capacity and diversity benefits.

[**0266**] FIG. **27** shows a receiver **200** that receives multicarrier signals and achieves benefits of spatial diversity, frequency diversity, and capacity enhancement of spatial interferometry multiplexing. The receiver **200** has a plurality of couplers **150**A, **150**B, and **150**C coupled to a communication channel (not shown) to generate a plurality of samples of multicarrier signals. The communication channel (not shown) may be a waveguide or wireless channel. The multicarrier signals received at each coupler **150**A, **150**B, and **150**C are separated by a diversity-parameter demultiplexer **210**A, **210**B, and **210**C.

[**0267**] In a WDM system, the demultiplexers **210**A, **210**B, and **210**C are wavelength demultiplexers. In a wireless multicarrier system where each carrier is defined by its frequency, the demultiplexers **210**A, **210**B, and **210**C are filter banks or frequency-separation processes that spectrally decompose the received signals into a set of frequency bins. A frequency bin represents the frequency band of a filter in the filter bank. The demultiplexers **210**A, **210**B, and **210**C may include down converters, such as heterodyne or homodyne systems (not shown) to recover modulated information signals from each carrier or to convert each carrier to a common carrier signal. A common carrier signal may be defined by an intermediate frequency. The demultiplexers **210**A, **210**B, and **210**C may provide orthogonal outputs (such as separate carrier frequencies) or non-orthogonal outputs in which at least one separated carrier is not entirely separated from at least one other carrier.

[**0268**] Each of the separated carriers is coupled into at least one of a plurality of weight-and-sum systems **255**A, **255**B, and **255**C. In this case, each separated carrier from each demultiplexer **210**A, **210**B, and **210**C is coupled into different weight-and-sum systems **255**A, **255**B, and **255**C. If the number of weight-and-sum systems **255**A, **255**B, and **255**C exceed the number of carriers, then multiple carriers from at least one of the demultiplexers **210**A, **210**B, and **210**C may be coupled into at least one weight-and-sum system **255**A, **255**B, and **255**C. The weights applied by the weight-and-sum systems **255**A, **255**B, and **255**C may be deterministic or adaptive. Delay or phase-alignment units (not shown) may be incorporated into the weight-and-sum systems **255**A, **255**B, and **255**C. Signal outputs from each of the weight-and-sum systems **255**A, **255**B, and **255**C include at least one substantially isolated information signal $s_n(t)$. The weight-and-sum systems **255**A, **255**B, and **255**C may include filters (not shown) or digital signal processing systems (not shown) to enhance reception of desired signals and mitigate interference and noise. The signal outputs from the weight-and-sum systems **255**A, **255**B, and **255**C may optionally be coupled into a multi-user detector **256**.

[**0269**] The receiver shown in FIG. **27** may be adapted to include a larger number of couplers (such as couplers **150**A, **150**B, and **150**C) than carrier signals. The number of transmitter couplers and the number of receiver couplers may each exceed the number of carrier signals transmitted or received by each coupler. The couplers may be spatially separated antennas, array processors, or optical couplers. Although the couplers **150**A, **150**B, and **150**C shown in FIG. **27** are spatially separated, the couplers **150**A, **150**B, and **150**C may have any type of diversity, such as spatial, directionality, polarization, path, phase-space, time, or code diversity. The couplers **150**A, **150**B, and **150**C may be diverse in more than one diversity parameter. Similarly, the carriers may have any combination of diversity parameters.

[**0270**] Carrier signals shown in FIG. **26** and FIG. **27** are represented as multi-frequency (or multi-wavelength) signals. These carriers (as well as carriers represented in other figures) may be coded. For example, a group of direct-sequence CDMA codes may be created from the appropriate selection of weights applied to each of the carriers. Although coded, the carriers are still redundantly modulated with information signals. The weight-and-sum systems **255**A, **255**B, and **255**C shown in FIG. **27** may include one or more correlators (not shown) and/or one or more matched filters (not shown) for acting on either or both the time-domain and the frequency-domain signals resulting from the carriers. The receiver **200** in either FIG. **26** or FIG. **27** may perform multi-user detection between either or both the time-domain and frequency-domain coded carrier signals.

[**0271**] Linear cancellation processes (e.g., weight-and-sum processes) require a number of algebraically unique equations that equals or exceeds the number of unknown values. FIG. **28**A shows a receiver **200** that receives a deficient number of receive signals **265** (i.e., equations) and applies a nonlinear process **266** to at least one of the equations to generate one or more additional algebraically unique equations. The nonlinear equation(s) have more than one solution. Therefore, some information about the unknowns (such as possible values) is required to explicitly solve the equations. A multi-user detector **256** processes the equations. This processing is supported by information about the unknowns **267**, which is input to the multi-user detector **256**. Information about the unknowns may be acquired through training or estimation processes.

[0272] FIG. **28**B shows steps of a method for separating unknown signals in a plurality of received signals. A number M of equations having N unknown signals is received in a first step **270**. A determination of M≧N is made in a second step **271**. If the result is "yes," the equations may be processed by cancellation and/or constellation methods **272**. If the result is "no," the equations may be processed by a combined cancellation and constellation process **273**, a constellation process **275**, or a cancellation and/or constellation method that uses a nonlinear process **274**. The nonlinear process **274** may be applied to at least one of the equations to provide an additional number of equations. The equations are passed on to a cancellation step **280** that uses information about at least one of the unknowns (such as possible values) to explicitly solve the equations.

[0273] FIG. **29** illustrates a method of solving M linear equations having N unknown signals where M<N. M received signals are obtained from a sampling step **270**. A sampler (not shown) is used to provide a plurality of samples (received signals) that have linear combinations of at least one of the N unknown signals. The number M of samples is compared to the number N of unknowns in a comparison step **271**. If M<N, a nonlinear processing step **274** acts on at least one of the samples. An output step **286** provides one or more additional algebraically unique equations (which are nonlinear equations) such that M≧N. An equation-solving step **287** provides solutions to the M equations. However, at least one solution contains more than one set of possible values. An information step **288** involves submitting additional information about the unknown signals (such as possible values for the unknowns or relationships between the values of the unknowns) so that the equations can be solved explicitly (or at least used to provide estimates having a high degree of accuracy) in a decision step **289**. The values of the unknowns are output in an output step **290**.

[0274] Many of the interferometry-multiplexing protocols (which use interference cancellation and other multi-user detection schemes) achieve increased bandwidth efficiency by indirectly exploiting the dimension of power. For example, differential modulation schemes require greater power levels to enhance capacity while maintaining the same BER or SNR as simple modulation. For example, the SNR of an M-ary amplitude modulation (AM) scheme (such as quadrature AM) depends on the difference between the AM steps. BER or SNR in a interferometry-multiplexing protocol depends on the difference between signal levels of the desired signal and the interference (which may be other desired signals). Also, the additional antennas used in spatial interferometry multiplexing cause increased noise levels.

[0275] M-ary AM requires an approximately doubling of the required system power for each increment in the number M. The system power ranges from proportions of 0 to 2^{m-1} depending on the transmitted data symbols. A multiple-access version of M-ary AM is differential-ASK modulation. The most basic implementation of differential ASK involves each of a plurality N of transceivers (such as transceivers **121**A to **121**G shown in FIG. **30**) transmitting N different information signals that each have a binary set of values received at one or more transceivers (such as a base transceiver **120**). The "on" value of each nth received signal corresponds to a unique signal level, which may be proportional to 2^n where n=0, . . . (M−1). The "off" value of each transmitted signal is zero. In order to optimize power conservation, nearby transceivers **121**A, **121**B, and **121**C may generate the highest-power received transmissions at the base transceiver **120**.

[0276] Differential-modulation techniques may be used in array systems where multipath fading, shadowing, and other channel effects can assist in the differential qualities of the received signals to optimize power conservation. A more complex version of the differential-ASK protocol uses more than two signal levels for each transceiver. FIG. **31**A and FIG. **31**B show SNR variations of signals separated from a 3-element array and a 4-element array, respectively. The y-axis shows SNR and the x-axis indicates average interference as a fraction of the desired signal level received by an array element. The received power level for each desired signal is set to the average power corresponding to the differential ASK that supports the same number of users (channels). A SNR of 30 dB is an arbitrary baseline set for differential-ASK performance. A SNR of 30 dB or higher is achieved by a 3-element array for average interference levels below 0.42. A 4-element array exceeds differential-ASK SNR for average interference levels below 0.48. Although there are conditions in which an interferometry technique (such as spatial interferometry multiplexing) provides superior power efficiency and/or signal quality compared to differential-modulation techniques, differential modulation (such as differential ASK) does not require multiple antennas or cancellation systems.

[0277] FIG. **32** shows a two-dimensional signal space comprised of a spatial dimension and a differential-power dimension. The signal space can be designed to achieve an optimal compromise between several factors including system complexity, power efficiency, BER or SNR, and stability. Diversity parameters may be used to enhance signal quality. For example, effects of the multipath-fading channel can be mitigated by providing time-domain signals with frequency diversity. The signal space can be implemented to optimize operating characteristics, such as, but not limited to power efficiency, BER, SNR, signal to noise plus interference, and signal strength.

[0278] In waveguide and/or wireless communications, a remote transceiver may communicate a desire to initiate communications to a central unit or another transceiver. The central unit or other transceiver may respond with information indicating phase shifts or delays to be applied to the transmitted signals to synchronize the transmissions with respect to other transmissions that the transceiver is receiving.

[0279] A similar type of feedback may be used to optimize either or both transmitter and receiver parameters. FIG. **33** shows a process for calibrating weights in a multi-user detector (not shown), such as a canceller or constellation processor. A first step **310** involves determining the values of received signals during normal transmissions. This is performed by a cancellation and/or constellation method. A second step **311** involves making a decision on whether to initiate recalibration of the processor weights. The decision step **311** is made based on analysis of at least one parameter, such as BER or other diagnostics, established benchmarks, process-control signals, or timers. The decision step may be made based on either internal or external parameters. If one or more predefined conditions are met, an initiation step **312** starts a recalibration sequence. The initiation step **312** may

convey a message to one or more transmitters to initiate calibration, or training sequences may be initiated at predetermined intervals, in which case, the initiation step **312** only involves the receiver preparing itself for calibration.

[**0280**] Known training signals are received in a receiving step **313**, which is followed by an optimization step **314**. In the optimization step **314**, an optimization technique (defined previously) is used to adjust the weights based on one or more criteria that are balanced or optimized.

[**0281**] A looped optimization process is shown in FIG. **34**. Values of received signals are determined in a first step **310**. A decision step **315** may involve making a decision on which parameter to adjust on either or both the receiver and a remote transmitter, and how to adjust the parameter (e.g., magnitude and/or direction). The decision step **315** may make a decision to break out of the loop and return to a data transmission/reception mode. The decision step **315** is followed by a parameter-adjustment step **316** in which one or more parameters are adjusted, or control signals are generated that result in parameter adjustment. Control may be returned to the first step **310**.

[**0282**] Training sequencers may be used in transmitters to transmit training sequences consisting of predetermined signals. The training sequences are processed by receivers (as described in FIG. **33** and FIG. **34**) to adjust weights applied to received signals. Weights are applied to optimize the desired signal. The optimization process may be performed with respect to signal-to-noise, signal-to-interference, signal-to-noise-plus-interference, bit-error rate, or any type of measurement or computation that indicates signal quality. A training sequence may be transmitted in a parallel channel, or the training sequence may be part of a received signal. For example, amplitude measurements of a constant-modulus signal may be regarded as a training sequence. The optimization process may be performed by either or both transmitters and receivers. In open-loop processing, a transceiver analyzes received signals and adjusts its transmissions to compensate for the channel. A closed-loop process involves feedback between a receiver and a transmitter. The closed-loop approach is more robust to changes in the propagation medium.

[**0283**] FIG. **35** illustrates a method of adjusting reception parameters and assigning transmissions to signal spaces in order to optimize system-operating parameters. Signals are received in a first step **295**. The signals may be information or training signals. The spatial gain(s) of the received signals are determined in a measurement step **296**. Signal parameters are optimized in an optimization step **297**. The optimization step **297** includes optimizing signal parameters (such as SNR, signal power, and BER). A second optimization step **298** includes distributing signals into optimized signal spaces. The optimization is based on system parameters (such as power efficiency and system complexity).

[**0284**] Although the signal space shown in FIG. **32** has only two dimensions, signal spaces may have three or more dimensions. Signal-space axes may include any diversity parameter or combination, including differential-modulation dimensions. Although differential ASK is shown, any type of differential modulation scheme may be used including hybrid schemes that combine different types of modulation schemes in at least one form of differential modulation.

[**0285**] Multiple forms of diversity may be included in the communication systems described in this specification. These forms of diversity may be used for either or both signal enhancement and capacity increases. Each diversity parameter may be dedicated to one particular use of diversity, or the diversity parameters may be adjusted to provide an optimal combination of both signal-enhancement benefits and capacity improvements. In cancellation and constellation systems, the number of samples representing linear and nonlinear combinations of unknown signals is increased by providing additional diversity dimensions. One example shown in the specification describes an addition of spatially separated frequency-diversity cancellation systems. However, many other types of diversity-parameter combining may be used to increase the number of algebraically unique combinations of unknown signals or to improve signal quality.

[**0286**] A benefit of generating more samples of unknown signals in a cancellation system includes enabling the values of the unknowns to be determined explicitly. In a constellation system, generating more samples improves the BER of the decision processes. A benefit of constellation methods is that they can be used to obtain signal estimates without the hardware and processing requirements of cancellation methods. A constellation system is scalable to increased numbers of unknowns. Under high demand, a constellation system (like quasi-orthogonal CDMA) enables a graceful degradation of signal quality resulting from increased higher BER. Constellation processing may also be performed in addition to cancellation processing to help determine processing accuracy and to indicate when recalibration is necessary.

[**0287**] In the preferred embodiments, several kinds of interferometry multiplexing are demonstrated to provide a basic understanding of diversity reception and spatial demultiplexing. With respect to this understanding, many aspects of this invention may vary. For example, signal spaces and diversity parameters may include redundantly modulated signal spaces. The antenna arrays may be arrays of individual antennas, a lens system, or a multiple-feed single-dish antenna where each feed is considered to be an individual antenna element. Although only two- and three-element cancellers are shown, cancellation processes may be performed on a larger number of inputs. The complexity of the cancellation process typically increases for larger numbers of inputs. A CPU may be used to perform the weight-and-sum operations or equivalent types of cancellation processes that result in separation of the signals. Although the wireless interface in the invention is described with regard to RF and microwave frequencies, the principles of operation of the invention apply to any frequency in the electromagnetic spectrum. Additionally, a demultiplexer may include combinations of space, frequency, time, phase space, mode, code, and polarization-diversity combining methods. Furthermore, constant-modulus signals may be transmitted in the communication system. Constant-modulus transmissions can simplify the demultiplexing of received signals. In this regard, it should be understood that such variations as well as other variations fall within the scope of the present invention, its essence lying more fundamentally with the design realizations and discoveries achieved than merely the particular designs developed.

[**0288**] This invention claims the methods of controlling signal parameters in multiple diversity dimensions to achieve specific signal processing capabilities (such as diversity benefits and capacity enhancement) in other diver-

sity dimensions. For example, PCT Pat. Appl. No. WO99/41871 describes how different-frequency carriers transmitted from different spatial locations cause a time-varying superposition beam pattern (and a time-varying spatial gain distribution). This enables time-domain processing to yield either or both diversity and capacity benefits.

[0289] The foregoing discussion and the claims that follow describe the preferred embodiments of the present invention. With respect to the claims, it should be understood that changes could be made without departing from the essence of the invention. To the extent such changes embody the essence of the present invention, each naturally falls within the breadth of protection encompassed by this patent. This is particularly true for the present invention because its basic concepts and understandings are fundamental in nature and can be broadly applied.

1. A multicarrier receiver, comprising:

a sampler configured for sampling a plurality of received multicarrier signals to produce a plurality of multicarrier signal values,

a combiner configured for combining the plurality of multicarrier signal values to produce at least one information signal and at least one interference signal, and

a multi-user detector configured to separate the at least one information signal from the at least one interference signal.

2. The multicarrier receiver recited in claim 1, wherein the sampler comprises a filter bank.

3. The multicarrier receiver recited in claim 1, wherein the combiner is adapted to reconstruct time-domain signals occurring in a plurality of time intervals.

4. The multicarrier receiver recited in claim 1, wherein the multi-user detector comprises a phase-space decoder.

5. The multicarrier receiver recited in claim 1, wherein the plurality of received multicarrier signals comprises at least one multicarrier frequency-hopped signal, and the sampler is configured to sample the at least one multicarrier frequency-hopped signal.

6. A method of receiving a multicarrier signal, comprising:

providing for sampling a plurality of received multicarrier signals to produce a plurality of multicarrier signal values,

providing for combining the plurality of multicarrier signal values to produce at least one information signal and at least one interference signal, and

providing for performing multi-user detection to separate the at least one information signal from the at least one interference signal.

7. The method recited in claim 6, wherein providing for sampling comprises filtering.

8. The method recited in claim 6, wherein providing for combining comprises reconstructing time-domain signals occurring in a plurality of time intervals.

9. The method recited in claim 6, wherein providing for performing multi-user detection comprises performing phase-space decoding.

10. The method recited in claim 6, wherein the plurality of received multicarrier signals comprises at least one multicarrier frequency-hopped signal, and providing for sampling is configured to sample the at least one multicarrier frequency-hopped signal.

11. A system, comprising:

a sampling means configured for sampling a plurality of received multicarrier signals to produce a plurality of multicarrier signal values,

a combining means configured for combining the plurality of multicarrier signal values to produce at least one information signal and at least one interference signal, and

a multi-user detection means configured to separate the at least one information signal from the at least one interference signal.

12. The system recited in claim 11, wherein the sampling means comprises a filter bank.

13. The system recited in claim 11, wherein the combining means is adapted to reconstruct time-domain signals occurring in a plurality of time intervals.

14. The system recited in claim 11, wherein the multi-user detection means comprises a phase-space decoder.

15. The system recited in claim 11, wherein the plurality of received multicarrier signals comprises at least one multicarrier frequency-hopped signal, and the sampling means is configured to sample the at least one multicarrier frequency-hopped signal.

* * * * *