Oct. 24, 1961 L. DREZNER ET AL 3,005,612

MOUNTING MEANS FOR FURNITURE LEG

Filed Sept. 15, 1960

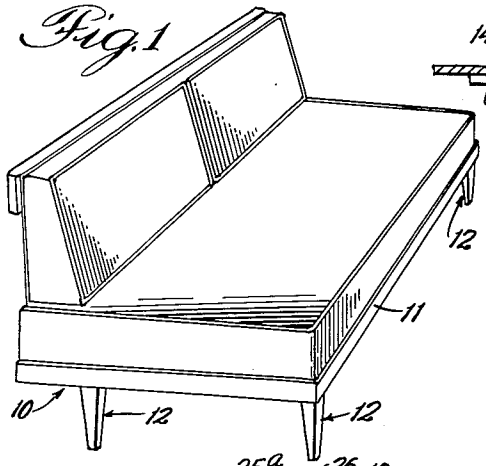

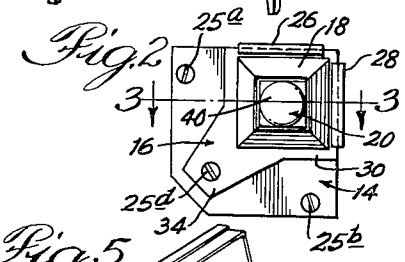

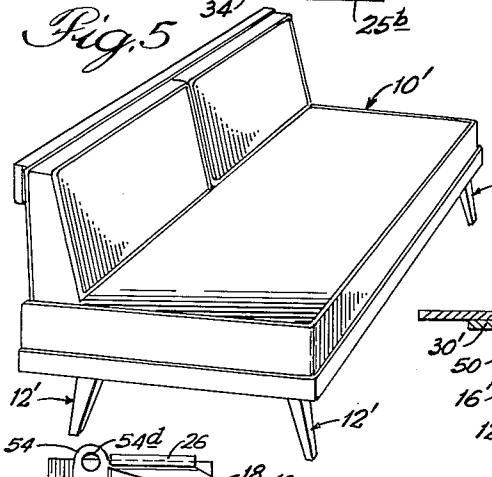

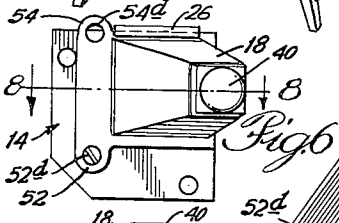

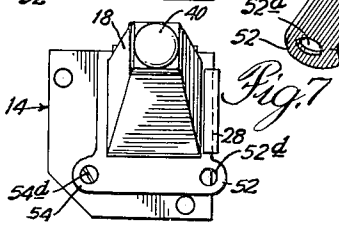

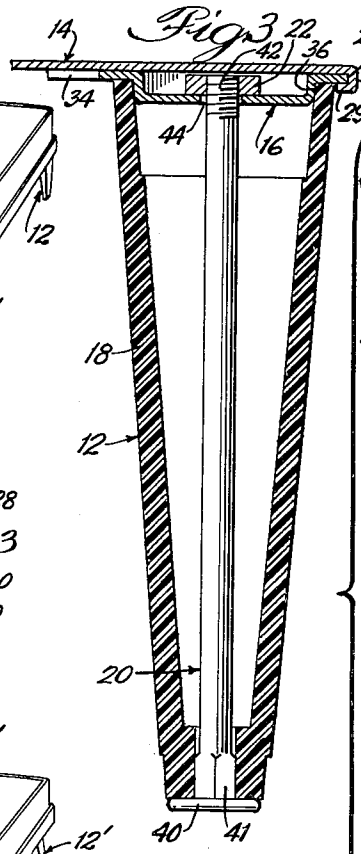

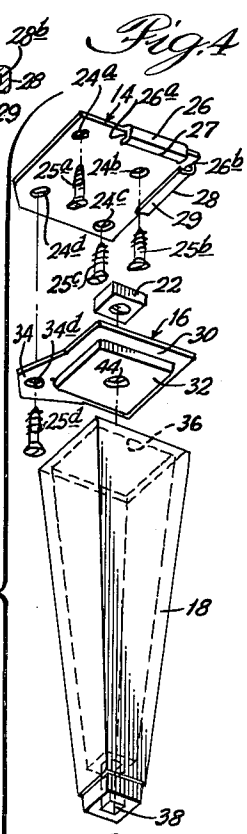

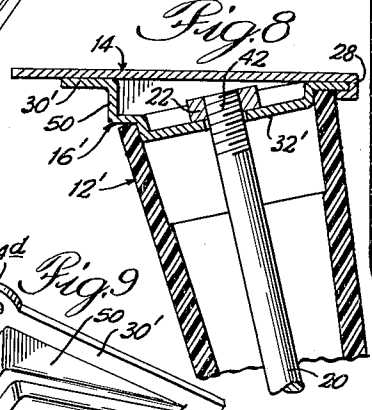

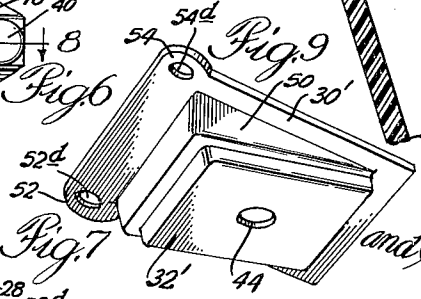

INVENTORS:
Lee Drezner
and Selig H. Drezner,

BY Bair, Freeman & Molinare
ATTORNEYS.

United States Patent Office 3,005,612 Patented Oct. 24, 1961

3,005,612

MOUNTING MEANS FOR FURNITURE LEG

Lee Drezner, 4731 N. Keating Ave., Chicago, Ill., and Selig H. Drezner, 4251 Jarvis Ave., Lincolnwood, Ill.

Filed Sept. 15, 1960, Ser. No. 56,213
4 Claims. (Cl. 248—188)

This invention relates to a furniture leg construction and more particularly relates to a simplified mounting means for securing a leg construction to a piece of furniture or the like.

Furniture legs that have been moulded of plastic and the like have achieved rather large popularity in recent years because of their relative inexpensiveness of construction. The mounting means for fastening such moulded legs to a piece of furniture has, however, heretofore provided certain problems of insuring rigid connections between the leg and the mounting means and between the mounting means and the furniture piece. Previous attempts to provide leg mounting means that insure adequate rigidity have been relatively complex and relatively costly.

Thus, one object of this invention is to provide a furniture leg and mounting means therefor which cooperate to provide very rigid connections between the leg and the mounting means and between the mounting means and the furniture piece to which the leg connects.

Another object of this invention is to provide a furniture leg and mounting means therefor which provides for very rigid connections with a furniture piece to which the leg connects and which is characterized by simplicity and efficiency of design and by relative inexpensiveness of construction.

In the invention herein there is provided a hollow moulded leg to which a leg plate is rigidly secured, and a base plate that is adapted to be rigidly secured to a furniture piece, and simple complementary means are provided on the leg plate and base plate for effecting a rigid connection between said plates, whereby to rigidly secure the leg to the furniture piece.

Thus, still another object of this invention is to provide a simplified leg construction and mounting means therefor which includes a leg-mounted plate and a furniture-mounted plate that have complementary means thereon for effecting a rigid connection between said plates with the use of but a single selectively operable connector.

And a further object of this invention is to provide a furniture leg and rigid mounting means therefor that is particularly adaptable for use with moulded legs that are to be selectively used for either upright-leg installations or inclined-leg installations.

Further objects and advantages of this invention will become apparent as the following description proceeds and the features of novelty which characterize this invention will be pointed out with particularity in the claims annexed to and forming part of this specification.

A preferred embodiment of the invention is shown in the accompanying drawings, in which:

FIGURE 1 is a perspective view of a furniture piece that is provided with one form of the novel furniture leg and mounting means therefor that is the subject of this application for patent;

FIGURE 2 is a bottom plan view of a typical leg mounting used on the furniture piece of FIGURE 1;

FIGURE 3 is an enlarged vertical cross-section view taken on line 3—3 of FIGURE 2;

FIGURE 4 is a perspective, reduced, exploded view of the device of FIGURES 2 and 3;

FIGURE 5 is a view similar to FIGURE 1 showing a furniture piece provided with an inclined leg construction and embodying the novel features of construction disclosed in the first form of device of FIGURES 1–4;

FIGURE 6 is a bottom plan view of an inclined leg construction showing the leg inclined in one plane;

FIGURE 7 is a view similar to FIGURE 6 but showing the same construction of FIGURE 6 rearranged so that the leg inclines in a different plane;

FIGURE 8 is a fragmentary enlarged cross-section taken substantially on line 8—8 of FIGURE 6; and

FIGURE 9 is a perspective view of the leg plate used in the form of device shown in FIGURES 5–8.

Referring now to the drawings, there is illustrated in FIGURE 1 a piece of furniture that is adapted to be supported by legs constructed in accordance with this invention. More specifically, there is shown a sofa **10** having a base **11**, of wood or the like, to the underside of which connect a plurality of support leg assemblies **12**. Each support leg assembly construction includes, as best seen in FIGURES 2–4, a base plate generally indicated at **14** and adapted for connection to the body to be supported, a leg plate generally indicated at **16** and adapted to abut plate **14**, a hollow leg **18**, an assembly bolt **20**, and a nut **22**.

More specifically, and as best seen in FIGURE 4, the base plate **14** is a generally planar part, of sheet metal or the like, that is adapted for direct connection by any appropriate means to the underside of the piece of furniture to which the leg is to attach. The base plate **14** may, for example, be provided with apertures **24***a*, **24***b*, **24***c* and **24***d*, through which corresponding connectors are adapted to extend. In the instant construction, countersunk screws **25***a*, **25***b* and **25***c* are provided for extending respectively through respective apertures and for connecting the base plate **14** to the piece of furniture.

The base plate **14** is formed on two adjacent transverse edges thereof with tabs **26** and **28** which are shaped to define a pair of recesses **26***a* and **26***b* that open in a pair of directions transverse to each other and which are of a height slightly greater than the thickness of the material of the leg plate **16**, so that edge portions of the leg plate **16** may be slidably received into recesses **26***a* and **26***b*. The tabs **26** and **28** cooperate to limit sliding movement of the plates **14** and **16** relative to each other in a first pair of directions transverse to each other. The extended ends of tabs **26** and **28** are bent inwardly to define flanges **27** and **29** that are spaced from the planar portion of base plate **14**, and thereby form a restraint which prevents the leg plate **16** pulling away from the base plate **14** when the parts are assembled together, as shown in FIGURE 3.

The leg plate **16** is shaped to define a flat peripheral portion **30**, that is adapted to abut the base plate **14**, and a central, downwardly dished, portion **32**. A part of the peripheral portion **30** is enlarged as at **34** and is provided with an aperture **34***d* that is adapted to be aligned with aperture **24***d* to provide for passage therethrough of a selectively operable screw connector **25***d*. The single connector **25***d* provides restraints against sliding movement between the leg plate and base plate in directions directly opposite to the directions in which sliding movement is restrained by tabs **26** and **28**, and, at the same time, screw **25***d* helps to restrain leg plate **16** from pulling away from base plate **14**. The screw **25***d* is preferably located substantially on the bisector of the included angle between the pair of directions in which the recesses **26***a* and **26***b* open.

The leg **18** is a hollow leg that is preferably molded of a plastic material or the like, and has a downwardly tapering exterior periphery that may be of any exterior periphery in cross-section. Although the leg shown has a generally square exterior periphery, it will be understood

that the exterior periphery may be round, or oval, or any preferred shape. The leg **18** is provided at its upper end with an upper internal recess, or socket, **36** that is of a non-circular periphery, and with a lower internal recess, or socket, **38** at the lower end which also is of a non-circular periphery. The downwardly dished portion **32** of leg plate **16** is provided with a non-circular periphery that is complementary with the non-circular periphery of upper recess **36**, so that the leg **18** will receive the dished portion **32** thereinto in the manner as seen in FIGURE 3, thereby providing cooperating means which prevent rotation of the leg relative to the leg plate.

The assembly bolt **20** is an elongated member that extends axially of leg **18** and is substantially coextensive with the entire height of the leg **18**. Bolt **20** is provided with a head **40** and a non-circular shank portion **41** immediately adjacent the head **40**. The shank portion **41** has a shape complementary with the lower, non-circular recess **38** so that the assembly bolt **20** is received in leg **18** in non-rotative association therewith, thereby affording assembly of leg plate **16** to leg **18**. The threaded tip **42** of bolt **20** extends upwardly through a central aperture **44** in leg plate **18** and has the nut **22** connected thereto to clamp the leg plate **16** to the leg **18**. The length of bolt **20** is such that the upper end thereof is spaced from base plate **14** to prevent interference of parts in the final assembly.

Now, with the leg plate **16** assembled on the leg **18**, and with the base plate secured to a piece of furniture by means of screws **25***a*, **25***b* and **25***c*, the dimensions of the leg plate **16** are such that edge portions extend laterally outwardly of the upper end of leg **18**, thereby providing portions which will slidably fit into recesses **26***a* and **26***b*, thereby providing pre-formed positioning means on the base plate **14** and leg plate **16** which operate to provide the restraints against relative sliding movement as hereinabove referred to. With the plates thus abutting each other, the apertures **34***d* and **24***d* will be in register and then, by simply connecting the single connector screw **25***d*, to the piece of furniture, the plates **14** and **16** are clamped together and the leg is securely connected to the furniture part.

The head **40** of assembly bolt **20** may be provided with any suitable anti-scuff means, such as felt pad or the like, in a manner that is well-known in the art. A rubber grommet-type member may be provided having a connecting flange clamped between the bolt head **40** and the lower terminus of leg **18**.

In the second form of construction shown in FIGURES 5–8, parts similar to those described hereinabove are given the same reference numerals. In FIGURE 5, a sofa **10'** is provided with inclined support legs **12'**. The inclined leg assembly **12'** includes a base plate **14**, a leg plate **16'**, a leg **18**, an assembly bolt **20**, and a nut **22**. The leg plate **16'** is the only part that differs from the first form of construction. Plate **16'** is provided with a dished portion **32'** which enters the upper recess of hollow leg **18** in the same manner as disclosed with regard to FIGURES 1–4. The leg plate **16'** has a flat peripheral portion **30'** adapted to abut base plate **14** and which is separated from dished portion **32'** by a wedge-shaped intermediate section **50**, which serves to dispose the dished portion **32'** in a plane that is inclined with respect to the plane of the peripheral portion **30'**. This arrangement serves to incline the leg **18** relative to the base plate **14** to which the leg is to connect.

The peripheral plate portion **30'** is also provided with enlarged ears **52** and **54** having apertures **52***d* and **54***d* therein, respectively. By aligning one of the apertures **52***d* or **54***d* with the aperture **24***d* in base plate **14**, the leg **18** may be selectively caused to incline either in the direction shown in FIGURE 6 or in the direction shown in FIGURE 7. The latter construction provides versatility with a single construction.

It will be understood that plates **14**, **16** and **16'** may be stamped in simple operations and the other parts are simple to obtain or fabricate. The leg construction of this invention thus provides simplicity and economy and ease in installation.

While there has been shown and described a particular embodiment of this invention, it will be obvious to those skilled in the art that various changes and modifications may be made therein without departing from the invention and, therefore, it is intended in the appended claims to cover all such changes and modifications as fall within the true spirit and scope of the invention.

Although the instant disclosure particularly shows use of a hollow leg in combination with the base plate and leg plate mounting means, it will be understood that the base plate and leg plate mounting means may be successfully used with other types of legs, including solid legs. In the latter arrangement any appropriate means is used to first secure the leg plate to the leg and thereafter the plates are joined together as described hereinabove.

What we claim as new, and desire to secure by Letters Patent of the United States is:

1. A leg construction comprising, in combination: a base plate adapted for connection to a body to be supported, a leg plate abutting said base plate, pre-formed positioning means on said base plate and leg plate providing restraints for maintaining the leg plate and base plate in abutting relation and for limiting sliding movement between said leg plate and base plate in a first pair of directions transverse to each other, a selectively operable connector extending through said leg plate and base plate for securing said plates together, said connector providing restraint against sliding movement between said leg plate and base plate in a second pair of directions that are directly opposite to said first pair of directions, an elongated leg having a recess of non-circular periphery at one end thereof, said leg plate having a downwardly dished portion whose periphery is complementary with the non-circular periphery of the recess in said leg, the dished portion of the leg plate entering said leg and cooperating therewith to prevent rotation of the leg relative to said leg plate, and attachment means, including a part disposed between the leg plate and the base plate, carried by said leg and engaging the dished portion of the leg plate to secure the leg to the leg plate.

2. A leg construction comprising, in combination: a base plate adapted for connection to a body to be supported, a leg plate abutting said base plate, pre-formed positioning means on said base plate and leg plate providing restraints for maintaining the leg plate and base plate in abutting relation and for limiting sliding movement between said leg plate and base plate in a first pair of directions transverse to each other, a selectively operable connector extending through said leg plate and base plate for securing said plates together, said connector providing restraint against sliding movement between said leg plate and base plate in a second pair of directions that are directly opposite to said first pair of directions, an elongated leg attached at one end to said leg plate, said leg having a recess of non-circular periphery at its attached end, said leg plate having a downwardly dished portion whose periphery is complementary with the non-circular periphery of the recess in said leg, the dished portion of the leg plate entering said leg and cooperating therewith to prevent rotation of the leg relative to said leg plate, and the said dished portion of the leg plate which enters said leg being disposed in a plane that is inclined with respect to the portions of the leg plate abutting the base plate, so as to provide an inclined leg construction.

3. A leg construction comprising, in combination: a base plate adapted for connection to a body to be supported, a leg plate abutting said base plate, pre-formed positioning means on said base plate and leg plate providing restraints for maintaining the leg plate and base plate in abutting relation and for limiting sliding movement between said leg plate and base plate in a first pair of directions transverse to each other, a selectively oper-

able connector extending through said leg plate and base plate for securing said plates together, said connector providing restraint against sliding movement between said leg plate and base plate in a second pair of directions that are directly opposite to said first pair of directions, an elongated leg attached at one end to said leg plate, said leg having a recess of non-circular periphery at its attached end, said leg plate having a downwardly dished portion whose periphery is complementary with the non-circular periphery of the recess in said leg, the dished portion of the leg plate entering said leg and cooperating therewith to prevent rotation of the leg relative to said leg plate, the said dished portion of the leg plate which enters said leg being disposed in a plane that is inclined with respect to the portions of the leg plate abutting the base plate, so as to provide an inclined leg construction, and said leg plate providing a plurality of spaced connector portions each adapted to be positioned to have said selectively operable connector extend therethrough, thereby providing a leg construction that may be positioned to incline in a plurality of selected directions.

4. A leg construction comprising, in combination: a base plate adapted for connection to a body to be supported, a leg plate abutting said base plate, pre-formed positioning means on said base plate and leg plate providing restraints for maintaining the leg plate and base plate in abutting relation and for limiting sliding movement between said leg plate and base plate in a first pair

of directions transverse to each other, a selectively operable connector extending through said leg plate and base plate for securing said plates together, said connector providing restraint against sliding movement between said leg plate and base plate in a second pair of directions that are directly opposite to said first pair of directions, an elongated hollow leg attached at one end to said leg plate, each end of the leg having a non-circular recess therein, said leg plate having a peripheral abutment flange and downwardly dished central portion whose periphery is complementary with the periphery of the non-circular recess in said attached end of said leg, said dished portion of the leg plate having a central aperture, an elongated assembly bolt having a non-circular portion entering the complementary non-circular recess at the other end of the leg, the bolt extending axially of the leg and through the said central aperture in the leg plate, and a clamping nut on said bolt located within said dished portion of the leg plate, so as to be located axially below the plane of said peripheral abutment flange.

References Cited in the file of this patent

UNITED STATES PATENTS

1,030,658	Gregory	June 25, 1912
2,639,956	Jacobson	May 26, 1953
2,738,246	Hogan	Mar. 13, 1956
2,784,930	Wernecke	Mar. 12, 1957
2,869,950	Boccone	Jan. 20, 1959