United States Patent [19]

Sachko

[11] **3,845,881**

[45] **Nov. 5, 1974**

[54] **LIGHTED-CIGARETTE DISPENSING MACHINE**

[76] Inventor: **William R. Sachko,** 348 Sienega Dr., Fullerton, Calif. 92635

[22] Filed: **July 18, 1973**

[21] Appl. No.: **380,324**

[52] **U.S. Cl.** **221/144**

[51] **Int. Cl.** **B65d 83/00**

[58] **Field of Search** 221/136, 143–149, 221/15, 81, 83–86, 90, 91; 198/24, 106; 131/94

[56] **References Cited**

UNITED STATES PATENTS

496,730	5/1893	Foote	221/83
1,526,564	2/1925	Prather	221/147
2,936,930	5/1960	Rott et al.	221/15
3,368,715	2/1968	Beha et al.	221/147

FOREIGN PATENTS OR APPLICATIONS

1,483,895	5/1967	France	221/143

Primary Examiner—Robert B. Reeves
Assistant Examiner—H. Grant Skaggs, Jr.
Attorney, Agent, or Firm—Nilsson, Robbins, Bissell, Dalgarn & Berliner

[57] **ABSTRACT**

A unit is disclosed for dispensing lighted cigarettes as for use in an automotive vehicle. A plurality of cigarettes are carried in a magazine which rotates to laterally deliver individual cigarettes to a transport mechanism. Both the magazine and the transport mechanism, as disclosed, are actuated by a lever motion. A cigarette provided to the transport mechanism is carried along an axial path to abut an energized heating element. With the cigarette positioned adjacent the heating element, a timing or lever return structure actuates a pump to provide an air current for effectively lighting the cigarette. Another element of the return structure then operates in sequence to release the cigarette for delivery to the consumer.

5 Claims, 4 Drawing Figures

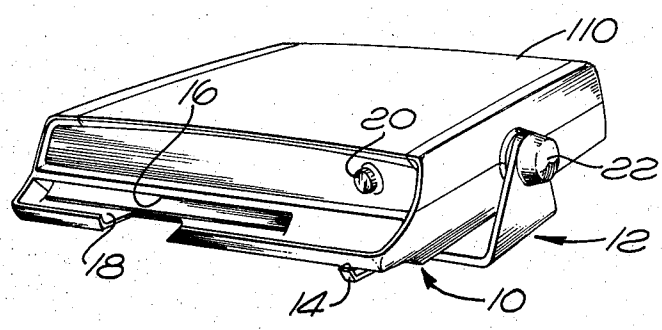

FIG. 1.

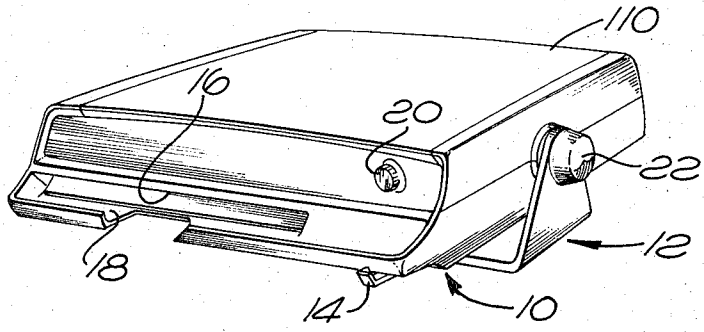
110
16
20
22
12
18
14
10

FIG. 3.

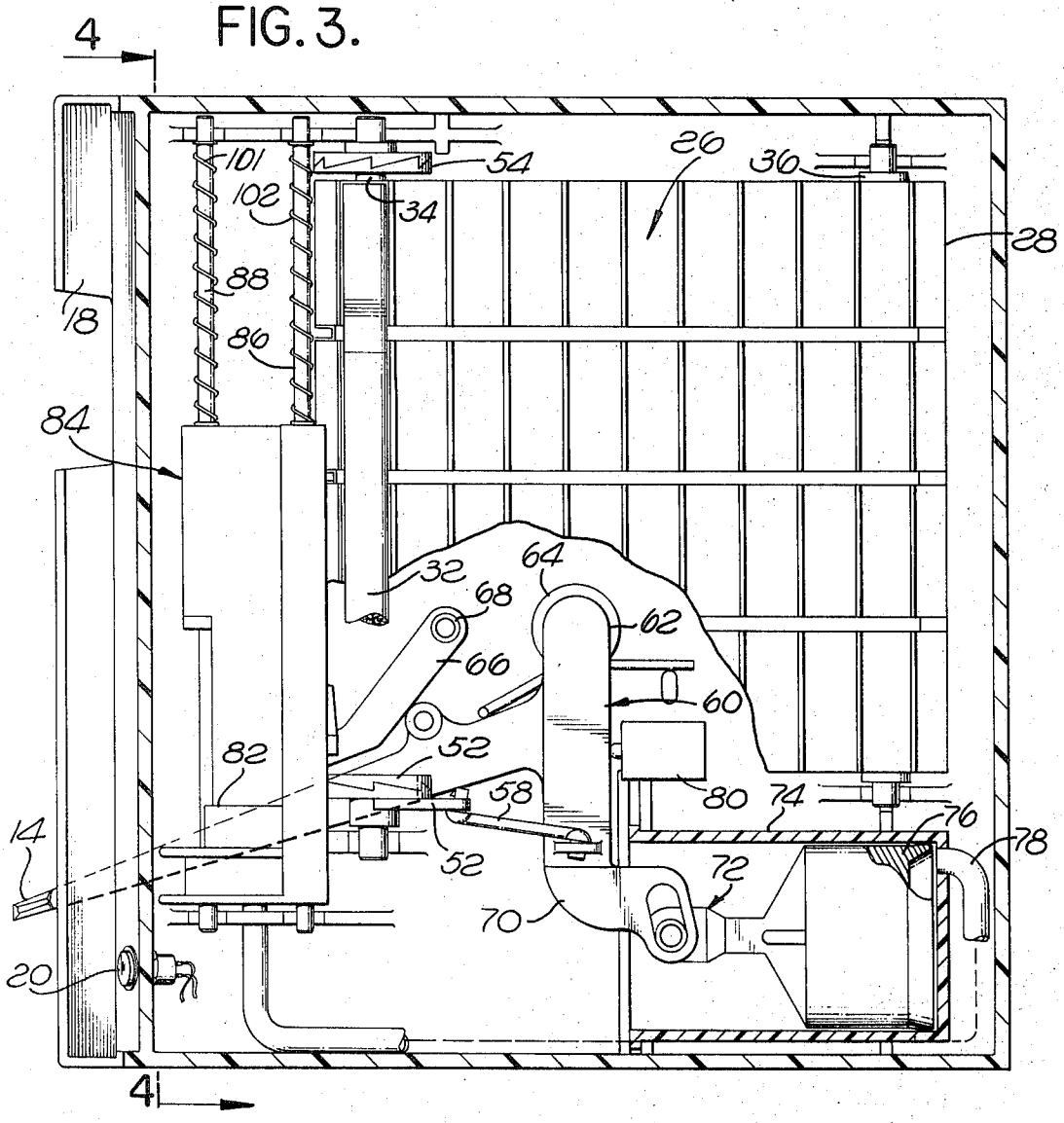
4
101
102
54
34
26
30
28
88
18
86
84
32
64
68
62
66
60
52
82
58
80
74
76
78
14
52
72
70
20
4

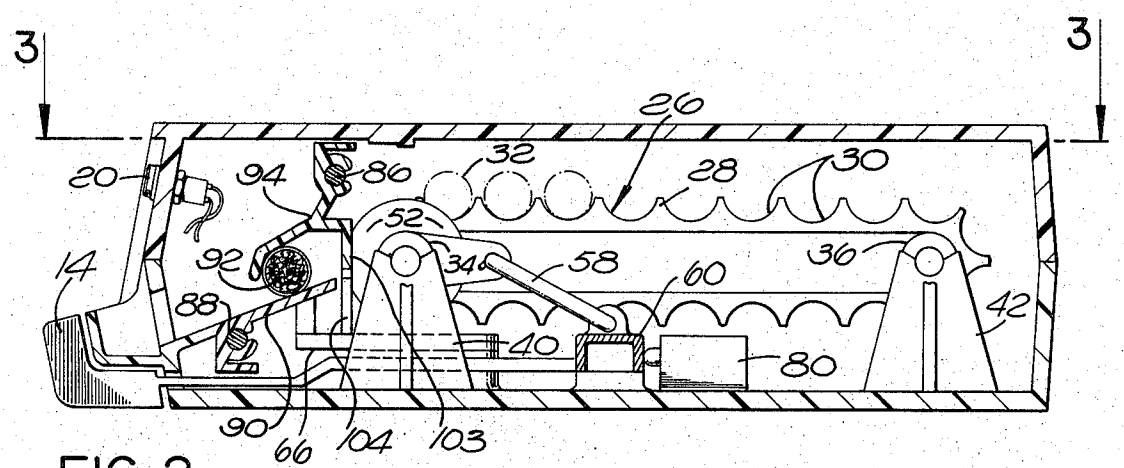
3
3
26
20
94
86
32
28
30
52
14
92
34
58
60
36
88
42
40
80
90
66
104
103

FIG. 2.

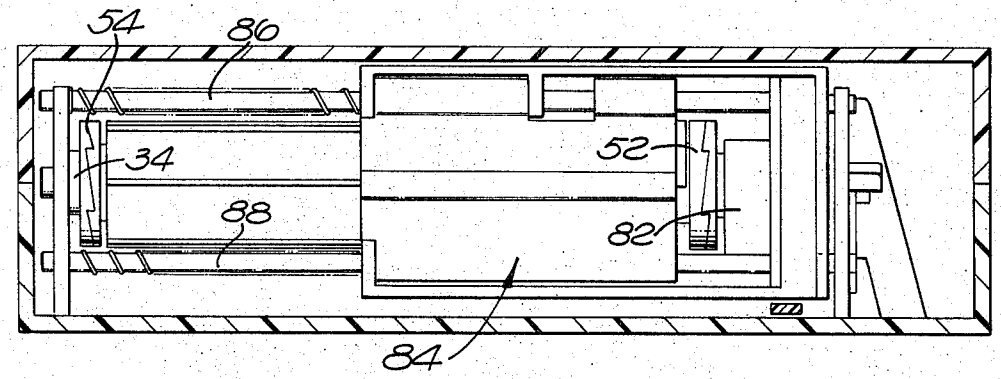
54
86
34
52
88
82
84

FIG. 4.

LIGHTED-CIGARETTE DISPENSING MACHINE

BACKGROUND AND SUMMARY OF THE INVENTION

It is readily apparent that a person smoking a cigarette is required to give a certain amount of his attention to handling the cigarette. Consequently, it is also apparent that a person who smokes while driving an automobile is diverted to some extent from routine as well as possible emergency driving activities.

In that regard, it is significant that the specific activity of smoking which usually commands the greatest attention by the smoker occurs in the course of lighting the cigarette. These, and similar considerations of safety and convenience, have resulted in a prior recognition of the need for a dispenser to deliver burning or lighted cigarettes. Of course, the use of such appliances in road vehicles is merely illustrative and in that regard it will be apparent that many other applications exist.

The recognized need for an appliance as considered above has resulted in a multiplicity of structural proposals. Specifically, for example, structures as disclosed in the following U.S. Pat. Nos. have been proposed with the objective of solving the problem:

1,526,564	1,994,712
1,796,657	2,028,787
1,800,140	2,132,771
1,802,629	2,182,955
1,813,312	2,471,820
1,823,609	2,595,512
1,912,779	2,732,973
1,967,663	

Recognizing that numerous structures have been proposed in the past, as indicated above, for dispensing burning cigarettes, such structures generally have not come into widespread use. In that regard, the various prior structures usually have involved such attendant disadvantages as relatively high cost, frequent operating damage to cigarettes, tendencies to jam, unreliable operation and so on. As a consequence, a need continues to exist for an economical, reliable and durable appliance for safely dispensing lighted cigarettes ready for use. In general, the present invention is directed to such a structure.

BRIEF DESCRIPTION OF THE DRAWING

In the drawing, which constitutes a part of this specification, an exemplary embodiment demonstrating various objectives and features hereof is set forth as follows:

FIG. **1** is a perspective view of an appliance or dispenser unit constructed in accordance with the present invention;

FIG. **2** is a vertical sectional view taken somewhat centrally through the structure of FIG. **1**;

FIG. **3** is a fragmentary sectional view taken along a line **3—3** of FIG. **2**; and

FIG. **4** is a fragmentary sectional view taken along a line **4—4** of Flg. **3**.

DESCRIPTION OF THE ILLUSTRATIVE EMBODIMENT

As required, a detailed illustrative embodiment of the invention is disclosed herein. The embodiment, although deemed to be the best embodiment for present

purposes and as currently contemplated, is to be recognized as exemplary. Also, it is to be recognized that the present invention may be constructed in various other forms, some of which may be quite different from the disclosed illustrative embodiment. However, the specific structural and functional details disclosed herein are deemed to be merely representative and in that regard provide a basis for the claims herein which define the scope of the invention.

Referring initially to FIG. **1**, an appliance is shown embodied in a somewhat parallelepiped housing **10** supported on a mounting yoke **12.** A lever arm **14** extends from the forward portion of the housing **10** and is manually actuable for movement to the left in a power, starting stroke to initiate a sequence of events within the structure to deliver a burning cigarette. Specifically, upon movement of the arm **14** to the left with an actuating stroke, a cigarette is taken from a magazine within the housing **10,** transported to an igniting element and subsequently delivered through the aperture **16** to a holding trough **18.** During the igniting or lighting operation, a lamp **20** is energized to provide a visual signal, indicating that the unit is currently operative to deliver a cigarette.

Recognizing that the illustrative embodiment is simply exemplary, the housing **10** may be fabricated of plastic and is adjustably supported on the yoke **12** by thread-bearing knobs **22.** The yoke **12** may carry a pressure-sensitive adhesive on the underside (not shown) for convenient mounting, as on the dashboard of an automobile or truck. Thus embodied, the unit is compact, convenient and attractive.

Considering the operating components of the unit of FIG. **1** in somewhat greater detail, reference will now be made to FIGS. **2, 3** and **4** showing the internal structure of the housing **10.** A magazine **26** (FIGS. **2** and **3**) includes a belt structure **28** defining an aligned plurality of semi-cylindrical exposed grooves or slots **30** (FIG. **2**) for receiving individual cigarettes, e.g., cigarettes **32.**

The belt structure **28** is supported on cylindrical shafts or rollers **34** and **36** (FIG. **3**) which in turn are supported on bearings contained in terminal posts **40** and **42** (FIG. **2**). The shaft or roller **34** (FIGS. **3** and **4**) is mounted on jaw clutches for stepped motion of the belt to deliver individual cigarettes. Specifically, adjacent the right end (FIG. **4**) of the roller **34,** a drive jaw clutch **52** is provided for advancing the roller in a counterclockwise direction as viewed in FIG. **2.** At the opposed end of the roller **34** (FIG. **4**) an oppositely oriented ratchet jaw clutch **54** locks the roller **34** against return or clockwise motion opposed to that indicated above.

The drive jaw clutch **52** is actuated through a radial arm **56** (FIG. **3**) which is coupled by a linkage **58** to a bell crank **60,** the actuating arm of which comprises the lever **14** and is employed to initiate the sequence of operations resulting in the delivery of a burning cigarette. Thus, the delivery operations are motivated by displacing the lever **14.**

The bell crank **60** is supported on a pivot **62** and urged counterclockwise (FIG. **3**) by a torsion spring **64.** The actuating arm or lever **14** of the bell crank engages a transport-drive lever **66** which is supported at a pivot **68,** the pivot containing a spring (not shown) for urging the transport-drive lever **66** to the lower position, as indicated.

The load arm **70** of the bell crank **60** is coupled to the linkage **58** and additionally connected to a piston structure **72** which is reciprocally mounted in a compression chamber **74.** The piston structure **72** incorporates a seal **76** for engaging the walls of the chamber **74** so that during a downstroke of the piston **72** air is forced through a tube **78.**

In addition to the other functions indicated above, the bell crank **60** also actuates an electrical switch **80** which serves to control the delivery of electrical current to a resistance heating element **82** and the lamp **20** (FIG. **2**). Generally, the switch **80** may comprise any of a variety of small switches for closing an electrical circuit through the lamp **20** and the element **82** at a time when the arm **70** moves from the switch **80.** Thus, component operating parts are powered and sequenced somewhat by the actuation of the lever **14.**

The electrical resistance element **82,** in addition to receiving electrical current as indicated above, also axially receives a stream of air through the tube **78.** Accordingly, the end or tip of a cigarette placed in contiguous alignment with the element **82** is effectively ignited by heat and an air stream from the element **82.**

Cigarettes are carried from the magazine **26** to be ignited by the element **82,** by a transport mechanism **84** (FIGS. **3** and **4**). Specifically, the mechanism **84** is supported on a pair of rails **86** and **88** (FIGS. **2, 3** and **4**) for sliding motion between alignment with the magazine **26** and a position adjacent the element **82** (as illustrated). The transport mechanism **84** includes a sloping platform **90** (FIG. **2**) for supporting an individual cigarette, e.g., cigarette **92** and a swinging retainer **94** the weight of which retains the cigarette **92** in the position as indicated in FIG. **2.** After ignition, a cigarette is permitted to roll away from the element **82.**

Recapitulating, as the lever **14** (Flg. **3**) is moved (left or upward as depicted) the transport mechanism **84** is aligned to receive a cigarette **32,** after which the mechanism is released when the transport lever **66** disengages. The springs **101** and **102** then move the transport lever (right or downward as depicted) to bring the cigarette into contact with the resistance element **82.**

When the transport mechanism **84** is released, the lever **14** has not completed a power stroke. The remaining portion of that stroke fully displaces the piston structure **72** and affords a brief contact period of the cigarette **32** with the element **82.** The return stroke of the lever **14** (powered by the spring **64**) actuates the piston structure **72,** and releases the cigarette **32.** In the latter regard, the cigarette retainer **94** (FIG. **2**) includes a cam extension **103** which engages a camming ridge **104** on the lever **66.** Accordingly, the retainer **94** is raised to release the cigarette **32** just as all components return to the quiescent configuration.

Considering the total sequence of operation in greater detail, the unit is initially loaded by raising a friction-fitted cover **110** (FIG. **1**) for access to the slots **30** (FIG. **2**) in the belt structure **28.** As indicated, some 10 cigarettes **32** may be placed in parallel alignment, lying in the slots **28.** It is to be noted that the cigarettes may be of varying lengths and in that regard, the system as disclosed herein is designed to accommodate the case of most unsatisfactory placement of cigarettes from standard short to long sizes. Consequently, random standard sizes of cigarettes may be randomly laid in the grooves **30.** Thereafter, upon closure of the cover **110** the unit is ready for operation to dispense burning cigarettes.

The basic operation involves manual motion of the actuator arm **14** to move the transport mechanism **84** as well as the magazine **26** with the result that a cigarette is transferred from the magazine **26** to the transport mechanism **84.** As indicated above, at the time of such delivery, the transport mechanism **84** returns to place the cigarette contiguous to the resistance heating element **82** which is energized. However, the arm **14** is moved through the remainder of a stroke to provide a brief delay and complete the upstroke of the piston **72.** Subsequently, the actuating arm **14** is released to complete a return stroke, during which it moves at a controlled rate back to the starting position and during the course of which movement it sequences the operations of providing an air stream, releasing the cigarette and deenergizing the electrical resistance heating element **82.** The sequence will now be considered in complete detail.

The initial motion of the arm **14** toward the left as depicted in FIG. **1,** immediately results in displacement of the transport lever **66** and actuation of the switch **80.** As a consequence, the resistance heating element **82** is immediately energized to initiate the flow of current for bringing the temperature to an ignition level. The other immediate action involves the initial movement of the transport mechanism **84** away from the element **82.**

The motion of the transport mechanism **84** continues until the lever **66** reaches a position at which it disengages from the transport **84.** At that point, the jaw clutch **52** (actuated by the linkage **58**) has moved the roller **34** through approximately a **60°** rotation with the result that an individual cigarette has been dropped from the magazine **26** onto the transport **84.**

Subsequent to disengagement of the transport **84** with the lever **66,** the springs **101** and **102** move the transport **84** back to the illustrated position with the result that the individual cigarette carried in the transport is moved to abut the resistance heating element **82.** The individual cigarette is held on the transport **84** by the very light force of weight from the retainer **94.** As a consequence, the cigarette **92** (FIG. **2**) will slide in the transport **84** to accommodate the positional arrangement in which the transport **84** has returned to the quiescent position and the cigarette **92** abuts the heating element **82** (FIG. **3**).

As the resistance element **82** begins to heat the cigarette, the arm **14** of the bell crank **60** (along with the lever **66**) are manually urged to complete the stroke thereby bringing the piston **72** to the top of the chamber **74.** Additionally, the magazine **26** is also advanced preparatory to the next dispensing cycle. When the lever **14** has moved through a full stroke, it reaches a stop and is simply released by the operator. The return motion is driven by the spring **64** (located at the pivot mount **62**) and is regulated to a relatively-slow speed by the piston **72** functioning somewhat in the manner of a dashpot.

As the piston **72** moves through a downward stroke in the chamber **74,** a charge of air is forced through the tube **78** to pass through a central aperture in the heating element **82** carrying heat to the tip of the cigarette on the transport **84.** As a consequence, the cigarette is ignited to a state of sustaining combustion. In the final motion of the arm **14,** as it approaches the quiescent

position, the ridge **104** (FIG. **2**) engages an extension **102** from the retainer **94** raising the retainer **94** with the result that the cigarette **92** is permitted to roll down the platform **90** into the trough **18** (FIG. **1**). Thus, a burning or lighted cigarette is delivered with essentially no attention from the user.

Of course, the structure hereof may be substantially modified; however, certain aspects thereof will be apparent as providing the effective combination as described. Accordingly, the scope hereof shall be deemed to be as set forth in the following claims.

What is claimed is:

1. A lighted-cigarette dispenser comprising:

a magazine means including a rotatable member defining a plurality of slots for receiving a plurality of cigarettes for containing a plurality of cigarettes at separate locations;

a ciagarette carriage means mounted for reciprocal-motion strokes along a path aligned with the axis of a received cigarette carried thereon;

a lighter means for igniting a cigarette;

an actuating means including, a power arm to move said carriage in an initial stroke of reciprocal motion to receive a carried cigarette from said magazine means, and a dash pot mechanism for moving said carriage in a return stroke of reciprocal motion to abut said lighting means then discharge said carried cigarette;

means connecting said actuating means to control energization of said lighting means; and

means connecting said dash pot mechanism to provide an air current to ignite said carried cigarette.

2. A lighted-cigarette dispenser according to claim **1** wherein said magazine means further includes means for supporting said rotatable member for rotation to release said cigarettes.

3. A lighted-cigarette dispenser according to claim **1** wherein said power arm includes a manually-operable member for engageably driving said carriage means.

4. A lighted-cigarette dispenser according to claim **1** wherein said actuating return means includes means for opening said carriage means to release said cigarette to roll therefrom.

5. A lighted-cigarette dispenser according to claim **1** further including a signal light and means for energizing said light concurrently with the energization of said lighting means.

* * * * *