(No Model.)

D. C. ADDICKS.

TOOL FOR APPLYING WIRE STAY LOCKS IN FENCES.

No. 598,132. Patented Feb. 1, 1898.

FIG. 1.

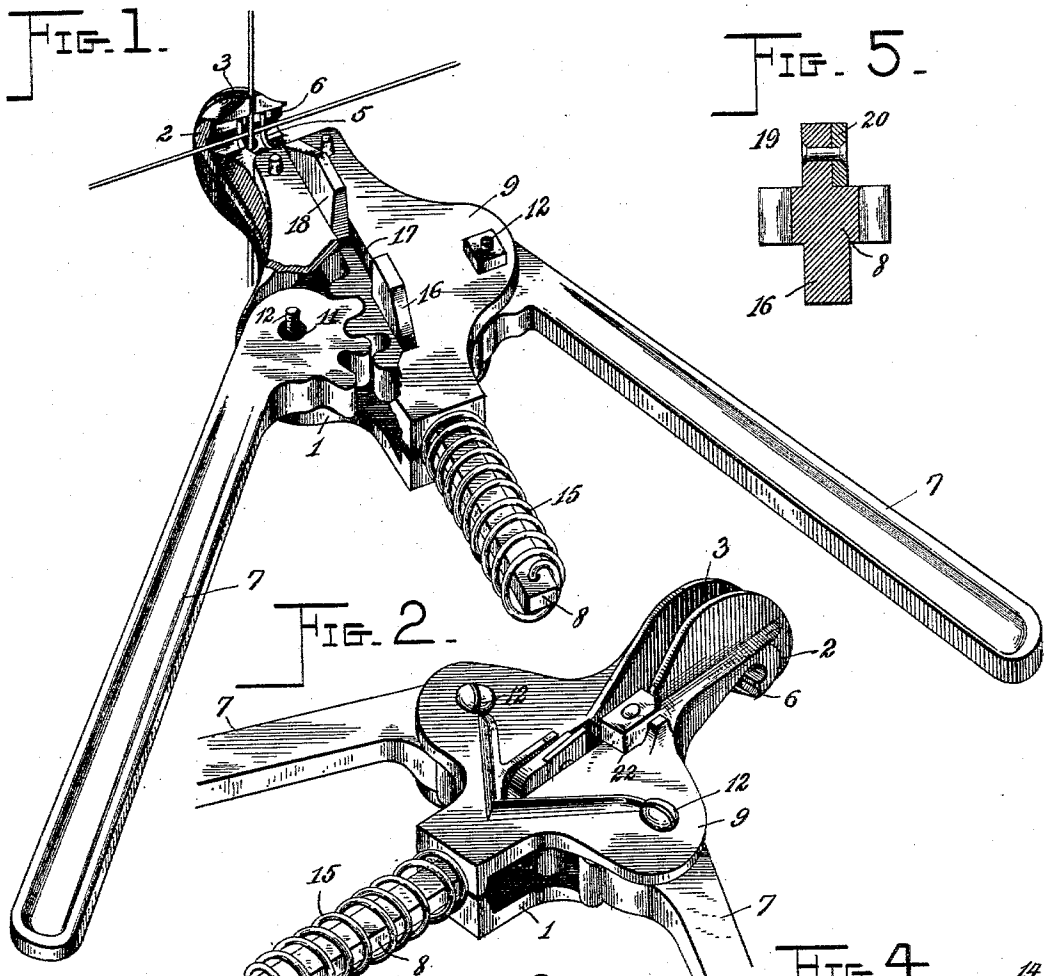

FIG. 5.

FIG. 2.

FIG. 3.

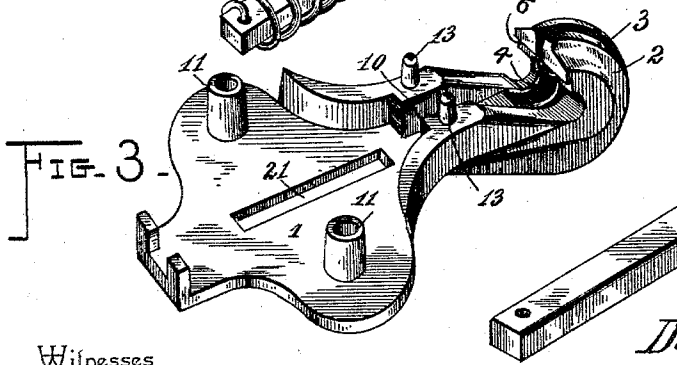

FIG. 4.

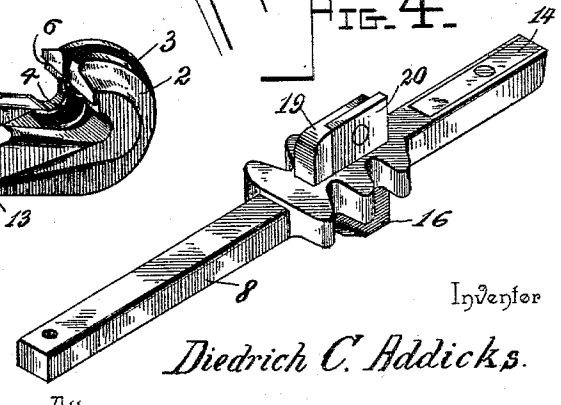

Witnesses
John F. Dewerwiel
U. B. Hillyard.

Inventor
Diedrich C. Addicks.

By his Attorneys,
C. A. Snow & Co.

THE NORRIS PETERS CO., PHOTO-LITHO., WASHINGTON, D. C.

UNITED STATES PATENT OFFICE.

DIEDRICH C. ADDICKS, OF BRONSON, MICHIGAN, ASSIGNOR OF ONE-HALF TO GEORGE COOK, OF BURR OAK, MICHIGAN.

TOOL FOR APPLYING WIRE STAY-LOCKS IN FENCES.

SPECIFICATION forming part of Letters Patent No. 598,132, dated February 1, 1898.

Application filed June 10, 1897. Serial No. 640,212. (No model.)

To all whom it may concern:

Be it known that I, DIEDRICH C. ADDICKS, a citizen of the United States, residing at Bronson, in the county of Branch and State of Michigan, have invented a new and useful Stay-Lock Pincers, of which the following is a specification.

This invention aims to provide a tool for applying locks or fasteners to wires at their point of crossing and embodies a wire cutter and pincers in addition to the devices for clenching the lock when in position.

For a full understanding of the merits and advantages of the invention reference is to be had to the accompanying drawings and the following description.

The improvement is susceptible of various changes in the form, proportion, and the minor details of construction without departing from the principle or sacrificing any of the advantages thereof, and to a full disclosure of the invention an adaptation thereof is shown in the accompanying drawings, in which—

Figure 1 is a perspective view of the improved tool, a portion of the cap-plate being broken away. Fig. 2 is a detail perspective view of the head or stock as seen from the reverse side, the operating-handles being broken away. Fig. 3 is a detail view in perspective of the head or stock of the tool, the cap-plate, plunger, and operating-handles being removed. Fig. 4 is a detail perspective view of the plunger. Fig. 5 is a transverse section of the plunger.

Corresponding and like parts are referred to in the following description and indicated in the several views of the drawings by the same reference characters.

The stock or head 1 of the tool is formed at its outer end with a stout or heavy hook 2, longitudinally slotted at 3 and having grooves 4 on the inner side of the hook upon opposite sides of the slot 3 to receive the terminals of the side members of the stay-lock or fastener 5 in order to direct the same when clenching after being applied to the wires at the point of crossing. A groove extends transversely across the end of the bill, forming a shoulder 6, which engages with the extremities of the stay-lock and prevents slipping when applying it to the fence or crossing wires. The inner side of the stock or head is recessed to receive the toothed ends of the levers 7 and the toothed portions of the plunger 8, and the recess is closed by a cap-plate 9, bolted to the stock. A channel 10 is formed in the inner face of the stock or head to receive the plunger 8 and direct it in its reciprocating movements. Bosses 11 are formed with the stock or head and pivotally support the levers 7 and are apertured to receive the bolts 12, by means of which the cap-plate 9 is secured in position. Teats 13 are formed on the inner face of the stock and pass through openings in the outer end of the cap-plate and serve to retain the latter in place and relieve the bolts 12 of the greater part of the strain incident to using the tool in the capacity of pincers, as will appear more fully hereinafter.

The plunger 8 is recessed in a side at its outer end to receive a die 14, which is of tempered steel, so as to resist the strain and wear to which it will be subjected when in service. This die is depressed in its outer end to receive the closed end of the stay-lock 5 and prevent slipping when applying the lock. A spring 15 is mounted upon the inner end of the plunger, and its outer end engages therewith by passing transversely through an opening formed therein, the inner end of the spring engaging with the stock or head 1 and bearing thereagainst, so as to hold the plunger and levers in a normal position and in condition for action. A jaw 16 is formed with the plunger and operates in a slot 17 of the cap-plate 9 and coöperates with a companion jaw 18, formed with the cap-plate at the front end of the slot 17, thereby providing in effect a pair of pincers. A lug 19 is formed on the opposite side of the plunger and receives a cutter 20, which is secured thereto, said lug and cutter operating in a slot 21 of the head or stock 1. A cutter 22 is secured to the outer face of the stock or head 1 to one side of the slot 21 and coöperates with the cutter 20 for severing wire in the ordinary manner. The lug 19 and jaw 16 project from opposite sides of the plunger and, operating in the slots of the stock and cap-plate, assist materially in directing the plunger in its reciprocating movements.

By having the levers 7 mounted upon bosses 11 the bolts 12 are relieved of all wear and

strain and a stronger support is had for the parts 7, and the latter may be placed in position independently of the bolts, thereby facilitating the assembling of the parts when constructing the tool.

When applying a stay-lock or fastener to crossing wires, one of the latter passes through the slots 3 and the other across the inner end of the hook 2, and the stay-lock is placed so that the wire passing through the slot 2 will enter the space between its side members and with its closed end engaging the end of the plunger and the extremities of its side members bearing against the shoulder 6. Upon moving the ends of the levers 7 together the plunger is projected toward the hook and the side members of the stay-lock caused to encircle the wire passing at right angles to the slot 3 and across the hook 2.

Having thus described the invention, what is claimed as new is—

1. A tool for applying stay-locks to crossing wires, comprising a stock having a hook at one end longitudinally slotted, and having the terminal of the bill cut away on its inner side forming a transverse shoulder, and having grooves contiguous to and upon opposite sides of the slot to receive the members of the lock and intersecting with the cut-away terminal of the bill to permit the extremities of the lock members engaging with the said shoulder, and a reciprocating plunger coöperating with the slotted hook, substantially as described.

2. In a tool for applying stay-locks to crossing wires, the combination of a stock having a longitudinally-slotted hook at one end, and having its inner side recessed and channeled, a plunger operating in the channel and across the recessed side, levers fulcrumed to the recessed side of the stock and having positive connection with the plunger for operating it, and a cap-plate extending over and closing the recessed side of the stock and retaining the operating parts in position, substantially as set forth.

3. In a tool for applying stay-locks to crossing wires, the combination of a stock formed with a slotted hook, a slotted plate forming a side of the stock and having a jaw at one end of the slot, a plunger for coöperating with the slotted hook and having a lateral jaw operating in the slot of the said plate to coöperate with the jaw thereof, and means for positively actuating the plunger, substantially as set forth.

4. In a tool for applying stay-locks to crossing wires, the combination of a stock having a slotted hook and a slotted portion formed with a lateral extension at a side of the slot, a plunger coöperating with the slotted hook and having a lateral extension working in the slotted portion of the stock and coöperating with the lateral extension thereof, and means for reciprocating the plunger, substantially as set forth.

5. In a tool for applying stay-locks to crossing wires, the combination of a stock recessed and longitudinally channeled in one side, and having a longitudinally-slotted hook at one end, and having a longitudinal slot, bosses and teats, a plunger operating in the channel and having toothed portions and oppositely-extending parts, the one operating in the longitudinal slot of the stock and bearing a cutter to coöperate with a corresponding cutter applied to the stock to one side of the slot therein, a cap-plate closing the recessed side of the stock and having openings to receive the aforesaid teats and provided with a longitudinal slot and a jaw to coöperate with the other extension of the plunger, a spring mounted upon the plunger for holding it in a normal position, and levers having toothed ends to coöperate with the toothed portions of the plunger, and mounted upon the aforesaid bosses, substantially as set forth.

In testimony that I claim the foregoing as my own I have hereto affixed my signature in the presence of two witnesses.

DIEDRICH C. ADDICKS.

Witnesses:
SETH MONROE,
GEORGE SHAFFMASTER.