Jan. 23, 1923. 1,443,098

C. F. SMITH.

CASING FOR CURRENT REGULATORS AND THE LIKE.

FILED JAN. 17, 1921.

FIG.1.

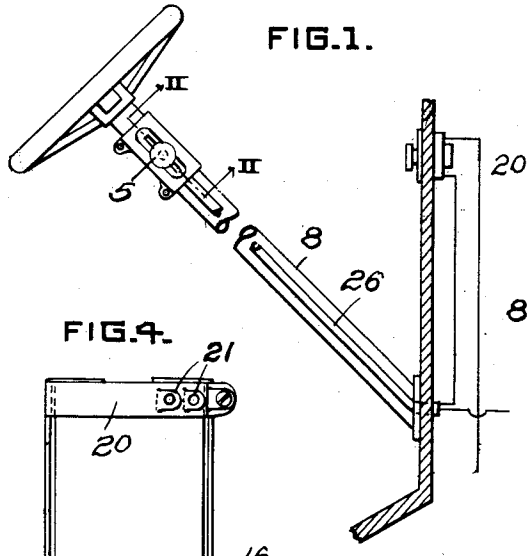


FIG.2.

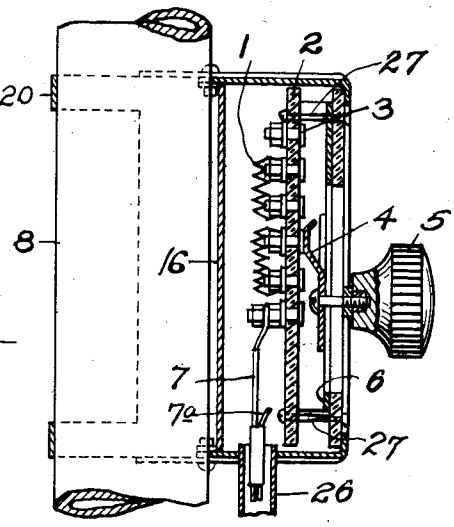


FIG.4.

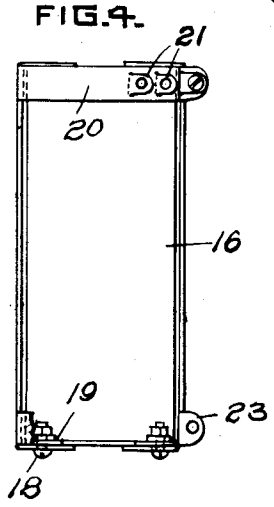


FIG.3.

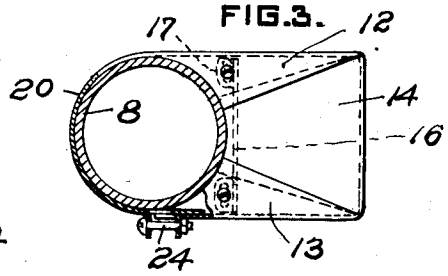


FIG.5.

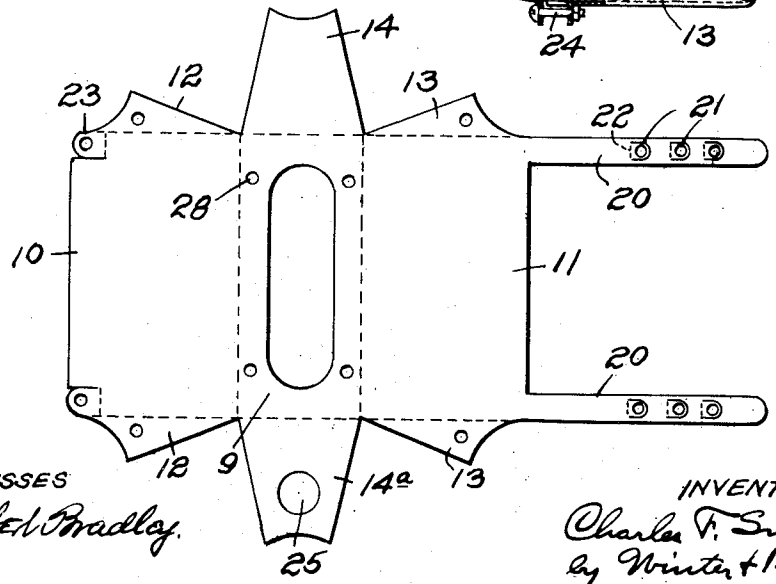


WITNESSES

J. Hebert Bradley.

INVENTOR

Charles F. Smith.

by Winter & Brown,

his attorneys.

Patented Jan. 23, 1923. 1,443,098

# UNITED STATES PATENT OFFICE.

CHARLES F. SMITH, OF PITTSBURGH, PENNSYLVANIA.

## CASING FOR CURRENT REGULATORS AND THE LIKE.

Application filed January 17, 1921. Serial No. 437,719.

*To all whom it may concern:*

Be it known that I, CHARLES F. SMITH, a citizen of the United States, and a resident of Pittsburgh, in the county of Allegheny and State of Pennsylvania, have invented a new and useful Improvement in Casings for Current Regulators and the like, of which the following is a specification.

The invention has to do with structures such as electric current regulators adapted to be attached to the steering rod housings of automobiles for controlling the intensity of headlights, although the invention is applicable to other specific purposes.

The object of the invention is to provide structures, such as described, with a casing which may be economically manufactured and which is readily attachable and conformable to different sized rods, such as the tubular housings surrounding the steering rods of automobiles.

The invention is illustrated in the accompanying drawings of which Fig. 1 is a vertical sectional view through a portion of the dash board of an automobile, the view showing an elevation of a current regulator attached to a steering rod housing; Fig. 2 a sectional view to enlarged scale taken on the line II—II Fig. 1; Fig. 3 a top plan view of the regulator as seen in Fig. 2; Fig. 4 a left side view of the regulator as seen in Fig. 2, the steering rod housing being removed, and one of the attaching straps being broken away; and Fig. 5 a view of a blank cut to the proper shape to form a casing such as particularly illustrated in Figs. 2, 3 and 4.

The construction of the current regulator illustrated herein is the same as that shown in my pending patent application, Serial No. 373,162, filed April 12th, 1920. It includes a rheostat the resistance coils 1 of which are electrically connected to a conductor 7 and are mounted on one side of a plate 2 of insulating material. On the other side of the plate 2 there are a plurality of contact buttons 3 electrically connected to the resistance coils and adapted to be successively contacted by a resilient movable arm 4 attached to an operating knob 5. The arm 4 is continuously in contact with a conducting plate 6 which is electrically connected to a circuit conductor 7ª, and makes contact with one or the other of the buttons 3 so that a greater or less amount of resistance is placed in the circuit.

Different makes of automobiles are provided with different sized steering rod housings or tubes 8 and accordingly a casing shaped to fit one housing will not neatly fit another of a different size. To the end that a current regulator, such as just explained, may be attached to different sized steering rod housings, and at the same time conform to the housing and present a neat and workmanlike appearance, the casing is formed of a blank of bendable material, preferably sheet metal, in such manner that the sides may be sprung laterally. The blank may be stamped out in the shape particularly illustrated in Fig. 5 to form a central top 9 and sides 10 and 11 adjoining its lateral edges. Each end of the casing is formed of a plurality of overlapping lugs, two of which, the lugs 12 and 13 adjoin the lateral edges of the sides, and the third of which, the lug 14, adjoins the end of the top 9. When the blank is folded and bent along the dotted lines indicated in Fig. 5, the end lugs 12, 13 and 14 have overlapping edges, as particularly seen in Fig. 3. The lower ends of the lugs are curved, preferably to a radius of curvature which is substantially that of an intermediate sized steering rod housing, so that when the sides of the casing 10 and 11 are sprung outwardly or inwardly with respect to the top 9, the lower edges of the lugs will substantially conform to the various sized cylindrical housings.

The bottom of the casing is preferably formed of a plate 16 provided at its ends with laterally bent tongues 17, through which and the lugs 12 and 13 small screw bolts 18 may extend. The tongues 17 are provided with slotted openings 19 for the reception of the screws 18, so that the sides of the casing may be readily sprung laterally to adjust the casing to fit different sized housings.

The current regulator or other control mechanism may be attached to the top 9 of the casing, as by means of screws 27 passing through holes 28 in such top, thereby permitting the sides 10 and 11 of the casing to be sprung inwardly or outwardly, as circumstances may require, without in any way interfering with the means for mounting the mechanism in the casing.

To attach the structure to a housing, the outer edge of the casing side 11 is preferably provided with a pair of straps 20, each of which has a plurality of knock-out lugs 21 pressed in them. Depending upon the size of the housing to which the structure is to be attached, any one of the lugs 21 in both straps 20 may be bent outwardly along the dotted line 22. The outer edge of the side 10 is provided with outwardly extending lugs 23 through which, and the lugs 21, attaching bolts 24 may extend.

The end lug $14^a$ of the casing may be provided with an opening 25 to receive an electrical conductor conduit 26, which may extend along the housing 8 to the dash board 26, or the conductors 7 and $7^a$ may extend freely through such opening in the lug $14^a$.

By providing current regulators or like devices with casings such as shown herein, a single casing may be used for attaching the regulator to different sized housings. If the sides of the casing should not be sufficiently spread laterally or should be spread laterally to too great an extent, the screws 18 may be loosened and the proper adjustment made, and either before or after the casing has been attached to a housing, the screws 18 may be tightened.

I claim:

1. A casing for current regulators and the like attachable and conformable to different sized supports, the casing being formed of a plate of bendable material and comprising a top, laterally spreadable sides adjoining the lateral edges of the top, and ends formed of overlapping lugs slidable upon each other and having their outer edges shaped to conform to a support, two of the lugs of each end being joined with the lateral edges of the sides and another lug of each end being joined with the end edge of the top.

2. A casing for current regulators and the like attachable and conformable to different sized cylindrical supports, the casing being formed of a plate of bendable material and comprising a top, laterally spreadable sides adjoining the lateral edges of the top, ends formed of overlapping lugs slidable upon each other and having their outer edges curved to substantially conform to a cylindrical support, two of the lugs of each end being joined with the lateral edges of the sides and another lug of each end being joined with the end edge of the top, and a strap adjoining the outer edge of one side and adapted to be attached to the outer edge of the other side.

3. A casing for current regulators and the like attachable and conformable to different sized cylindrical supports, the casing being formed of a sheet of bendable material and comprising a top, laterally spreadable sides adjoining the lateral edges of the top, and ends each formed of three overlapping lugs slidable upon each other, one of which lugs joins one end of the top and the other two of which join the adjacent lateral edges of the sides, the lower ends of said lugs being curved, whereby the sides of the casing may be bent laterally to cause the lower ends of the lugs to conform to different sized cylindrical supports.

4. A casing for current regulators and the like attachable and conformable to different sized supports, the casing being formed of a plate of bendable material and comprising a top, laterally spreadable sides adjoining the lateral edges of the top, ends formed of overlapping lugs adjoining the lateral edges of the sides and the end edges of the top, and a bottom plate adjustably attached at its ends to said end lugs adjoining said sides.

5. A casing for current regulators and the like attachable and conformable to different sized supports, the casing being formed of a sheet of bendable metal and comprising a top, laterally spreadable sides adjoining the lateral edges of the top, ends each formed of three overlapping lugs having their lower ends curved, one of which lugs adjoins an end edge of the top, and the other two of which adjoin the lateral edges of the sides, a bottom comprising a plate provided with slotted tongues arranged adjacent to the end lugs adjoining the sides, and screws extending through said end lugs and the slots in said tongues.

In testimony whereof, I have hereunto set my hand.

CHARLES F. SMITH.

Witness:
EDWIN O. JOHNS.