March 11, 1952 A. H. GEIB 2,588,917

SHEET STOP DEVICE FOR ROTARY DUPLICATING MACHINES

Filed Jan. 11, 1947 4 Sheets-Sheet 1

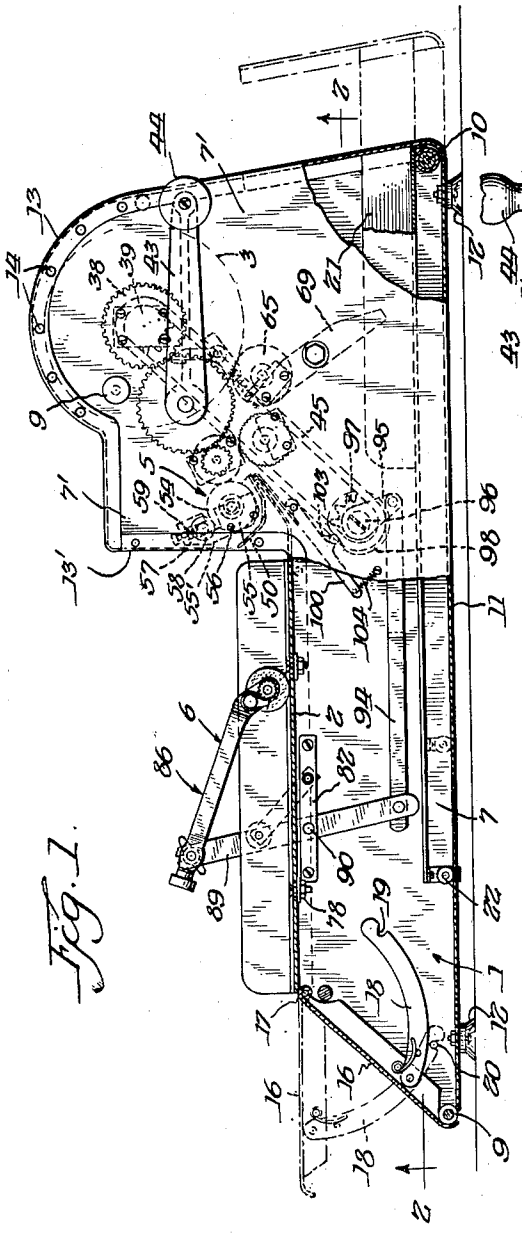

Fig. 1.

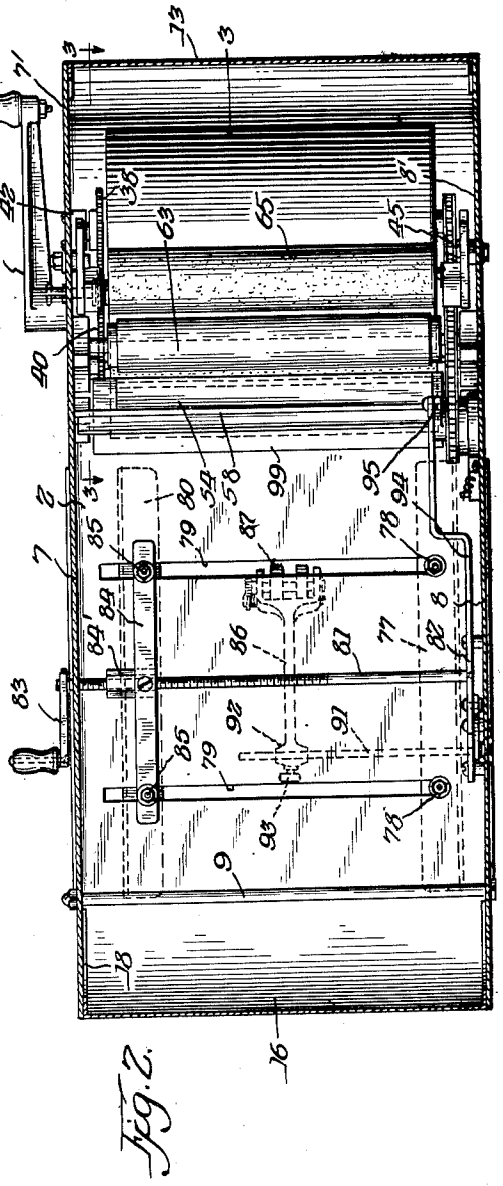

Fig. 2.

Inventor:
Arthur H. Geib.
By: W. F. Kellogg Atty.

March 11, 1952 A. H. GEIB 2,588,917

SHEET STOP DEVICE FOR ROTARY DUPLICATING MACHINES

Filed Jan. 11, 1947 4 Sheets-Sheet 2

Fig. 3.

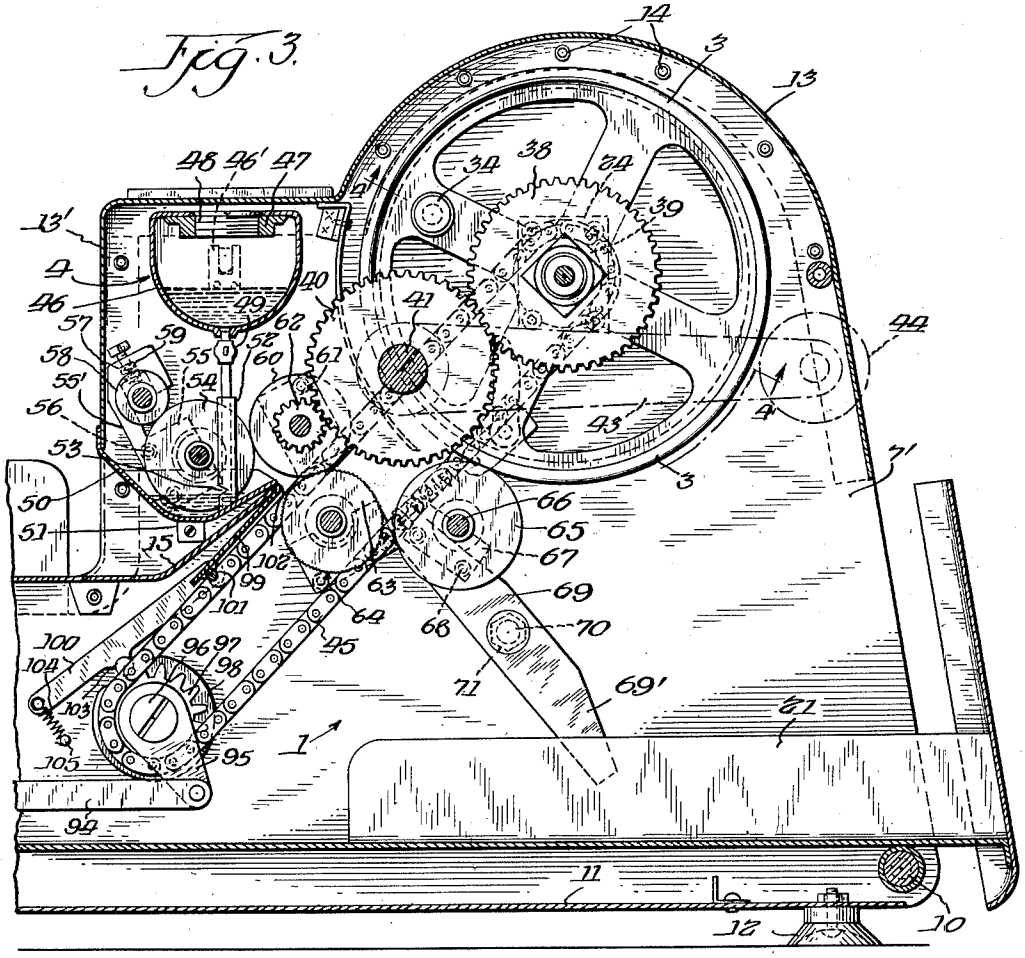

Fig. 4.

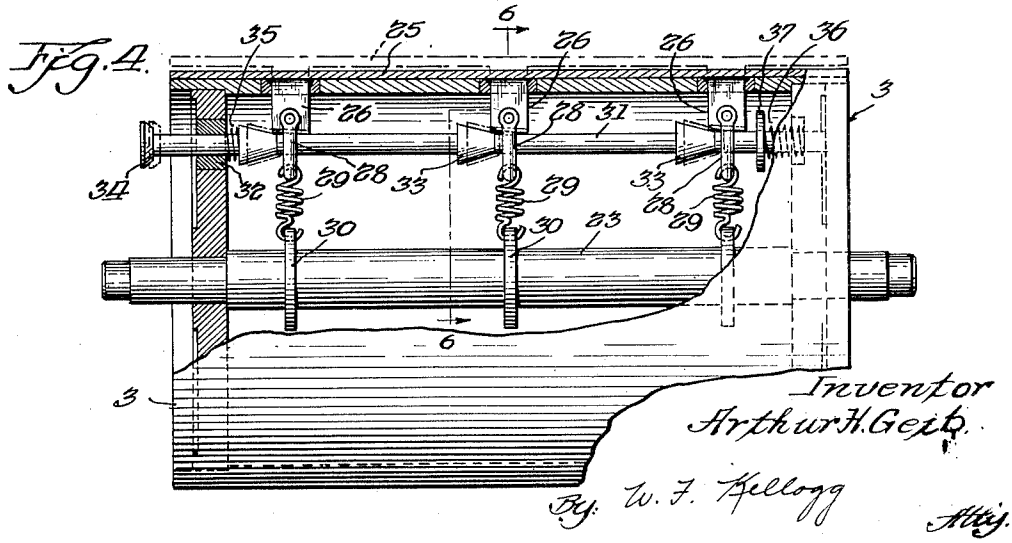

Inventor
Arthur H. Geib.
By W. F. Kellogg
Atty.

March 11, 1952 A. H. GEIB 2,588,917

SHEET STOP DEVICE FOR ROTARY DUPLICATING MACHINES

Filed Jan. 11, 1947 4 Sheets-Sheet 3

Fig. 5.

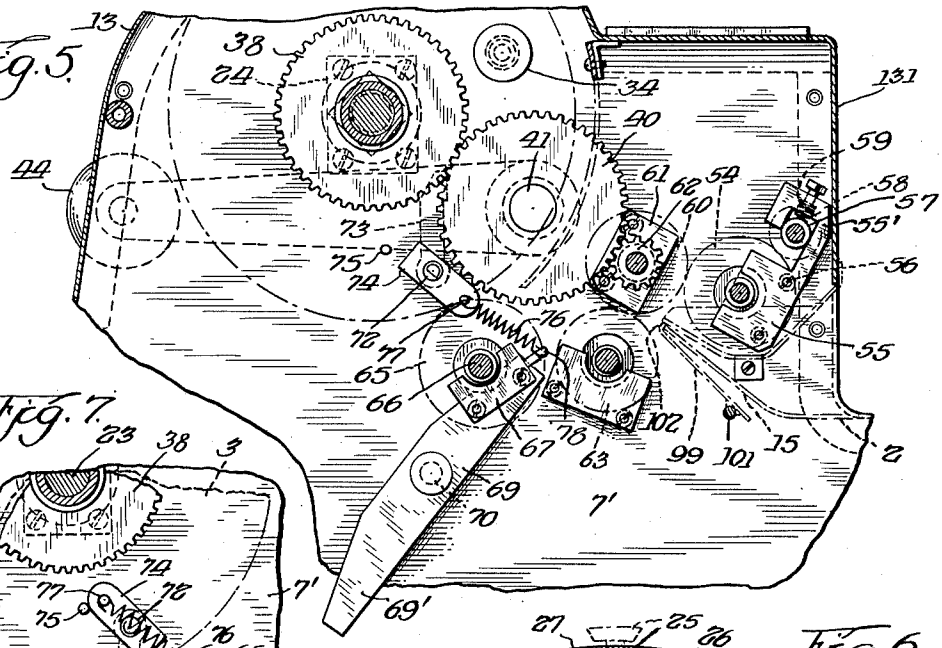

Fig. 7.

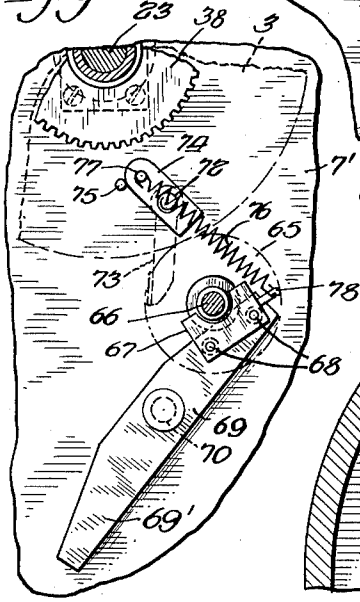

Fig. 6.

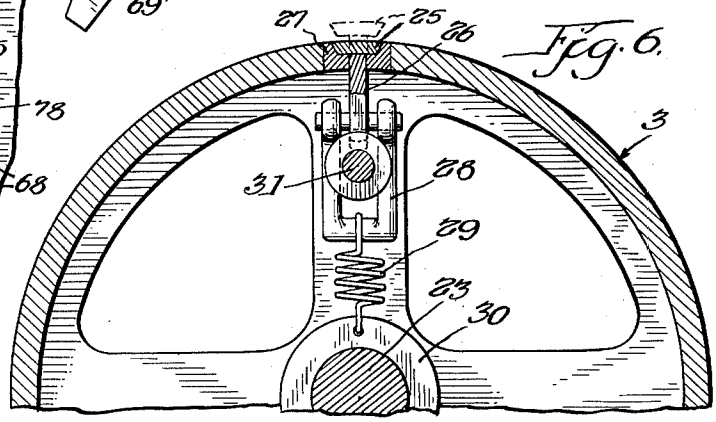

Fig. 8.

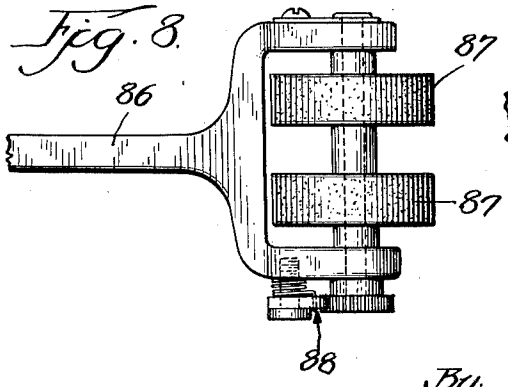

Fig. 9.

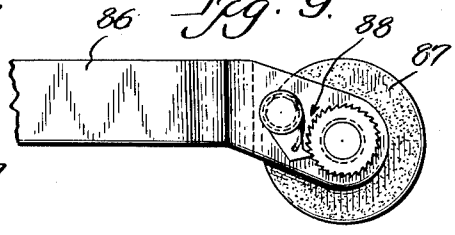

Inventor:
Arthur H. Geib.
By: W. J. Kellogg
Atty.

March 11, 1952 A. H. GEIB 2,588,917

SHEET STOP DEVICE FOR ROTARY DUPLICATING MACHINES

Filed Jan. 11, 1947 4 Sheets-Sheet 4

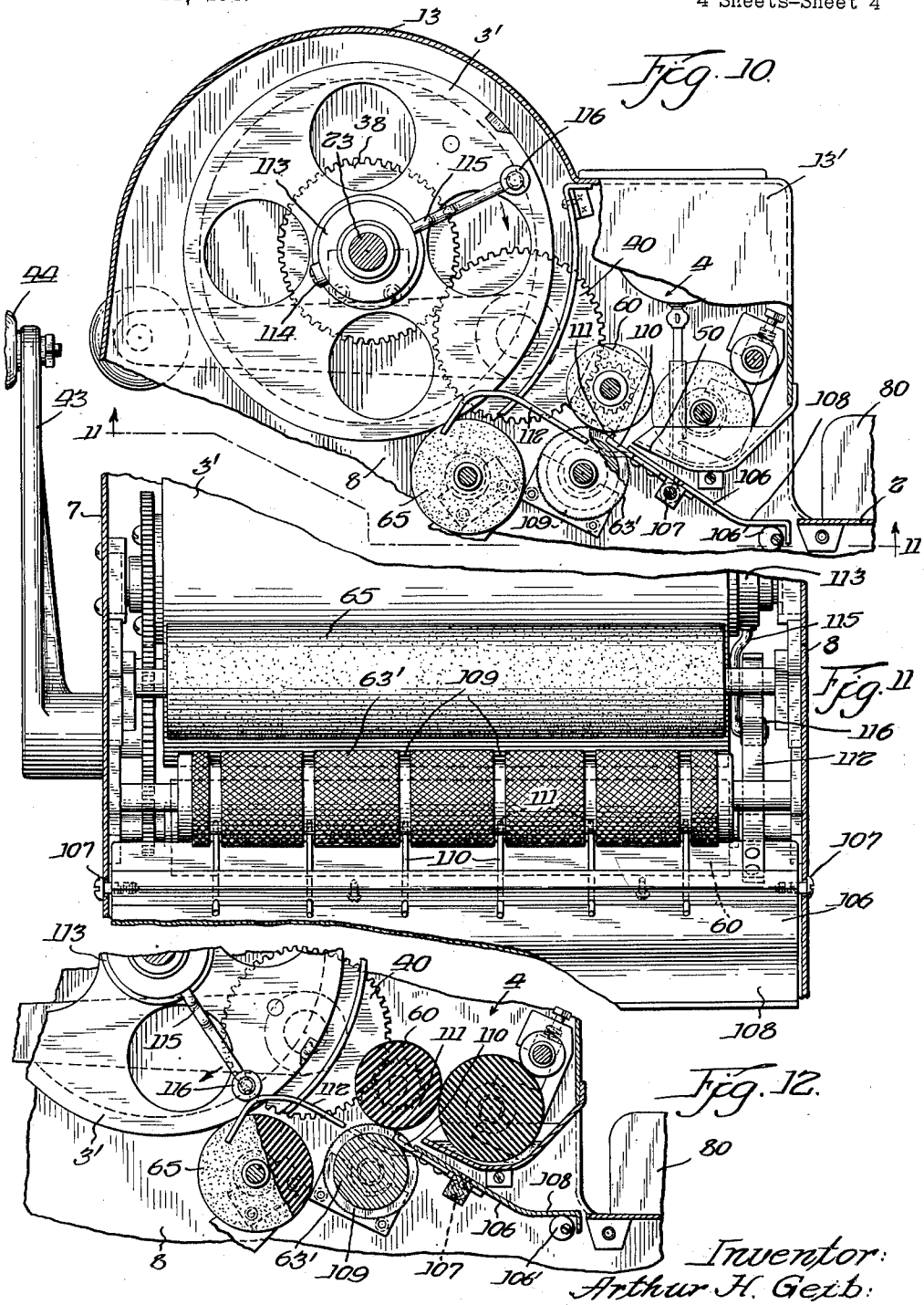

Fig. 10.

Fig. 11

Fig. 12.

Inventor:
Arthur H. Geib:
By: W. F. Kellogg
Atty.

Patented Mar. 11, 1952

2,588,917

UNITED STATES PATENT OFFICE

2,588,917

SHEET STOP DEVICE FOR ROTARY DUPLICATING MACHINES

Arthur H. Geib, Milwaukee, Wis.

Application January 11, 1947, Serial No. 721,628

5 Claims. (Cl. 101—132.5)

1

This invention relates to improvements in dulpicating machines of the planographic type, and particularly, to those types of machines in which transfer is effected by the bodily moistening of a sheet which is then surface engaged with a rotatable drum carried master sheet previously prepared by appropriately contacting the same with a hectograph or similar sheet, and applying pre-patterned pressure to such master sheet, as by typing, stylus, etc.

An object of the invention is to povide a duplicating machine in which the master sheet carrying drum will be continuously rotated at a uniform rate of speed through a complete and continuing rotation of the same, whereby to effect even and uniform impression on the surface of a sheet or sheets passed into engagement with and by the same, thus, insuring clean, clear and sharply defined transfer of matter, characters, etc., from the master sheet to such sheet or sheets.

Another object of the invention is to provide a machine of the stated character which, because of the continuous operational rotation of its master sheet carrying drum, will materially reduce wear and tear on and of its active and/or working parts, and so, greatly prolong the period of efficient use of the machine, as well as reduce operating fatigue.

It is also an object of the invention to provide a duplicating machine wherein work sheets (sheets to be duplicated) will be so delivered to and contacted with the drum carried master sheet that said work sheets, following duplicating impression, will be discharged or delivered from the machine to a receiving drawer, tray or the like, face or printed side up, hence, enabling an operator to conveniently and effectually maintain a constant inspection of the same—if desired—without interruption of operation of the machine.

The invention also aims to provide a machine having a novel and advantageous work sheet feeding means which will insure individual and successive sheet feeding to the machine moistening means and to the master sheet carrying drum; in the latter operation, causing the successively fed work sheets to be engaged with the drum in absolutely accurate registration with the master sheet thereon, thus effecting proper placement of the duplicating transfer from the master sheet to and on said work sheets.

A still further object of the invention resides in the provision of an improved and advantageous fluid feeding and moistening means for work sheets successively fed into the machine

2

prior to their surface contact with the master sheet carrying drum, whereby said sheets will each be economically supplied with a predetermined, adequate and evenly applied and distributed amount of moisture in order that they will take clear, uniform and sharp impression or transfer from the hectograph prepared master sheet on said drum when surface contacted therewith.

Yet another object of the invention is to provide a duplicating machine having an impression roller so arranged and mounted with relation to the machine master sheet carrying roller that a face-side-up impression or transfer will be taken by a work sheet surface contacting with the master sheet, said impression roller being capable of instant and convenient bodily adjustment for exerting a predetermined degree of pressure contact with the drum peripheral surface in order that the density, sharpness and other incidental and desirable characteristics of a resulting transfer may be advantageously and positively controlled and regulated.

A further and important desideratum of the invention is to provide a duplicating machine wherein convenient and ready access may be had to any and all of the various working parts thereof, thus, making for a maximum of operating, adjustment, repair and replacement efficiency and simplicity.

The foregoing, as well as other objects, advantages and meritorious teachings of my invention, will be in part obvious and in part pointed out in the following detailed disclosure thereof, when taken in conjunction with the accompanying drawings, it being understood that the forms of invention presented herein are precise and what are now considered to be the best modes of embodying its principles, but that modifications and changes may be made in specific embodiments without departing from its essential features.

In the drawings:

Figure 1 is a partial vertical longitudinal section through the improved duplicating machine, having a portion of the near side wall of the machine bed shown in elevation and certain of the working parts of said machine shown in dotted lines inwardly of the elevationally shown portion and of said bed side wall.

Figure 2 is a horizontal longitudinal section through the improved machine, taken on the line 2—2 of Figure 1, looking in the direction in which the arrows point.

Figure 3 is an enlarged fragmentary vertical longitudinal section through the normally rear-

ward portion of the machine, taken on the line 3—3 of Figure 2, looking in the direction in which the arrows point.

Figure 4 is a detail in side elevation, with parts thereof broken away and shown in section, of the machine master drum.

Figure 5 is an enlarged fragmentary vertical longitudinal section, similar to Figure 3, but looking in an opposite direction to that in which Figure 3 is taken.

Figure 6 is an enlarged fragmentary detail in vertical transverse section through the improved master drum.

Figure 7 is a fragmentary detail in elevation of the mounting and the means for moving the impression roller of the machine into and out of pressure engagement with the peripheral surface of the master drum.

Figure 8 is an enlarged fragmentary detail in top plan of the form of work sheet engaging and pushing device for effecting feeding of the work sheets from the machine shelf to the duplicating mechanism of said machine.

Figure 9 is an enlarged fragmentary detail in end elevation of said device.

Figure 10 is a fragmentary vertical longitudinal section through a portion of the machine provided with a modified form of work sheet control gate for intermittently feeding work sheets from the machine shelf to and between the sheet moistening and feed rollers.

Figure 11 is a fragmentary horizontal section taken on the line 11—11 of Figure 10, looking in the direction in which the arrows point, and

Figure 12 is a fragmentary vertical longitudinal section through a portion of the duplicating machine, showing the improved and modified form of work sheet control gate in its depressed or open position.

Referring in detail to the drawings, the invention, generally stated, includes a bed or supporting body 1 of substantially rectangular formation having a flat horizontal work sheet receiving and feeding shelf 2 therein; a master sheet receiving and carrying drum 3 (hereinafter referred to as the master drum); a fluid supplying means 4; a work sheet feeding and moistening assembly 5, and a work sheet pusher assembly 6.

The bed 1, as stated, is of substantially rectangular formation. It consists of two relatively spaced and parallel complemental side plates 7 and 8 made of appropriate gauge sheet metal or other suitable material fixedly interconnected at the lower portions of their opposite ends by transverse rods 9 and 10 locked by nuts or similar means. Thus, the proper degree of rigidity is provided to the bed 1.

The normally rearward portions of the side plates are of greater depth than their forward portions, as indicated at 7' and 8' and serve to house and support therebetween the master drum 3, the fluid supplying means 4 and the work sheet feeding and moistening assembly 5.

The lower portions of the side plates 7 and 8 are flanged, as at 11, throughout their lengths, as shown in Figure 1 of the drawings, whereby to strengthen said plates and also, permit the connection of suitable feet 12, at appropriate points, for an obvious purpose.

Another piece of sheet metal 13, of proper shape and size, having flanged ends, is engaged between the upper extremities of the portions 7' and 8' of the side plates and serves as a cover or shield, i. e., shielding and protecting the machine working parts therebelow. Screws or like devices 14 ar engaged through openings in the flanges of the shields 13 and effects its removable connection to the side plates 7 and 8.

The flat or plane horizontal shelf 2 is positioned between though slightly below the upper extremities of the normally forward and shallower portions of the side plates 7 and 8. It extends longitudinally of the bed 1 to a point in proximity to the inner vertical sides of their portions 7' and 8', as will be seen upon reference to Figures 1, 3 and 5, and is formed with an oblique and upwardly extending lip or apron 15 entered into the space between the adjacent portions of said portions 7' and 8'.

A leaf extension 16 is hinged to the forward transverse end of the shelf 2, as at 17, and has spring pressed arcuately shaped and right angularly disposed supporting arms 18 pivoted thereto, each formed with a recessed free end 19 removably engageable, at times, with pins 20 mounted on portions of the inner sides of the side plates 7 and 8. Thus, the leaf may, when desired, be supported in a horizontal plane corresponding to that of the shelf 2, as shown in dotted lines in Figure 1, whereby to provide increased shelf area. When such additional shelf area is unneeded, the lead may be swung downwardly to the full line position shown in Figure 1.

To receive duplicated sheets as they are passed by and from the master drum 3, I may and preferably do provide the rearward portion of the bed 1 with a drawer 21 slidable over the rear connecting rod 10 into and longitudinally between the side plates 7 and 8. Rollers 22 are connected to the lower side and inner end of the drawer bottom for traversing engagement with the bed bottom 11 to facilitate free sliding movement of said drawer to open or closed position. With the drawer opened or extended from the bed 1, it will be understood that an effectual means for receiving duplicated sheets from the machine and retaining them piled, will be provided.

The master drum 3, disposed transversely of and between the side plate portions 7' and 8', is fixedly mounted on a shaft 23 whose opposite ends are journaled in bearings 24 connected to the inner faces of said portions. A portion of the drum periphery has a cross-sectionally dovetailed way formed in and longitudinally of and throughout its length. Said way normally flushly and snugly receives therein a correspondingly shaped and sized work sheet clamp bar 25. Relatively equi-spaced fingers 26 are rigidly connected to the inner side of the clamp bar 25 and extend radially inwardly of the drum 3 through suitable bushings 27 set therein, where their free and inner ends are pivotally engaged by clevises or links 28, whose inner ends, in turn, have certain of the ends of coiled springs 29 connected thereto. Annuluses 30, loosely engaged about intermediate portions of the mounting shaft 23, are pivotally engaged by the inner or remaining ends of the coiled springs 29. Accordingly, it will be understood that the clevis and coiled spring connection of the clamp bar carried fingers 26 to the master drum mounting shaft 23 through the annuluses 30, will serve to normally and yieldably retain said clamp bar 25 in the master drum peripheral way; moveover, that the edge or marginal portion of a hectograph or otherwise prepared master sheet engaged between the clamp bar and an adjacent side of its receiving way, will be securely though detachably connected with the result that said sheet

will be positively, yet detachably connected to the drum, and so, insure its proper positioning thereon for effecting duplicating transfers.

In order that the clamp bar 25 may be selectively moved radially outwardly or disengaged from the aforesaid drum peripheral way, I slidably engage a rod 31 through bushings 32 fixedly inset in suitable openings formed in portions of the drum mounting spider (see Figure 4). Said rod, it will be noted, is disposed longitudinally of and within the master drum 3. Substantially frusto-conical cam elements, generally identified by the numeral 33, are fixedly provided to the rod 31 in equi-spaced relation throughout its length, while the normally outer and extended end of the rod may be and preferably is provided with a button or similar finger engaging device 34. Equi-spaced cams 33, as will be seen upon reference to Figure 4 of the drawings, are normally positioned adjacent the inner ends of the individual clamp bar carried fingers 26. Also, it will be noted that said rod 31, is engaged loosely through the link connected clevises 28, as is clearly shown in Figure 6 of the drawings.

Coiled springs 35 and 36 are engaged about the opposite end portions of the rod 31; the spring 35 having bearing on an adjacent portion of the near bushing 32 and on an adjacent portion of the near cam element 33, while the spring 36 has bearing, at one of its ends, on an annular shoulder 37 fixedly connected to the rod 31 and its remaining end bearingly engaged with an adjacent portion of the near rod receiving bushing. Thus, when it is desired to cause radial outward movement of the clamp bar 25 from the position shown in full lines in Figure 4 to that position shown in dotted lines, the button 34 has an inward thrust imparted thereto. Such thrust effects longitudinal inward movement of the rod 31, causing its equi-spaced cams 33 to be slidingly engaged with an over the inner ends of the particularly adjacent clamp bar carried fingers 26, hence, imparting an outward thrust to said fingers, and by consequence, outward thrust or radial movement to the clamp bar 25. With the clamp bar 25 in its extended position, i. e., radially removed from its receiving way in the drum periphery, it will be understood that the edge or marginal portion of a master sheet may be conveniently and quickly arranged adjacent the same in and adjacent one side wall of its receiving way. With release of thrust or pressure on the rod 31, the now compressed spring 36 will cause its immediate return to normal or original position, slidably disengaging the frusto-conical cams 33 from the inner ends of the clamp bar carried fingers 26 whereby the coiled springs 29 connected to said fingers through their respective clevises 28 will inwardly pull and re-engage the clamp bar 25 in its said drum periphery receiving way. The coiled spring 35, it will be understood, serves to limit the extent of outward sliding movement of the longitudinally disposed or mounted rod 31.

The opposite, extended or trunnion-like ends of the mounting shaft 23 engaged in the bearings 24 individually and fixedly mount a gear 38 and a sprocket wheel 39. The gear 38 constantly meshes with a driving gear 40 mounted on a stub-shaft 41 suitably journaled in a bearing 42 on the inner face of the portion 7' of the side plate 7. Said stub-shaft is equipped with an operating crank 43 arranged outwardly of the side plate 7 having a handle 44 on its free outer end. The sprocket wheel 39 on the remaining end of the shaft 23 is engaged about by a sprocket chain 45, the purpose of which is hereinafter more fully described.

It is, of course, to be understood that the operating crank 43 may be replaced by a motor or other drive means (not shown), if desired.

Referring now to the fluid supplying means, hereinbefore identified by the numeral 4, the same comprises a trough-like tank 46 removably mounted transversely of and between upper portions of the side plate portions 7' and 8' on brackets 46' secured to their inner faces, having an internally threaded filling opening provided fitting 47 in its top, adapted to be normally closed by a plug 48 turned thereinto, and a fluid discharge way having a vertical downwardly discharging valved fluid feed pipe 49 tapped thereinto. A fluid pan or well 50, mounted on brackets 51, transversely of and between the portions 7' and 8' of the side plates directly below the tank 46, receives therein an upstanding tubular body 52 ported at its lower end, as at 53, having the lower or downwardly extended part of the feed pipe 49 telescoped in and discharging thereinto. Thus, with opening of the valve of the feed pipe 49, fluid from the tank 46 will be discharged downwardly into the well 50 until the level of such fluid reaches the port 53 of the tubular body 52, i. e., barometric type of fluid feed between said tank 46 and said well 50.

At this point, it will be noted that the fluid supplying means 4 is enclosed by an extended and appropriately shaped portion 13' of the sheet metal piece 13, heretofore described.

In the work sheet feeding and moistening assembly 5, a rubber fluid pick-up roller 54 is positioned, in and longitudinally of the well 50. The opposite ends of its shaft are rotatably received in bearings in blocks 55 secured by screws or similar fasteners 56 to the inner faces of the side plate portions 7' and 8'. Right angularly formed arms 55' are fixedly carried on the upper sides of the blocks 55 and each have inwardly opening pockets 57 formed in their free extremities, the purpose of which will be presently apparent.

Mounted above and somewhat forwardly of and parallel to the fluid pick-up roller 54, and pressure contacting its yieldable peripheral surface lengthwise throughout the same, is a metal squeegee roller 58 whose end carried co-axial trunnions are rotatably received in bearings seated on compression springs 59 housed in each of the inwardly opening pockets 57 in the extremities of the right angularly formed arms 55' of the bearing blocks 55. Thus, the squeegee roller 58 is spring loaded and is maintained in yieldable though positive peripheral engagement with the pick-up roller, the extent of which is governed by the degree of pressure exerted by the compression springs 59 on the aforesaid trunnion bearings. The hard metal periphery of the squeegee roller 58 is smooth throughout its area, and by its rotation over the periphery of the comparatively soft rubber pick-up roller 54, through frictional contact therewith, functions to distribute liquid taken up by the pick-up roller over and along the same; also, to remove any surplus of such liquid from the pick-up roller periphery whereby to ensure its efficient operation.

It is considered of importance to here note that the hard smooth peripheral surface of the squeegee roller is highly effectual in causing an even and uniform distribution of well picked up moisture over and about the peripheral surface of the pick-up roller 54. Because of such periph-

eral distribution of moisture on said pick-up roller, the same will be caused to effect an even and uniform moisture transfer to the moistening roller 60, hereinafter fully described, for contact transfer to work sheet surfaces engaged thereby during operation of the fluid supplying means 4 and said work sheet feeding and moistening assembly 5.

The moistening roller 60, preferably constructed of rubber possessed of a suitable degree of softness or pliability, is arranged rearwardly adjacent and parallel to the pick-up roller 54. It is journaled in block or like bearings 61 detachably connected to adjacent portions of the inner faces of the portions 7' and 8' of the bed side plates. Relationing of the moistening roller to the pick-up roller 54, is such that peripheral engagement between them, at a predetermined pressure, is effected. Consequently, the transfer of moisture from the latter to the former occurs during their rotation.

In order that rotary motion may be transmitted from the driving gear 40 to the moistening roller 60, a pinion 62 is fixedly mounted on an appropriate end of its shaft and is in constant mesh with said driving gear 40. Therefore, it will be understood that with rotation of the driving gear 40 in a predetermined direction, rotation of the moistening roller 60 in an opposite direction will be effected. Because of the fact that the moistening roller 60 has peripheral frictional engagement with the periphery of the adjacent rubber pick-up roller 54, rotary motion, in an opposite direction, will be transmitted by said moistening roller 60 to said pick-up roller 54. By the same token, the metal squeegee roller 58, frictionally contacting the yieldable peripheral surface of the pick-up roller 54, will have rotary motion transmitted thereto collectively with rotation of the latter.

Immediately adjacent and lightly frictionally contacting the under peripheral side of the work sheet moistening roller 60, throughout its length, is a relatively paral'el feed roller 63. Said roller is preferably made of metal and has its periphery knurled or roughened, as at 64. Due to the frictional engagement between the rollers 60 and 63, it will be seen that with rotation of the roller 60, the other thereof will be collectively rotated though in an opposite direction. Thus, work sheets will be passed between the ro'lers 60 and 63 and positively delivered or fed therefrom to the master drum 3. At the same time, said sheets will have their upper surfaces wholly and uniformly engaged with the periphery of the moistening roller 60, and so, thoroughly moistened.

In order that the moistened work sheets passed from the rollers 60 and 63 will be properly engaged with and impressed on the periphery of the master drum 3, i. e., the master sheet attached to and carried by the same, an impression roller 65 is adjustably or movably mounted in proximity and parallel to its underside (see Figures 5 and 7). This impression roller, which is made of appropriately soft rubber, is carried by a shaft 66, whose opposite ends extend beyond its opposite sides. The shaft ends are rotatably mounted in a pair of bearing blocks 67 connected by fastening devices 68 to arms 69 pivotally supported on the opposite portions of a rod 70 disposed transversely of and between the lower portions of the bed side plate portions 7' and 8' and locked thereto, as at 71. As will be noted on reference to Figures 1, 3 and 5 of the accompanying drawings, the rod mounted arms 69 and their respective bearing blocks 67 receiving the opposite ends of the impression roller carrying shaft 66, are positioned in proximity to adjacent and inner face portions of the bed plate portions 7' and 8'. In consequence, rockable mounting of the impression roller 65 (movement to and/or from the periphery of the master drum 3) will be permitted.

To selectively transmit rocking movement to the impression roller, whereby the same may be selectively moved into or out of peripheral contact with the master drum 3, inwardly extending stub-shafts 72 are journaled in bearings in the portions 7' and 8' of the bed side plates in proximity to the opposite ends of the master drum 3. A finger engaging piece 73 is fixedly mounted on the outer end of each stub-shaft 72 and is arranged outwardly of its particular mounting side plate portion 7' and/or 8', where convenient operational access may be had thereto. An arm 74 is affixed to the inner end of each stub-shaft 72. Thus, with pivotal movement of the pieces 73, their respective stub-shaft carried arms 74 will be rotated, the extent of which rotation is limited in one direction by a stop 75 engaged in the inner faces of both side portions 7' and 8', as shown in Figures 5 and 7 of the drawings. Contractile coiled springs 76 are connected at certain of their ends to the stub-shaft carried arms 74, as at 77, and at their opposite ends to anchoring fingers 78 carried on the near or companionate bearing blocks 67. When the finger engaging pieces 73 are collectively in the positions shown in Figure 5, the spring engaged ends of their respective arms 74 will be inwardly and downwardly disposed, thereby allowing the springs 76 to be contracted, and so, transmit a minimum of pull to the bearing blocks 67. Consequently, the compression roller 65 will be only lightly contacted with the periphery of the master drum 3, preventing surface distortion of both master drum and impression roller. This positioning of the impression roller 65 is effected only when the machine is not being operated or when only a minimum of impression contact between the master drum and impression roller is desired.

When it is required that the impression roller 65 shall be contacted with the master drum periphery under greater pressure than that above explained, as when the machine is operated, the finger engaging pieces 73 are each swung downwardly to positions such as shown in Figure 7 of the drawings. In these positions, the stub-shafts 72 will have been rotated, whereby to pivot or swing the spring engaged ends of their respective arms 74 upwardly into abutting engagement with the adjacent stops 75, greatly increasing the tension of the springs 76 and causing the impression roller 65 to be contacted with the master drum periphery under a correspondingly increased pressure.

The impression roller tensioning and de-tensioning means, just described, it will be understood, represent but one form of means for regulating contact between the compression roller 65 and the master drum 3. If desired, other and as effective means may be substituted therefor. To this end, it will be noted that the hereinbefore described arms 69 are each provided with extensions 69' in order that other forms of regulatable tensioning means (not shown) may be connected thereto.

To effect the successive individual feeding of work sheets from the machine bed shelf 2 into

contact with the master drum 3, for duplicating transfer or impression, a cross-sectionally right angularly shaped guide wall 77 is immovably arranged on and longitudinally of said shelf in juxtaposed parallel relation to one of the bed side plates, i. e., the side plate 8. Said wall has its inner end substantially longitudinally aligned at the adjacent end of the sheet feeding and moistening assembly 5, as shown in Figure 2. Bolts 78 or like fasteners connect the guide wall to the shelf 2. Relatively spaced parallel transverse slots 79 are formed in the shelf 2. A second and complemental guide wall 80 is arranged on the shelf 2 in opposed relation to the guide wall 77 and is slidable transversely of the shelf over the slots 79.

Transverse sliding motion of the guide wall 80 is effected by positioning a screw-threaded shaft 81 transversely of the underside of the shelf 2 between and parallel to the slots 79, rotatably mounting one end of the shaft in a bracket 82 secured to an appropriate portion of the bed side plate 8 and journaling its opposite end in a suitable bearing in the remaining side plate 7. A hand crank 83 is engaged with the journaled and extended end of the shaft 81 and facilitates its rotation as and when desired. A bracket arm 84 having an internally screw-threaded collar 84' intermediately of its opposite ends, is positioned beneath the shelf 2 adjacent to and longitudinally of the slidable guide wall 80 and is bolted or otherwise connected to said wall through the transverse slots 79, as at 85. The screw-threaded collar 84' receives the shaft 81 therethrough. Thus, by rotation of the shaft 81 through the hand crank 83, the threaded collar 84 travels along said shaft in the desired direction, moving the guide-wall 80 along with it transversely of the shelf 2, whereby to effect a desired adjustment of the same, along with work sheets which may be stacked between it and the immovable wall 77, with relation to the machine sheet feeding and moistening assembly 5.

Individual feeding of work sheets stacked between the guide walls 77 and 80, is attained by means of a reciprocal feeder or pusher arm, generally identified by the numeral 86, arranged over and longitudinally of the shelf 2, as will be observed upon reference to Figure 1 of the drawings. The forward and inner end of this downwardly oblique arm, is bifurcated and provided with bearings in which a roller 87, having a comparatively soft friction sheet engaging peripheral surface, is rotatably mounted. Because of a pawl and ratchet assembly 88, operatively associated with the feeder arm bifurcated end and roller, the latter is permitted to rotate freely on its retracting and rearward longitudinal movement over the shelf 2 and work sheets stacked thereon. On the forward longitudinal movement or work stroke of the arm, said roller 87 is prevented from rotating by means of the pawl and ratchet assembly 88, and as the result thereof, the sheet engaging peripheral surface thereof frictionally engages with and feeds an individual work sheet forwardly into engagement with the heretofore described assembly 5 for transfer or impression from the master drum 3.

Reciprocation of the feeder arm 86, as above, is caused by a rocker arm 89 pivotally mounted intermediately of its ends on the bracket 82, as at 90. A laterally and inwardly disposed horizontal finger 91 is fixedly carried on the upper end of the rocker arm 89 and is engaged through the sleeve bracket 92 on the adjacent end of the feeder arm 86 and is releasably locked in a particularly adjusted position on the finger by a set-screw 93. Obviously, the feeder arm 86 may be selectively adjusted along the finger 91 whereby its friction roller 87 will be surface engaged with the shelf received work sheets at a desired point. The lower end of the rocker arm 89 is pivotally connected to the adjacent end of a connecting bar 94 disposed longitudinally of the lower portion of the machine bed 1 (see Figures 1 and 2). The remaining end of the bar 94 is pivotally connected to the free end of an arm 95 fixedly mounted on an inwardly disposed stub-shaft 96 journaled in a bearing provided therefor in a lower and forward portion of the bed side plate portion 8'. A sprocket wheel 97 and cam 98 are also mounted on and keyed to the shaft 96 inwardly of the arm 95. The sprocket chain 45, driven by the hereinbefore described sprocket wheel 39, has its lower end engaged with and about the sprocket wheel 97 on the stub-shaft 96 and transmits rotation to the same. Thus, with rotation of the master drum 3 by the driving gear 40, the connecting bar 94 is reciprocated in proper synchronization with the master drum 3 and the rocker arm 89 is oscillated for transmitting reciprocal movement to the feeder arm 86 carrying its pawl and ratchet assembly equipped roller 87. Thus, it will be understood that feeding of the stacked work sheets from the shelf 2 into the machine for impression or transfer from the master drum 3, in proper registration with the master copy secured to and about the periphery of said drum 3, will be effected.

The feeding of individual work sheets from the shelf 2 to the fluid supplying means 4, the assembly 5 and the master drum 3, in the order stated, whereby the same will have (1) fluid supplied thereto, (2) fluid distributed thereover for moistening them, then (3) properly registeringly engaged with the master drum carried master sheet, is controlled by a gate, generally indicated by the numeral 99. Said gate consists of a flat substantially rectangularly shaped sheet metal piece, the length of which corresponds, approximately, to the width of the oblique and upwardly extending lip 15. It is arranged directly below the lip 15 and is fixedly connected to the inner end portion of a cam engaging trip arm 100 rockably mounted on a rod 101 disposed transversely of and supported on appropriate portions of the bed side plates 7 and 8 (see Figures 1 and 3). The free inner end of the gate is flanged, as at 102, for engagement over and along the adjacent edge of the lip 15, and as will be noted, normally closes the way provided between the same and the adjacent portion of said lip. The arm 100 directly overlies the cam 98 and carries a downwardly directed cam engaging roller 103, which is maintained in constant peripheral contact with said cam by means of a tension spring 104 connected to its outer or lower end and to the adjacent portion of the bed side plate 8, at 105. Thus, with rotation of the cam 98 by the sprocket chain driven sprocket wheel 97, the cam engaging arm 100 is tripped or rocked at recurring predetermined intervals, so synchronized with the succeeding cycles or rotation of the master drum 3 as to cause a downward swinging of the free and flanged end 102 of the gate 99 away from the adjacent end of the lip 15. In this manner, a work sheet simultaneously engaged and fed forwardly over the bed shelf 2 by the reciprocating feeder arm 86, will be allowed of free sliding passage or movement upwardly over the shelf lip 15

into engagement with the fluid supplying means 4; also, this sliding passage of the work sheet will be so timed or regulated that it will thereafter reach and engage the master drum 3 carrying a master sheet (not shown) in a manner whereby the same will be accurately and precisely registered with the master sheet carried transfer matter, hence, ensure a properly positioned impression on the drum contacting surface of said work sheet.

In preparing for operation of my improved duplicating machine, proper fluid in the required amount is supplied to the tank 46 and fed to the pan 50 through the valved pipe 49. An appropriate hectograph sheet (not shown) is circumferentially engaged with and about the master drum 3 by engaging the button 34 on the extended end of the rod 31 and forcing said rod inwardly of the drum against the tension of the spring 36, whereby to cause the clamp bar 25 to be radially moved to its dotted line position shown in Figure 4. Thereupon, the proper end of the hectograph sheet is inserted into the drum provided cross-sectionally dove-tail shaped way. Thus engaged, the button 34 is disengaged, allowing the rod 31 to be returned immediately into said way and clampingly connecting the sheet end to the master drum 3.

Work sheets, i. e., sheets on which impressions or duplications from the master sheet are to be made, are stacked or otherwise arranged on the machine shelf 2. The transversely slidable guide-wall 80 is then adjusted through the screw-threaded shaft 81 and its crank 83 to cause the stacked or otherwise arranged sheets to be collectively properly positioned on the shelf 2 with relation to the duplicating mechanism of the machine.

If insufficient room or space is had on the shelf 2, the leaf extension 16 may be swung upwardly to a supported horizontal position, as shown in dotted lines in Figure 1 of the drawings.

The drawer 21 may be slid to an extended or partially extended position with relation to the normally rearward end of the machine bed whereby to satisfactorily receive duplicated sheets from the duplicating mechanism of the machine.

One mode of operation of the machine is as follows: The master drum 3 is rotated from power applied to the driving gear 40 which meshes with the driven gear 38 mounted on an adjacent end of the master drum shaft 23. Simultaneously, the driving gear 40 transmits rotary motion to the moistening roller 60, in the direction indicated. Since said moistening roller 60 has frictional peripheral engagement with the periphery of the moisture pick-up roller 54, the latter will be rotated in the indicated direction, causing its peripheral surface to be immersed in fluid contained, at the proper level, in the trough or well 50. The feed roller 63, because of its peripheral engagement with the periphery of the moistening roller 60, will also be rotatably driven thereby in the direction indicated, i. e., a direction opposite to the direction of rotation of said moistening roller. The spring loaded smooth surfaced metal squeegee roller 58, frictionally engaging the periphery of the moisture pick-up roller 54, will also be rotated in the direction indicated.

Collectively with the rotation of the various rollers of the assembly 5, in the manner above described, the sprocket chain 45 engaged about the sprocket wheel 39 mounted on the opposite end of the master drum shaft 23 is rotated over and about the sprocket wheel 97 on the stub-shaft 96, thereby rotating the cam 98, and causing the cam arm 100 to be rocked on its pivotal mounting against the tension of the tension spring 104. Such rocking movement of the cam arm 100, obviously, intermittently swings the gate 99 downwardly so as to remove its flanged end 102 from over the adjacent end of the lip 15, thereby intermittently opening the way over said lip 15 to permit the passage of an individual work sheet from the same into engagement with and between the sheet moistened roller 60 and the feed roller 63, from whence said work sheet passes into engagement with the master sheet carried by the master drum 3. As the work sheet is engaged with the master drum carried master sheet, adjacent its lower side, it will be seen that the same passes between said drum and an adjacent peripheral portion of the impression roller 65 maintained in pressured peripheral contact with the periphery of the master drum through the now tensioned contractile springs 76. Obviously, the moistened work sheet is thus engaged with the drum carried master sheet under a pressure sufficient to effect transfer of the matter on said master sheet to the adjacent and contacting surface of the work sheet. As the master drum continues in its rotation, the thus impressed work sheet is carried forwardly over and from the under side of the master drum 3 and projected or delivered into the bottom of the machine bed, particularly, into the work sheet receiving drawer 21, aforesaid. Said work sheet and the successively following ones, as will be noted, are delivered into the drawer 21 face-side-up. Consequently, the impression or duplication appearing on the sheet or sheets may be conveniently and readily inspected by the machine operator.

Work sheets stacked on the machine shelf 2 are individually and successively fed from the top of such stack into the duplicating mechanism of the machine through the reciprocating feeder or pusher arm 86 and the hereinbefore described roller 87 carried on its free and forward end. Reciprocation of said arm 86 in synchronization with the recurring cycles of rotation of the master drum 3 and the recurring opening of the gate 99 is effected by the rocker arm 89 mounted on the machine bed, connected at its opposite end to the adjacent end of said feed or pusher arm 86 and at its lower end to the longitudinally disposed connecting bar 94. Said connecting bar 94 has reciprocal motion imparted thereto from the arm 95 fixedly mounted on the inwardly disposed end of the stub-shaft 96 which, in turn, is rotated, as hereinbefore stated, from the sprocket wheel 97 engaged about by the master drum shaft driven sprocket chain 45.

Because of the spring loading or mounting of the squeegee roller 58 engaging the periphery of the fluid pick-up roller 54, it will be seen that fluid gathered on the peripheral surface of said pick-up roller will be uniformly and evenly distributed thereover and therealong.

When the improved duplicating machine is not in use, it is desirable that the impression roller 65 shall be only lightly contacted with the periphery of the master drum 3 and, to effect this, the finger engaging pieces mounted on the opposite side plates of the machine bed are rotated or turned on their respective pivotal mountings from the positions shown in dotted lines in Figure 7 of the accompanying drawings, to the positions shown in dotted lines in Figure 5 of said drawings. Consequently, upon such movement, and as hereinbefore described, the tension of the

springs 76 will be materially reduced, with the result that the impression roller 65 to which they are connected will be only lightly contacted with the master drum 3. Such light contact prevents deformation of the contacted portions of both the master drum 3 and the impression roller 65.

In the Figures 10 to 12, inclusive, of the accompanying drawings, I have shown a modified form of means for controlling the individual feeding of work sheets from the shelf 2 of the machine thereinto for engagement with and by members of the moistening and feeding assembly, hereinbefore described. Said means include a sheet metal piece or gate 106 arranged obliquely and transversely of the bed 1 between its side walls 7 and 8, as shown in said drawing figures, and pivotally mounted, intermittently of its opposite sides (inner and outer sides) by bearing devices 107 engaged in suitable bearings in appropriate portions of the plates 7 and 8. Said gate 106, as will be noted upon reference to Figures 10 and 12 of the drawings, is pivotally mounted so that it is counter-balanced by the lower and outer side portion thereof. Said outer and lower side portion of the gate normally rests on a cam bearing element 106', pivotally connected to an inner side of one of the machine side plates. By rotating the cam on its pivotal mounting, it will be seen that the extent of downward pivotal movement of the counterbalancing lower outer side of the gate 106 may be effected, and, by the same token, that the extent of upward and outward pivotal movement of the opposite or counter-balanced side of said gate will be likewise limited, the purpose of which will be hereinafter described.

The outer side of the gate is longitudinally bent, as at 108, and is substantially parallel to and juxtaposed with relation to the adjacent inner end of the bed shelf 2 (see Figures 10 and 12); also, it is arranged directly below though spaced from the lower side of the fluid pan or well 50 to permit the passage of individual work sheets from the feed end of the machine thereinto over said gate 106. The inner and upper side portion of the gate extends to a point in proximity to the point of inter-peripheral contact between the moistening roller 60 and the metal feed roller 63'.

As will be noted on reference to Figure 11, the metal feed roller 63' has a plurality of equi-spaced circumferentially extending grooves or ways 109 formed therein throughout its length, the purpose of which will be presently apparent.

Secured to the lower face of the inner side portion of the control gate 106 are a plurality of equi-spaced and parallel fingers 110, the outer ends of which are right angularly bent, as at 111, to form work sheet stops. Said fingers are of complemental shape and size, as are their respective stops 111, and are disposed transversely of the gate 106 and extend for corresponding distances beyond the inner side portion thereof, with their inner end portions and upstanding stops 111 movably engaged in the various and particularly adjacent circumferential ways 109 in the feed roller 63'. In this connection, it will be noted that the free ends of said fingers 110 and their respective stops 111 are positioned in proximity to and somewhat forwardly of the inter-contacting peripheral portions of the moistening roller 60 and the feed roller 63'; also, that said finegr carried stops 111, with arrangement of the control gate 106 in its normal position, extend from the feed roller circumferential ways 109 slightly beyond the adjacent peripheral portions of said feed roller 63', but do not contact the periphery of the moistening roller 60, as is well shown in Figure 10 of the drawings.

A trip arm 112 is fixed to one end of the control gate 106, transversely thereof, and extends inwardly for a distance into the machine bed to a point in proximity to the adjacent end of the master drum 3.

That end of the master drum mounting shaft 23 adjacent the inner and free end portion of the trip arm 112 has a collar 113 mounted on the same and secured in a particularly rotatably adjusted position by a suitable lock screw 114. A second trip arm 115 is carried by the collar 113 and extends radially therefrom to a point near the periphery of the master drum 3. The free end of this trip arm 115 rotatably carries a substantially right angularly and outwardly extending bearing roller 116. The length of the second trip arm 115 carrying the bearing roller 116 is such that when said arm is rotated along with the master drum 3, the resulting orbital path of movement of the roller 116 will cause its intermittent and recurring contact with and over the adjacent inner end portion of the first trip arm 112 carried by the inner side portion of the control gate 106, thereby depressing the same and imparting transverse pivotal movement to said control gate 106 in a direction to effect downward movement of the fingers 110 and their stops 111 into the adjacent circumferential ways 109 in the feed roller 63'. When so moved, it will be understood that the stops 111 of the gate carried fingers 110 will be moved to out-of-the-way positions, i. e., fully into the circumferential ways 109 of the feed roller 63, with the result that work sheets which had been edge engaged with said stops will thereupon be permitted to move into engagement with and between the peripheral inter-contacting portions of the moistening roller 60 and the feed roller 63', for engagement with the rotating master drum 3.

Undesirable engagement of the free ends of the finger carried stops 111, with the relatively soft or pliable peripheral surface of the moistening roller 60 will, of course, be prevented by the supporting or stop engagement of the counter-balancing lower and outer side portion of the gate 106 with the previously and properly adjusted cam 106', hereinbefore described. Obviously, rotatable adjustment of said cam 106' may be effected to bring about the desired nicety of spacing between the free ends of the finger carried stops 111 and adjacent portions of the peripheral surface of the sheet moistening roller 60. Moreover, it will be understood and appreciated that because of the counter-balanced pivotal mounting of said control gate 106, its lower or outer side portion will be normally maintained in engagement with the adjusted cam 106'. In consequence, the fingers 110 and their respective stops 111 on the inner and upper side portion of said gate 106 will be normally retained in their uppermost or "stop" positions with respect to the inter-contacted peripheral portions of the sheet moistening and feed rollers 60 and 63', respectively.

In Figures 13 and 14 of the accompanying drawings, I have shown a somewhat modified form of work sheet clamp bar and actuating means therefor. The master drum 3', having appropriate bearings 117 in its end walls, is fixedly

mounted on a shaft 23' whose opposite ends are journaled in bearings connected to the inner faces of the bed side plates 7 and 8. A portion of the drum periphery has a way formed in and longitudinally thereof throughout its length. A work sheet clamp bar 118 is adapted to be normally flushly and snugly received in the way and, as will be noted on reference to Figure 14, one longitudinal side of the bar is right angularly disposed with relation to its inner and outer faces, while the remaining longitudinal side thereof is inwardly beveled or obliqued, as at 118'. This beveled side 118' is received by a correspondingly formed side of the drum periphery provided way. A plurality of spaced openings 119 are formed in the drum adjacent the bottom of the clamp bar receiving way therein and loosely and slidably receive therethrough elongated angularly formed fingers 120 fixed at their outer ends to adjacent portions of the inner side of the clamp bar 118. The inner ends of the fingers 120 are connected to contractile coiled springs 120' anchored to a pin 121 mounted in the end walls of the master drum and extending longitudinally therethrough, as shown in Figure 13. Thus, the sheet clamp bar 118 will be normally retained flushly seated in the master drum peripheral way, in the manner shown in full lines in the Figures 13 and 14 of the accompanying drawings.

In order that the clamp bar 118 may be selectively adjusted or moved out of its seated engagement in the master drum peripheral way to permit engagement of the adjacent end of a work sheet therewith, a rod 122 is longitudinally slidably mounted, at its opposite end portions, in suitably shaped and sized bearing openings in the master drum end walls. Substantially frusto-conical cam elements 123 are formed in the rod 122 adjacent and in contact with the fingers 120. When longitudinal sliding motion is imparted to said rod 122 from its normally extended end 122', the cam elements 123 are moved over and by the contacted portions of the clamp bar connected fingers 120 in the manner indicated in dotted lines in Figure 13 of the accompanying drawings. In consequence, the fingers 120 will be laterally moved to the dotted line positions shown in Figure 14. In so moving the clamp bar 118, with its beveled side 118', said bar will be caused to ride over and outwardly of the adjacent and similarly beveled side wall of the master drum peripheral way to the dotted line position, also shown in said Figure 14, against the tension of the contractile coiled springs 120', aforesaid. Thereupon, a work sheet end or edge may be flushly engaged with and under the beveled side 118' of the clamp bar 118. When thrust pressure is removed from the end 122' of the longitudinally slidable rod 122, the latter will be immediately and automatically returned to its initial or normal position under influence of the fingers 120 and their respective tensioned contractile coiled springs 120'. At the same time, said fingers 120 and the sheet clamp bar 118 will be pulled inwardly of the master drum 3' into flushly seated engagement in the master drum peripheral way, clamping the engaged portion of said work sheet between it and the adjacent side wall of said way.

To prevent lateral flexing or bending of the inner end portions of the fingers 120 when pressure is applied thereto from the sliding cam elements 123 on the rod 122, and so, insure effectual operative movement of said cam elements over the intermediate portions of said fingers 120, the inner ends of these fingers may be and preferably are slidably engaged with and over fixed annular shoulders or bearings 124 on appropriate portions of the master drum shaft 23'.

It is deemed pertinent and timely to here note that my improved duplicating machine presents to and teaches the art much in the form of meritorious advances, advantages, benefits and novelty, amongst which there may be mentioned;

Durability and simplicity of construction and assembly;

Convenient and ready access to all working parts of the machine assembly, whereby to greatly facilitate adjustment, cleaning, repair and/or replacement of parts;

Great convenience and facility in effecting a "make-ready" of the machine for operation and/or usage;

Simplicity of operation of the machine;

Efficient and uniform supplying and distribution of fluid (hectograph solvent) to and over work sheets, thus ensuring the production of clean, sharp and faithful impressions thereon or transfers thereto from the master sheet over and throughout a material "run" of work;

Effecting face-side-up impressions on or transfers to work sheets from the master drum carried master sheet, whereby said work sheets are delivered from the drum face-side-up, and hence, may be conveniently and continuously inspected by an operator, in contradistinction to a work sheet face-side-down drum engagement and delivery, and the marked disadvantages associated therewith, and

A novel arrangement and construction of moisture distributing means and/or assembly, by means of which fluid is evenly and uniformly applied to and spread over the peripheral surface of the fluid roller without the presence thereon of excessive amounts of such fluid through the squeegeeing action of a hard and smooth surfaced roller, and then transferred to a work sheet moistening roller so positioned with relation to the master drum of the machine as to direct work sheets moistened thereby onto the lower side of said master drum for receiving impression from a prepared master sheet carried thereby, and the delivery of the impressed or duplicated work sheets from the drum face-side-up.

I claim:

1. In a duplicating machine, a bed, a rotary master drum in the bed, a horizontal fluid pan supported in the bed forwardly of the master drum, sheet moistening and feeding means cooperable with said fluid pan and master drum, a flat horizontal sheet receiving and feeding shelf supported forwardly of said bed, the moistening and feeding means and the master drum, a flat apron contiguous with and extended from the inner end of said shelf into proximity to said sheet moistening and feeding means in downwardly spaced relation to the bottom of the fluid pan and terminated adjacent the inner and free side thereof forming an inwardly opening way therebetween, a flat sheet-like piece of shape and size substantially corresponding to that of said apron pivotally mounted transversely of and on the bed below and in proximity to the lower side of the apron, the inner end of said piece being flanged upwardly and normally overlappingly engaged with the inner and adjacent side of said apron closing said inwardly opening way between the pan bottom and apron, and means operable by and from the master drum for imparting pivotal movement to said sheet-like piece

whereby to open the inwardly opening way at predetermined and recurring intervals.

2. In a duplicating machine, a bed, a rotary master drum in the bed, a horizontal fluid pan supported in the bed forwardly of the master drum, sheet moistening and feeding means cooperable with said fluid pan and said master drum, a flat horizontal sheet receiving and feeding shelf supported forwardly of said bed, the moistening and feeding means and the master drum, a flat apron contiguous with and extended upwardly from the inner end of said shelf into proximity to said sheet moistening and feeding means, said apron being arranged in downwardly spaced relation to the bottom of the fluid pan and terminated adjacent the inner and free side thereof forming an inwardly opening converging way between the same and the fluid pan bottom throughout the length thereof, a flat sheet-like piece of shape and size substantially corresponding to that of said apron pivotally mounted transversely of and on the bed below and in proximity to the lower side of the apron, the inner end of said piece being flanged upwardly and normally overlappingly engaged with the inner and adjacent side of said apron closing said inwardly opening converging way between the pan bottom and apron, and means operable by and from the master drum for imparting pivotal movement to said sheet-like piece whereby to open the inwardly opening converging way at predetermined and recurring intervals.

3. In a duplicating machine, a bed, a rotary master drum in the bed, a horizontal fluid pan supported in the bed in spaced relation to the master drum, sheet moistening and feeding means cooperable with said fluid pan and master drum, a flat horizontal sheet receiving and feeding shelf supported on the bed forwardly of the moistening and feeding means and the master drum, a flat apron contiguous with and extended from the inner end of said shelf to a point in proximity to said sheet moistening and feeding means, said apron being arranged in downwardly spaced relation to the bottom of the fluid pan and terminated adjacent the inner and free side thereof forming an inwardly opening converging way between the same and the fluid pan bottom throughout the length thereof, a flat sheet-like piece of shape and size substantially corresponding to that of said apron pivotally mounted transversely of and on the bed and below and in proximity to the lower side of the apron, the inner end of said piece being flanged and normally overlappingly engaged with the inner and adjacent side of said apron, closing said inwardly opening converging way between the pan bottom and apron, a downwardly disposed arm connected to one end portion of said sheet-like piece, spring tethering means connected to the lower and free end of said arm and to said bed, and rotatable cam means mounted in the bed in proximity to the lower end of said arm bearingly engaged by the same and rotatably driven from said master drum.

4. In a duplicating machine, a bed, a rotary master drum in the bed, a horizontal fluid pan supported in the bed forwardly of the master drum, sheet moistening and feeding means cooperable with said fluid pan and master drum, a flat horizontal sheet receiving and feeding shelf supported on the bed forwardly of the moistening and feeding means and the master drum, a flat apron extended from the inner end of said shelf upwardly to a point in proximity to and communicating with said sheet moistening and feeding means, said apron being arranged in downwardly spaced relation to the bottom of the fluid pan and terminated adjacent the inner and free side thereof forming an inwardly opening converging way between the same and the fluid pan bottom throughout the lengths thereof, a flat sheet-like piece of shape and size substantially corresponding to that of said apron pivotally mounted transversely of and on the bed below and in proximity to the lower side of the apron, stop means mounted on the inner end of said piece cooperable with said sheet feeding means whereby to control communication between the inwardly opening converging way and said sheet moistening and feeding means, a trip arm secured to a portion of said sheet-like piece extending inwardly therefrom to a point in proximity to said rotary master drum, and a second trip arm mounted on and rotatable with said rotary master drum for intermittent bearing contact with the free end of said arm.

5. In a duplicating machine, a bed, a horizontal fluid pan supported on the bed, a master drum rotatable on the bed spaced from said fluid pan, a sheet moistening roller on the bed communicating with said fluid pan, a fixedly mounted sheet feed roller on the bed peripherally contacting the periphery of said moistening roller, said feed roller having a plurality of relatively spaced circumferentially disposed ways therein, a flat horizontal sheet receiving and feeding shelf on the bed forwardly of said rollers and the master drum, a flat apron contiguous with and extended from the inner side of said shelf into proximity to said rollers and communicating therewith, said apron being arranged in downwardly spaced relation to the bottom of the fluid pan and terminated adjacent the inner and free side thereof forming an inwardly opening converging way between the same and the fluid pan bottom throughout the lengths thereof, a flat sheet-like piece of shape and size substantially corresponding to that of said apron pivotally mounted transversely of and on the bed and below and in proximity to the lower side of the apron, stop means on the inner side of said sheet-like piece engageable, at times, in the circumferentially disposed ways in the feed roller, and means operable with rotation of said master drum for intermittently imparting pivotal movement to said sheet-like piece and stop means whereby to move the latter with relation to the circumferentially disposed ways in said feed roller.

ARTHUR H. GEIB.

REFERENCES CITED

The following references are of record in the file of this patent:

UNITED STATES PATENTS

Number	Name	Date
2,051,376	Hernlund et al.	Aug. 18, 1936
2,185,188	Flanigan	Jan. 2, 1940
2,212,659	Costello	Aug. 27, 1940
2,231,109	Breuer et al.	Feb. 11, 1941
2,231,291	Morrison	Feb. 11, 1941
2,237,548	Copeland et al.	Apr. 8, 1941
2,264,578	Marchev	Dec. 2, 1941
2,271,954	Rockhill	Feb. 3, 1942
2,288,287	Kokay	June 30, 1942
2,340,327	Jagger et al.	Feb. 1, 1944
2,364,942	Bradt	Dec. 12, 1944
2,389,848	Gibson et al.	Nov. 27, 1945
2,411,881	Janke	Dec. 3, 1946